YASKAWA

Σ-X-Series AC Servo Drive

Σ-XS SERVOPACK with EtherCAT Communications References

Product Manual

Model: SGDXS-□□□□A0□

Basic Information on SERVOPACKs 1

Selecting a SERVOPACK 2

SERVOPACK Installation 3

Wiring and Connecting SERVOPACKs 4

Basic Functions That Require Setting before Operation 5

Application Functions 6

Trial Operation and Actual Operation 7

Tuning 8

Monitoring 9

Fully-Closed Loop Control 10

Σ-LINK II Function 11

Safety Functions 12

EtherCAT Communications 13

CiA402 Drive Profile 14

Object Dictionary 15

Maintenance 16

Parameter and Object Lists 17

Appendices 18

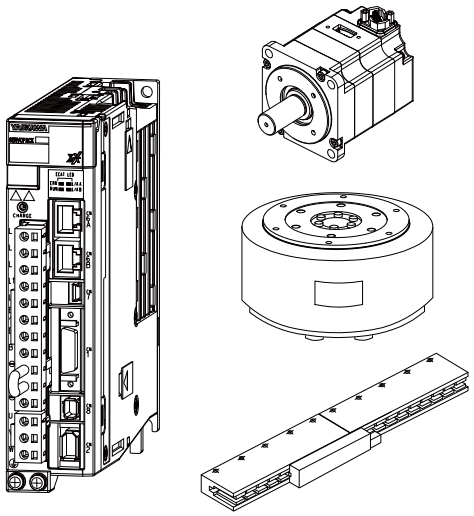

MANUAL NO. SIEP C710812 02G

Table of Contents

i. Preface and General Precautions 23

i.1 About this Manual 24

i.2 Target Readers. 25

i.3 Outline of Manual 26

i.4 Related Documents 27

i.4.1 Related Documents. 28

i.5 Using This Manual 32

i.5.1 Technical Terms Used in This Manual 32

i.5.2 Differences in Terms for Rotary Servomotors and Linear Servomotors 32

i.5.3 Notation Used in this Manual 33

i.5.4 Engineering Tools Used in This Manual. 34

i.5.5 Trademarks 34

i.5.6 Visual Aids 34

i.6 Safety Precautions. 36

i.6.1 Safety Information 36

i.6.2 Safety Precautions That Must Always Be Observed 36

i.7 Warranty 46

i.7.1 Details of Warranty 46

i.7.2 Limitations of Liability 46

i.7.3 Suitability for Use 46

i.7.4 Specifications Change 47

i.8 Compliance with UL Standards, EU Directives, and Other Safety Standards 48

i.8.1 North American Safety Standards (UL) 48

i.8.2 EU Directives. 48

i.8.3 UK Conformity Assessed (UKCA) 49

i.8.4 Safety Standards. 49

1. Basic Information on SERVOPACKs 51

1.1 The Σ-X Series 52

1.2 Interpreting the Nameplate 53
1.3 Part Names 54
1.4 Interpreting Model Numbers 56
1.4.1 Interpreting SERVOPACK Model Numbers 56
1.4.2 Interpreting Servomotor Model Numbers 57
1.5 Combinations of SERVOPACKs and Servomotors 59
1.5.1 Combinations of Rotary Servomotors and SERVOPACKs 59
1.5.2 Combinations of Direct Drive Servomotors and SERVOPACKs 62
1.5.3 Combinations of Linear Servomotors and SERVOPACKs 64
1.6 Functions 66
1.6.1 Function Support by Software Version 68

2. Selecting a SERVOPACK 69
2.1 Ratings and Specifications 70
2.1.1 Ratings 70
2.1.2 SERVOPACK Overload Protection Characteristics 74
2.1.3 Specification 75
2.2 Block Diagrams 79
2.2.1 SGDXS-R70A, -R90A, -1R6A 79
2.2.2 SGDXS-2R8A 79
2.2.3 SGDXS-3R8A 80
2.2.4 SGDXS-5R5A, -7R6A 80
2.2.5 SGDXS-120A 81
2.2.6 SGDXS-180A, -200A 82
2.2.7 SGDXS-330A 83
2.2.8 SGDXS-470A, -550A 84
2.2.9 SGDXS-590A, -780A 85
2.2.10 SGDXS-1R9D, -3R5D, -5R4D, -8R4D, -120D, -170D 85
2.2.11 SGDXS-210D, -260D, -280D, -370D 86
2.3 External Dimensions 87
2.3.1 Front Cover Dimensions and Connector Specifications 87
2.3.2 SERVOPACK External Dimensions 88
2.4 Examples of Standard Connections between SERVOPACKs and Peripheral Devices 98
2.4.1 Rotary Servomotor 98
2.4.2 Linear Servomotor 100

3. SERVOPACK Installation 103

3.1 Installation Precautions . . . 104
3.2 Mounting Types and Orientation . . . 105
3.3 Mounting Hole Dimensions . . . 106
3.3.1 Σ-X-series Mounting Hole Dimensions . . . 106
3.4 Mounting Interval . . . 107
3.4.1 Installing One SERVOPACK in a Control Panel . . . 107
3.4.2 Installing More Than One SERVOPACK in a Control Panel . . . 107
3.5 Monitoring the Installation Environment . . . 108
3.6 Derating Specifications . . . 109
3.6.1 SGDXS-R70A, -R90A, -1R6A, -2R8A . . . 109
3.6.2 SGDXS-3R8A, -5R5A, -7R6A, -120A, -180A, -200A, -330A, -470A, -550A, -590A, -780A . . . 109
3.6.3 SGDXS-□□□D . . . 109
3.7 EMC Installation Conditions . . . 110
3.7.1 Three-Phase, 200 VAC . . . 110
3.7.2 Single-Phase, 200 VAC . . . 111
3.7.3 270 VDC . . . 112
3.7.4 Three-Phase, 400 VAC . . . 113
3.7.5 540 VDC . . . 114

4. Wiring and Connecting SERVOPACKs . . . 115
4.1 Wiring and Connecting SERVOPACKs . . . 117
4.1.1 General Precautions . . . 117
4.1.2 Countermeasures against Noise . . . 119
4.1.3 Grounding . . . 122
4.2 Basic Wiring Diagrams . . . 123
4.2.1 SGDXS-□□□A . . . 124
4.2.2 SGDXS-□□□D . . . 125
4.3 Wiring the Power Supply to the SERVOPACK . . . 127
4.3.1 Terminal Symbols and Terminal Names . . . 127
4.3.2 Wiring Procedure for Main Circuit Connector . . . 130
4.3.3 Power ON Sequence . . . 132
4.3.4 Power Supply Wiring Diagrams . . . 133
4.3.5 Wiring Regenerative Resistors . . . 139
4.3.6 Wiring Reactors for Harmonic Suppression . . . 141
4.4 Wiring Servomotors . . . 143
4.4.1 Terminal Symbols and Terminal Names . . . 143
4.4.2 Pin Layout of Connector for Encoder Cables (CN2) . . . 143
4.4.3 Wiring the SERVOPACK to the Encoder . . . 144

4.4.4 Wiring the SERVOPACK to the Holding Brake . . . 152

4.5 I/O Signal Connections . . . 153

4.5.1 I/O Signal Connector (CN1) Names and Functions. . . . 153

4.5.2 I/O Signal Connector (CN1) Pin Layout . . . 155

4.5.3 I/O Signal Wiring Examples . . . 156

4.5.4 I/O Circuits . . . 157

4.6 Connecting Safety Function Signals . . . 160

4.6.1 Pin Layout of Safety Function Signals (CN8). . . . 160

4.6.2 I/O Circuits . . . 160

4.7 Connecting EtherCAT Communications Cables . . . 162

4.8 Connecting the SigmaWin+ . . . 163

4.9 Connecting a Digital Operator. . . . 164

4.10 Using the Analog Monitors . . . 165

5. Basic Functions That Require Setting before Operation . . . 167

5.1 Manipulating SERVOPACK Parameters (Pn□□□) . . . 170

5.1.1 Classifications of SERVOPACK Parameters . . . 170

5.1.2 Notation for Parameters . . . 170

5.1.3 Setting Methods for SERVOPACK Parameters. . . . 172

5.1.4 Write Prohibition Setting for SERVOPACK Parameters . . . 173

5.1.5 Initializing SERVOPACK Parameter Settings . . . 176

5.2 Power Supply Type Settings for the Main Circuit and Control Circuit. . . . 178

5.2.1 AC Power Supply Input/DC Power Supply Input Setting . . . 178

5.2.2 Single-phase AC Power Supply Input/Three-phase AC Power Supply Input Setting . . . 179

5.3 Automatic Detection of Connected Motor . . . 180

5.4 Motor Direction Setting . . . 181

5.4.1 Rotary Servomotors. . . . 181

5.4.2 Linear Servomotors . . . 181

5.5 Setting the Linear Encoder Pitch . . . 183

5.6 Writing Linear Servomotor Parameters . . . 184

5.6.1 Precautions . . . 184

5.6.2 Applicable Tools. . . . 184

5.6.3 Operating Procedure . . . 184

5.6.4 Confirming If the Motor Constants Have Been Written . . . 187

5.7 Selecting the Phase Sequence for a Linear Servomotor . . . 188

5.7.1 Related Parameters. . . . 188

5.7.2 Operating Procedure . . . 188

5.8 Polarity Sensor Setting . . . 190
5.9 Polarity Detection. . . . 191
5.9.1 Restrictions . . . 191
5.9.2 Using the Servo ON Command (Enable Operation Command) to Perform Polarity Detection . . . 192
5.9.3 Using a Tool Function to Perform Polarity Detection . . . 192
5.10 Overtravel Function and Settings . . . 194
5.10.1 Overtravel Signals . . . 194
5.10.2 Setting to Enable/Disable Overtravel . . . 195
5.10.3 Motor Stopping Method for Overtravel . . . 195
5.10.4 Overtravel Alarms . . . 196
5.10.5 Overtravel Warnings . . . 197
5.10.6 Behavior Selection after Overtravel Release . . . 198
5.10.7 Overtravel Status . . . 199
5.10.8 Overtravel Operation by Mode . . . 199
5.11 Holding Brake . . . 200
5.11.1 Brake Operating Sequence. . . . 200
5.11.2 /BK (Brake Output) Signal . . . 201
5.11.3 Output Timing of /BK (Brake Output) Signal When the Servomotor Is Stopped . . . 202
5.11.4 Output Timing of /BK (Brake Output) Signal When the Servomotor Is Operating . . . 202
5.12 Motor Stopping Methods for Servo OFF and Alarms . . . 204
5.12.1 Stopping Method for Servo OFF . . . 204
5.12.2 Servomotor Stopping Method for Alarms . . . 205
5.13 Motor Overload Detection Level . . . 207
5.13.1 Detection Timing for Overload Warnings (A.910) . . . 207
5.13.2 Detection Timing for Overload Alarms (A.720) . . . 207
5.14 Setting Unit Systems . . . 209
5.14.1 Position Reference Unit Setting . . . 209
5.14.2 Electronic Gear Ratio Setting Examples . . . 213
5.14.3 Setting the Speed Reference Unit . . . 214
5.14.4 Setting the Acceleration Reference Unit . . . 215
5.14.5 Setting the Torque Reference Unit . . . 215
5.15 Resetting the Absolute Encoder . . . 217
5.15.1 Precautions on Resetting . . . 217
5.15.2 Preparations. . . . 217
5.15.3 Applicable Tools . . . 217
5.15.4 Operating Procedure . . . 218
5.16 Setting the Origin of the Absolute Encoder . . . 220
5.16.1 Absolute Encoder Origin Offset . . . 220
5.16.2 Setting the Origin of the Absolute Linear Encoder . . . 220

5.17 Setting the Regenerative Resistor Capacity 223
5.18 Σ-V/Σ-7 Compatible Function and Settings 225
5.18.1 Setting the Encoder Resolution Compatibility Selection 225

6. Application Functions 227
6.1 Changing Allocations of I/O Signals 230
6.1.1 Changing Allocations of I/O Signals 230
6.1.2 I/O Signal Allocations 232
6.1.3 Input Signal Allocations 232
6.1.4 Output Signal Allocations 234
6.1.5 ALM (Servo Alarm Output) Signal 236
6.1.6 /WARN (Warning Output) Signal 237
6.1.7 /TGON (Rotation Detection Output) Signal 237
6.1.8 /S-RDY (Servo Ready Output) Signal 238
6.1.9 /V-CMP (Speed Coincidence Detection Output) Signal 239
6.1.10 /COIN (Positioning Completion Output) Signal 240
6.1.11 /NEAR (Near Output) Signal 241
6.1.12 Speed Limit during Torque Control 242
6.2 Operation for Momentary Power Interruptions 244
6.3 SEMI F47 Function 245
6.3.1 Execution Sequence 245
6.3.2 Related Parameters 246
6.4 Setting the Maximum Motor Speed 247
6.5 Encoder Divided Pulse Output 248
6.5.1 Encoder Divided Pulse Output Signals 248
6.5.2 Setting for the Encoder Divided Pulse Output 252
6.6 Software Limits 255
6.7 Selecting Torque Limits 256
6.7.1 Internal Torque Limits 256
6.7.2 External Torque Limits 257
6.7.3 /CLT (Torque Limit Detection Output) Signal 260
6.8 Absolute Encoders 261
6.8.1 Connecting an Absolute Encoder 262
6.8.2 Structure of the Position Data of the Absolute Encoder 262
6.8.3 Output Ports for the Position Data from the Absolute Encoder 262
6.8.4 Reading the Position Data from the Absolute Encoder 263
6.8.5 Transmission Specifications 264
6.8.6 Calculating the Current Position in Machine Coordinates 264
6.8.7 Multiturn Limit Setting 265

6.8.8 A.CC0 (Multiturn Limit Disagreement Alarm) 266

6.9 Absolute Linear Encoders 270

6.9.1 Connecting an Absolute Linear Encoder 270

6.9.2 Structure of the Position Data of the Absolute Linear Encoder 270

6.9.3 Output Ports for the Position Data from the Absolute Linear Encoder 270

6.9.4 Reading the Position Data from the Absolute Linear Encoder 271

6.9.5 Transmission Specifications 272

6.9.6 Calculating the Current Position in Machine Coordinates 273

6.10 Software Reset 274

6.10.1 Preparations 274

6.10.2 Applicable Tools 274

6.10.3 Operating Procedure 274

6.11 Vibration Detection Level Initialization 276

6.11.1 Preparations 276

6.11.2 Applicable Tools 276

6.11.3 Operating Procedure 277

6.11.4 Related Parameters 278

6.12 Adjusting the Motor Current Detection Signal Offset 279

6.12.1 Automatic Adjustment 279

6.12.2 Manual Adjustment 281

6.13 Forcing the Motor to Stop 283

6.13.1 FSTP (Forced Stop Input) Signal 283

6.13.2 Stopping Method Selection for Forced Stops 283

6.13.3 Resetting Method for Forced Stops 284

6.14 Overheat Protection 286

6.14.1 Connecting the Overheat Protection Input (TH) Signal 286

6.14.2 Overheat Protection Selections 288

6.15 Triggers at Preset Positions 289

6.15.1 Outline 289

6.15.2 I/O Signal Connector (CN1) Pin Layout 290

6.15.3 Procedure to Use Triggers at Preset Positions 291

6.16 Rotational Coordinate System 297

6.16.1 Outline 297

6.16.2 Block Diagrams 298

6.16.3 Supported Modes of Operation When the Rotational Coordinate System Is Enabled 298

6.16.4 Setup Procedure 298

6.17 Specifying Output Status When a Host Communications Error Occurs 302

6.17.1 Function Selections for Specifying Output Status When a Host Communications Error Occurs 302

6.17.2 Precautions 302

6.18 Soft Start Settings 304
6.19 Reference Filters 305
6.19.1 Speed Reference Filter 305
6.19.2 Average Position Reference Movement Filter 305

7. Trial Operation and Actual Operation 307
7.1 Flow of Trial Operation 308
7.1.1 Flow of Trial Operation for Rotary Servomotors 308
7.1.2 Flow of Trial Operation for Linear Servomotors 309
7.2 Inspections and Confirmations before Trial Operation 312
7.3 Trial Operation for the Servomotor without a Load 313
7.3.1 Preparations 313
7.3.2 Applicable Tools 314
7.3.3 Operating Procedure 314
7.4 Trial Operation with EtherCAT Communications 316
7.5 Trial Operation with the Servomotor Connected to the Machine 317
7.5.1 Precautions 317
7.5.2 Preparations 317
7.5.3 Operating Procedure 318
7.6 Convenient Function to Use during Trial Operation 319
7.6.1 Program Jogging 319
7.6.2 Origin Search 324
7.6.3 Test without a Motor 326

8. Tuning 331
8.1 Overview and Flow of Tuning 335
8.1.1 Tuning Functions 336
8.1.2 Diagnostic Tool 337
8.2 Monitoring Methods 338
8.3 Precautions to Ensure Safe Tuning 339
8.3.1 Overtravel Settings 339
8.3.2 Torque Limit Settings 339
8.3.3 Setting the Position Deviation Overflow Alarm Level 339
8.3.4 Vibration Detection Level Setting 341
8.3.5 Setting the Position Deviation Overflow Alarm Level at Servo ON 341
8.4 Tuning-less Function 343
8.4.1 Application Restrictions 343

8.4.2 Operating Procedure . . . 344
8.4.3 Troubleshooting Alarms . . . 346
8.4.4 Parameters Disabled by Tuning-less Function . . . 346
8.4.5 Automatically Adjusted Function Setting . . . 347
8.4.6 Related Parameters . . . 347

8.5 Moment of Inertia Estimation without a Host Reference . . . 348
8.5.1 Outline . . . 348
8.5.2 Restrictions . . . 348
8.5.3 Applicable Tools . . . 349
8.5.4 Operating Procedure . . . 349

8.6 Moment of Inertia Estimation with a Host Reference . . . 365
8.6.1 Outline . . . 365
8.6.2 Restrictions . . . 365
8.6.3 Applicable Tools . . . 366
8.6.4 Operating Procedure . . . 366

8.7 Autotuning without a Host Reference . . . 369
8.7.1 Outline . . . 369
8.7.2 Restrictions . . . 370
8.7.3 Applicable Tools . . . 371
8.7.4 Operating Procedure . . . 371
8.7.5 Operating Procedure for Multi-Axis Simultaneous Tuning . . . 376
8.7.6 Troubleshooting Problems in Autotuning without a Host Reference . . . 383
8.7.7 Automatically Adjusted Function Setting . . . 384
8.7.8 Related Parameters . . . 386

8.8 Autotuning with a Host Reference . . . 388
8.8.1 Outline . . . 388
8.8.2 Restrictions . . . 388
8.8.3 Applicable Tools . . . 389
8.8.4 Operating Procedure . . . 389
8.8.5 Operating Procedure for Multi-Axis Simultaneous Tuning . . . 393
8.8.6 Troubleshooting Problems in Autotuning with a Host Reference . . . 399
8.8.7 Automatically Adjusted Function Setting . . . 400
8.8.8 Related Parameters . . . 401

8.9 Custom Tuning . . . 402
8.9.1 Outline . . . 402
8.9.2 Preparations . . . 402
8.9.3 Applicable Tools . . . 403
8.9.4 Operating Procedure . . . 403
8.9.5 Automatically Adjusted Function Setting . . . 408
8.9.6 Tuning Example for Tuning Mode 2 or 3 . . . 408
8.9.7 Related Parameters . . . 409

8.10 Anti-Resonance Control Adjustment 411
8.10.1 Outline 411
8.10.2 Preparations. 411
8.10.3 Applicable Tools. 411
8.10.4 Operating Procedure 412
8.10.5 Related Parameters. 415
8.10.6 Suppressing Different Vibration Frequencies with Anti-resonance Control. 415
8.11 Vibration Suppression 417
8.11.1 Outline 417
8.11.2 Preparations. 418
8.11.3 Applicable Tools. 418
8.11.4 Operating Procedure 418
8.11.5 Setting Combined Functions. 420
8.11.6 Related Parameters. 420
8.12 Speed Ripple Compensation 421
8.12.1 Outline 421
8.12.2 Speed Ripple Compensation when a Rotary Servomotor Is Connected 421
8.12.3 Speed Ripple Compensation when a Linear Servomotor Is Connected 427
8.12.4 Speed Ripple Compensation during Torque Control Mode and during Torque Limits 439
8.12.5 Parameter Settings 440
8.13 Load Fluctuation Compensation Control 443
8.13.1 Outline 443
8.13.2 Application Restrictions. 443
8.13.3 Preparations. 443
8.13.4 Required Parameter Settings 443
8.13.5 Operating Procedure 444
8.13.6 Parameters Disabled by a Load Fluctuation Compensation Control 444
8.14 Less-Deviation Control Function 446
8.14.1 Outline 446
8.14.2 Restrictions 447
8.14.3 Preparations. 447
8.14.4 Tuning Flow 448
8.14.5 Adjustment Example 450
8.14.6 Gain Switching Combinations. 453
8.14.7 Gain Selection Method 454
8.14.8 Monitor the Position Deviation after the Position Reference Filter. 454
8.15 Additional Adjustment Functions 455
8.15.1 Gain Switching. 455
8.15.2 Friction Compensation 460
8.15.3 Gravity Compensation. 462
8.15.4 Output Torque Compensation. 463

8.15.5 Current Control Mode Selection . . . 464
8.15.6 Current Gain Level Setting . . . 464
8.15.7 Speed Detection Method Selection . . . 464
8.15.8 Speed Feedback Filter . . . 465
8.15.9 Backlash Compensation . . . 465

8.16 Manual Tuning . . . 471
8.16.1 Tuning the Servo Gains . . . 471
8.16.2 Compatible Adjustment Functions . . . 485

8.17 Diagnostic Tool . . . 489
8.17.1 Mechanical Analysis . . . 489
8.17.2 Easy FFT . . . 490

9. Monitoring . . . 495

9.1 Monitoring Product Information . . . 496
9.1.1 Items That You Can Monitor . . . 496
9.1.2 Operating Procedure . . . 496

9.2 Monitoring SERVOPACK Status . . . 498
9.2.1 Servo Drive Information . . . 498
9.2.2 Operation Monitor, Status Monitor, and I/O Monitor . . . 498
9.2.3 I/O Signals Status Monitor . . . 504

9.3 Monitoring Machine Operation Status and Signal Waveforms . . . 506
9.3.1 Items That You Can Monitor . . . 506
9.3.2 Using the SigmaWin+ . . . 506
9.3.3 Using the Analog Monitors . . . 509

9.4 Monitoring Product Life . . . 514
9.4.1 Items That You Can Monitor . . . 514
9.4.2 Operating Procedure . . . 514
9.4.3 Preventative Maintenance . . . 515

9.5 Alarm Tracing . . . 517
9.5.1 Data for Which Alarm Tracing Is Performed . . . 517
9.5.2 Applicable Tools . . . 517

9.6 Error Detection Setting . . . 518
9.6.1 Outline . . . 518
9.6.2 Preparing Trace Data to Create Sample Data . . . 518
9.6.3 Creating Sample Data and Setting the Error Judgment Baseline . . . 519
9.6.4 Executing Error Detection . . . 523

10. Fully-Closed Loop Control . . . 525

10.1 Fully-Closed System 526
10.2 SERVOPACK Commissioning Procedure 527
10.3 Parameter Settings for Fully-Closed Loop Control 529
10.3.1 Parameters to Set and Reference Information 529
10.3.2 Control Block Diagram for Fully-Closed Loop Control. 529
10.3.3 Setting the Motor Rotation Direction and the Machine Movement Direction 530
10.3.4 Setting the Number of External Encoder Scale Pitches 531
10.3.5 Setting the PAO, PBO, and PCO (Encoder Divided Pulse Output) Signals. 531
10.3.6 External Absolute Encoder Data Reception Sequence 532
10.3.7 Setting Unit Systems 532
10.3.8 Alarm Detection Settings. 532
10.3.9 Analog Monitor Signal Settings. 533
10.3.10 Setting to Use an External Encoder for Speed Feedback. 535
10.4 Monitoring an External Encoder 536
10.4.1 Option Module Required for Monitoring 536
10.4.2 Related Parameters. 536
10.4.3 Monitoring the Current Value of the External Encoder from the Host Controller 536
10.4.4 Block Diagrams 536

11. Σ-LINK II Function 539
11.1 Outline 540
11.2 Devices That Support Σ-LINK II 541
11.3 Procedure to Use Σ-LINK II 542
11.4 Connecting Devices to the SERVOPACK 544
11.4.1 Using a Direct Connection between the SERVOPACK and Servomotor. 544
11.4.2 Connecting Multiple Devices to the SERVOPACK 544
11.5 Performing Self-Configuration 545
11.5.1 Preparations. 545
11.5.2 Applicable Tools. 545
11.5.3 Operating Procedure 545
11.5.4 Troubleshooting If an Error Code Is Displayed 547
11.6 Specifying the Servomotor (Semi-Closed Encoder) to Drive 550
11.6.1 Operating Procedure 550
11.7 Configuring the Σ-LINK II Data Settings 552
11.7.1 Monitoring the Input Signals of Connected Devices with the SigmaWin+ 552
11.7.2 Monitoring the Input Signals of Connected Devices from the Host Controller. 555
11.7.3 Allocating Input Signals of Connected Devices to SERVOPACK Functions and Using those Signals 555
11.7.4 Configuring Settings to Output Signals from Connected Devices 560

11.8 Changing Detection Conditions of Alarms Related to Σ-LINK II 565
11.8.1 Connected Node Change Detection Condition 565
11.8.2 Σ-LINK II I/O Device Error Detection Selection 565

12. Safety Functions 567
12.1 Introduction to the Safety Functions 568
12.1.1 Safety Functions 568
12.1.2 Precautions for Safety Functions 568
12.2 Hard Wire Base Block (HWBB). 569
12.2.1 Risk Assessment 569
12.2.2 Hard Wire Base Block (HWBB) State. 570
12.2.3 Resetting the HWBB State 570
12.2.4 Recovery Method. 571
12.2.5 Detecting Errors in HWBB Signal 572
12.2.6 HWBB Input Signal Specifications 572
12.2.7 Operation without a Host Controller 572
12.2.8 /S-RDY (Servo Ready Output) Signal 573
12.2.9 /BK (Brake Output) Signal. 573
12.2.10 Stopping Methods 574
12.2.11 ALM (Servo Alarm) Signal. 574
12.3 EDM1 (External Device Monitor) 575
12.3.1 EDM1 Output Signal Specifications 575
12.4 Applications Examples for Safety Functions 576
12.4.1 Connection Example 576
12.4.2 Failure Detection Method 576
12.4.3 Procedure. 577
12.5 Validating Safety Functions. 578
12.6 Connecting a Safety Function Device 579
12.7 Advanced Safety Module 580

13. EtherCAT Communications. 581
13.1 Introduction to EtherCAT 582
13.1.1 Introduction to CANopen. 582
13.1.2 CANopen over EtherCAT OSI Model 582
13.1.3 Sending and Receiving Data in EtherCAT Communications 583
13.1.4 EtherCAT Terminology 583
13.1.5 Data Type. 584
13.1.6 Data Units. 584

13.1.7 Subindex Number Notation . . . 584
13.2 EtherCAT Slave Information . . . 585
13.3 EtherCAT State Machine . . . 586
13.4 EtherCAT Communications Settings . . . 588
13.4.1 Explicit Device Identification . . . 588
13.4.2 Normal Device Recognition Process at Startup . . . 588
13.5 PDO Mappings . . . 589
13.5.1 Setting Procedure for PDO Mappings . . . 589
13.5.2 Default PDO Mappings . . . 590
13.6 Synchronization with Distributed Clocks . . . 591
13.6.1 Example of PDO Data Exchange Timing in DC Mode . . . 592
13.7 Emergency Messages . . . 594

14. CiA402 Drive Profile . . . 595
14.1 Device Control . . . 596
14.1.1 State Machine Control Commands . . . 597
14.1.2 Bits in Statusword (6041h) . . . 597
14.1.3 Related Objects . . . 597
14.2 Modes of Operation . . . 599
14.2.1 Related Objects . . . 599
14.2.2 Dynamic Mode Changes . . . 599
14.3 Position Control Modes . . . 600
14.3.1 Profile Position Mode . . . 600
14.3.2 Interpolated Position Mode . . . 603
14.3.3 Cyclic Synchronous Position Mode . . . 607
14.4 Homing . . . 609
14.4.1 Related Objects . . . 609
14.4.2 Homing Method (6098h) . . . 609
14.5 Velocity Control Modes . . . 612
14.5.1 Profile Velocity Mode . . . 612
14.5.2 Cyclic Synchronous Velocity Mode . . . 613
14.6 Torque Control Modes . . . 614
14.6.1 Profile Torque Mode . . . 614
14.6.2 Cyclic Sync Torque Mode . . . 615
14.7 Torque Limits . . . 616
14.7.1 Related Objects . . . 616
14.8 Digital I/O Signals . . . 617

14.9 Touch Probe . . . 618
14.9.1 Related Objects . . . 618
14.9.2 Example of Execution Procedure for a Touch Probe . . . 618
14.10 Fully-Closed Loop Control . . . 620

15. Object Dictionary . . . 621
15.1 Object Dictionary List . . . 625
15.2 General Objects . . . 630
15.2.1 Device Type (1000h) . . . 630
15.2.2 Error Register (1001h) . . . 630
15.2.3 Manufacturer Device Name (1008h) . . . 630
15.2.4 Manufacturer Software Version (100Ah) . . . 630
15.2.5 Store Parameters (1010h) . . . 631
15.2.6 Restore Default Parameters (1011h) . . . 631
15.2.7 Identity Object (1018h) . . . 632
15.3 PDO Mapping Objects . . . 633
15.3.1 Receive PDO Mapping (1600h to 1603h) . . . 634
15.3.2 Transmit PDO Mapping (1A00h to 1A03h) . . . 638
15.4 Sync Manager Communication Objects . . . 642
15.4.1 Sync Manager Communication Type (1C00h) . . . 642
15.4.2 Sync Manager PDO Assignment (1C10h-1C13h) . . . 642
15.4.3 Sync Manager Synchronization (1C32h, 1C33h) . . . 643
15.4.4 Sync Error Settings (10F1h) . . . 645
15.5 Manufacturer Specific Objects . . . 647
15.5.1 SERVOPACK Parameters (2000h to 26FFh) . . . 647
15.5.2 User Parameter Configuration (2700h) . . . 647
15.5.3 Position User Unit (2701h) . . . 647
15.5.4 Velocity User Unit (2702h) . . . 648
15.5.5 Acceleration User Unit (2703h) . . . 648
15.5.6 Torque User Unit (2704h) . . . 648
15.5.7 SERVOPACK Adjusting Command (2710h) . . . 649
15.5.8 Manufacturer Interpolation Data Configuration for 1st Profile (2730h) (Mode 2 Object) . . . 652
15.5.9 Manufacturer Interpolation Data Configuration for 2nd Profile (2731h) (Mode 2 Object) . . . 653
15.5.10 Interpolation Profile Select (2732h) (Mode 2 Object) . . . 654
15.5.11 Interpolation Data Read/Write Pointer Position Monitor (2741h) (Mode 2 Object) . . . 655
15.5.12 Sensing Data Monitor (2770h, 2771h, 2772h) . . . 655
15.5.13 Σ-LINK II Data Monitor (2773h, 2774h) . . . 657
15.5.14 Controlword_VenderS (2776h) . . . 658
15.5.15 Output Position Setting (2778h) . . . 659
15.5.16 Output Function Setting (2779h) . . . 659

15.5.17 Output Time Setting (277Ah) . . . 659
15.5.18 Output Distance Setting (277Bh) . . . 659
15.5.19 Output Position Correction Setting (277Ch) . . . 659
15.5.20 Interpolation Data Record for 1st Profile (27C0h) (Mode 2 Object) . . . 660
15.5.21 Interpolation Data Record for 2nd Profile (27C1h) (Mode 2 Object) . . . 660

15.6 Device Control . . . 661
15.6.1 Error Code (603Fh) . . . 661
15.6.2 Controlword (6040h) . . . 661
15.6.3 Statusword (6041h) . . . 663
15.6.4 Quick Stop Option Code (605Ah) . . . 666
15.6.5 Shutdown Option Code (605Bh) . . . 666
15.6.6 Disable Operation Option Code (605Ch) . . . 667
15.6.7 Halt Option Code (605Dh) . . . 667
15.6.8 Fault Reaction Option Code (605Eh) . . . 667
15.6.9 Modes of Operation (6060h) . . . 668
15.6.10 Modes of Operation Display (6061h) . . . 668
15.6.11 Supported Drive Modes (6502h) . . . 668

15.7 Profile Position Mode . . . 670
15.7.1 Target Position (607Ah) . . . 670
15.7.2 Software Position Limit (607Dh) . . . 670
15.7.3 Max Profile Velocity (607Fh) . . . 670
15.7.4 Profile Velocity (6081h) . . . 671
15.7.5 Profile Acceleration (6083h) . . . 671
15.7.6 Profile Deceleration (6084h) . . . 671
15.7.7 Quick Stop Deceleration (6085h) . . . 671

15.8 Homing Mode . . . 672
15.8.1 Home Offset (607Ch) . . . 672
15.8.2 Homing Method (6098h) . . . 672
15.8.3 Homing Speeds (6099h) . . . 673
15.8.4 Homing Acceleration (609Ah) . . . 673

15.9 Position Control Function . . . 674
15.9.1 Position Demand Value (6062h) . . . 674
15.9.2 Position Actual Internal Value (6063h) . . . 674
15.9.3 Position Actual Value (6064h) . . . 674
15.9.4 Position Demand Internal Value (60FCh) . . . 674
15.9.5 Following Error Window (6065h) . . . 674
15.9.6 Following Error Time Out (6066h) . . . 675
15.9.7 Following Error Actual Value (60F4h) . . . 675
15.9.8 Position Window (6067h) . . . 675
15.9.9 Position Window Time (6068h) . . . 675
15.9.10 Position Offset (60B0h) . . . 675
15.9.11 Additional Position Actual Value (60E4h) . . . 676

15.9.12 Position Range Limit (607Bh) . . . 676
15.9.13 Position Option Code (60F2h) . . . 676
15.10 Interpolated Position Mode . . . 677
15.10.1 Interpolation Submode Select (60C0h) (Object Shared by Mode 1 and Mode 2) . . . 677
15.10.2 Interpolation Data Record (60C1h) (Object Shared by Mode 1 and Mode 2) . . . 677
15.10.3 Interpolation Time Period (60C2h) (Object Shared by Mode 1 and Mode 2) . . . 677
15.11 Cyclic Synchronous Position Mode . . . 679
15.11.1 Velocity Offset (60B1h) . . . 679
15.11.2 Torque Offset (60B2h) . . . 679
15.12 Profile Velocity/Cyclic Synchronous Velocity Mode . . . 680
15.12.1 Velocity Demand Value (606Bh) . . . 680
15.12.2 Velocity Actual Value (606Ch) . . . 680
15.12.3 Velocity Window (606Dh) . . . 680
15.12.4 Velocity Window Time (606Eh) . . . 680
15.12.5 End Velocity (6082h) . . . 680
15.12.6 Target Velocity (60FFh) . . . 681
15.13 Profile Torque/Cyclic Synchronous Torque Mode . . . 682
15.13.1 Target Torque (6071h) . . . 682
15.13.2 Torque Demand Value (6074h) . . . 682
15.13.3 Torque Slope (6087h) . . . 682
15.13.4 Motor Rated Torque (6076h) . . . 682
15.13.5 Torque Actual Value (6077h) . . . 682
15.13.6 Current Actual Value (6078h) . . . 683
15.14 Torque Limit Function . . . 684
15.14.1 Max. Torque (6072h) . . . 684
15.14.2 Positive Torque Limit Value (60E0h) . . . 684
15.14.3 Negative Torque Limit Value (60E1h) . . . 684
15.15 Touch Probe Function . . . 685
15.15.1 Touch Probe Function (60B8h) . . . 685
15.15.2 Touch Probe Status (60B9h) . . . 686
15.15.3 Touch Probe 1 Positive Edge (60BAh) . . . 686
15.15.4 Touch Probe 1 Negative Edge (60BBh) . . . 687
15.15.5 Touch Probe 2 Positive Edge (60BCh) . . . 687
15.15.6 Touch Probe 2 Negative Edge (60BDh) . . . 687
15.16 Digital Inputs/Outputs . . . 688
15.16.1 Digital Inputs (60FDh) . . . 688
15.16.2 Digital Outputs (60FEh) . . . 688
15.17 Motor Catalogue Number (6403h) . . . 690
15.18 Manufacturer Serial Number (F9F0h) . . . 691

16. Maintenance . . . 693
16.1 Inspections and Part Replacement . . . 695
16.1.1 Inspections . . . 695
16.1.2 Guidelines for Part Replacement . . . 695
16.1.3 Replacing the Battery . . . 695
16.2 Alarm Displays . . . 698
16.2.1 List of Alarms . . . 698
16.2.2 Troubleshooting Alarms . . . 703
16.2.3 Alarm Reset . . . 730
16.2.4 Displaying the Alarm History . . . 731
16.2.5 Clearing the Alarm History . . . 732
16.2.6 Resetting Option Module Configuration Error . . . 733
16.2.7 Resetting Motor Type Alarms . . . 735
16.3 Warning Displays . . . 737
16.3.1 Warnings Table . . . 737
16.3.2 Troubleshooting Warnings . . . 738
16.4 Troubleshooting Based on the Operation and Conditions of the Servomotor . . . 744
16.4.1 Servomotor Does Not Start . . . 744
16.4.2 Servomotor Moves Instantaneously, and Then Stops . . . 745
16.4.3 Servomotor Speed Is Unstable . . . 745
16.4.4 Servomotor Moves without a Reference Input . . . 746
16.4.5 Dynamic Brake Does Not Operate . . . 746
16.4.6 Abnormal Noise from Servomotor . . . 746
16.4.7 Servomotor Vibrates at Frequency of Approx. 200 to 400 Hz . . . 748
16.4.8 Large Motor Speed on Starting and Stopping . . . 748
16.4.9 Absolute Encoder Position Deviation Error (The position that was saved in the host controller when the power was turned OFF is different from the position when the power was next turned ON.) . . . 749
16.4.10 Overtravel Occurred . . . 750
16.4.11 Improper Stop Position for Overtravel (OT) Signal . . . 750
16.4.12 Position Deviation (without Alarm) . . . 751
16.4.13 Servomotor Overheated . . . 752

17. Parameter and Object Lists . . . 753
17.1 Parameter Lists . . . 754
17.1.1 Interpreting the Parameter Lists . . . 754
17.1.2 List of Parameters . . . 755
17.2 Object List . . . 824
17.3 SDO Abort Code List . . . 843
17.4 Parameter Recording Table . . . 844

18. Appendices 857
18.1 Interpreting LED Displays 858
18.1.1 RUN 858
18.1.2 ERR 858
18.1.3 L/A A, L/A B 859
18.2 Interpreting Panel Displays 860
18.2.1 Interpreting Status Displays 860
18.2.2 Alarm and Warning Displays 860
18.2.3 Hard Wire Base Block Active Display 860
18.2.4 Overtravel Display 860
18.2.5 Forced Stop Display 861
18.3 Corresponding SERVOPACK and SigmaWin+ Function Names 862
18.3.1 Corresponding SERVOPACK Utility Function Names 862
18.3.2 Corresponding SERVOPACK Monitor Display Function Names 863

Index 868

Revision History 872

i

Preface and General Precautions

i.1 About this Manual 24

i.2 Target Readers 25

i.3 Outline of Manual 26

i.4 Related Documents 27

i.4.1 Related Documents 28

i.5 Using This Manual 32

i.5.1 Technical Terms Used in This Manual 32

i.5.2 Differences in Terms for Rotary Servomotors and Linear Servomotors 32

i.5.3 Notation Used in this Manual 33

i.5.4 Engineering Tools Used in This Manual 34

i.5.5 Trademarks 34

i.5.6 Visual Aids 34

i.6 Safety Precautions 36

i.6.1 Safety Information 36

i.6.2 Safety Precautions That Must Always Be Observed 36

i.7 Warranty 46

i.7.1 Details of Warranty 46

i.7.2 Limitations of Liability 46

i.7.3 Suitability for Use 46

i.7.4 Specifications Change 47

i.8 Compliance with UL Standards, EU Directives, and Other Safety Standards 48

i.8.1 North American Safety Standards (UL) 48

i.8.2 EU Directives 48

i.8.3 UK Conformity Assessed (UKCA) 49

i.8.4 Safety Standards 49

i.1 About this Manual

This manual provides information required to select Σ-XS SERVOPACKs with EtherCAT communications references for Σ-X-series AC servo drives, and to design, perform trial operation of, tune, operate, and maintain the servo drives.

Read and understand this manual to ensure correct usage of the Σ-X-series AC servo drives. Keep this manual in a safe place so that it can be referred to whenever necessary.

i.2 Target Readers

This manual is intended for the following readers who are assumed to possess knowledge about the fundamentals of servo drives and electric/electronic circuits.

- Readers who wish to deepen their knowledge of SERVOPACK products
- Personnel in charge of selecting products for equipment
- Designers of applications for SERVOPACKs and servomotors in various types of equipment
- Personnel who maintain equipment
- Designers of FA systems

i.3 Outline of Manual

The contents of the chapters of this manual are described in the following table. Refer to these chapters as required.

Chapter	Chapter Title	Contents
1	Basic Information on SERVOPACKs	Provides information required to select SERVOPACKs, such as SERVOPACK models and combinations with servomotors.
2	Selecting a SERVOPACK	Provides information required to select SERVOPACKs, such as specifications, block diagrams, dimensional drawings, and connection examples.
3	SERVOPACK Installation	Provides information on installing SERVOPACKs in the required locations.
4	Wiring and Connecting SERVOPACKs	Provides information on wiring and connecting SERVOPACKs to power supplies and peripheral devices.
5	Basic Functions That Require Setting before Operation	Describes the basic functions that must be set before you start servo system operation. It also describes the setting methods.
6	Application Functions	Describes the application functions that you can set before you start servo system operation. It also describes the setting methods.
7	Trial Operation and Actual Operation	Provides information on the flow and procedures for trial operation and convenient functions to use during trial operation.
8	Tuning	Provides information on the flow of tuning, details on tuning functions, and related operating procedures.
9	Monitoring	Provides information on monitoring SERVOPACK product information and SERVOPACK status.
10	Fully-Closed Loop Control	Provides detailed information on performing fully-closed loop control with the SERVOPACK.
11	Σ-LINK II Function	Provides detailed information on the Σ-LINK II functions of the SERVOPACK.
12	Safety Functions	Provides detailed information on the safety functions of the SERVOPACK.
13	EtherCAT Communications	Provides basic information on EtherCAT communications.
14	CiA402 Drive Profile	Provides detailed information on the CiA402 drive profile.
15	Object Dictionary	Provides an overview and details on the object dictionary.
16	Maintenance	Provides information on the meaning of, causes of, and corrections for alarms and warnings.
17	Parameter and Object Lists	Provides information on parameters and objects.
18	Appendices	Provides information on interpreting LED indicators and panel displays and tables of corresponding SERVOPACK and SigmaWin+ function names.

i.4 Related Documents

The relationships between the documents that are related to the Servo Drives are shown in the following figure. The numbers in the figure correspond to the numbers in the table on the following pages. Refer to these documents as required.

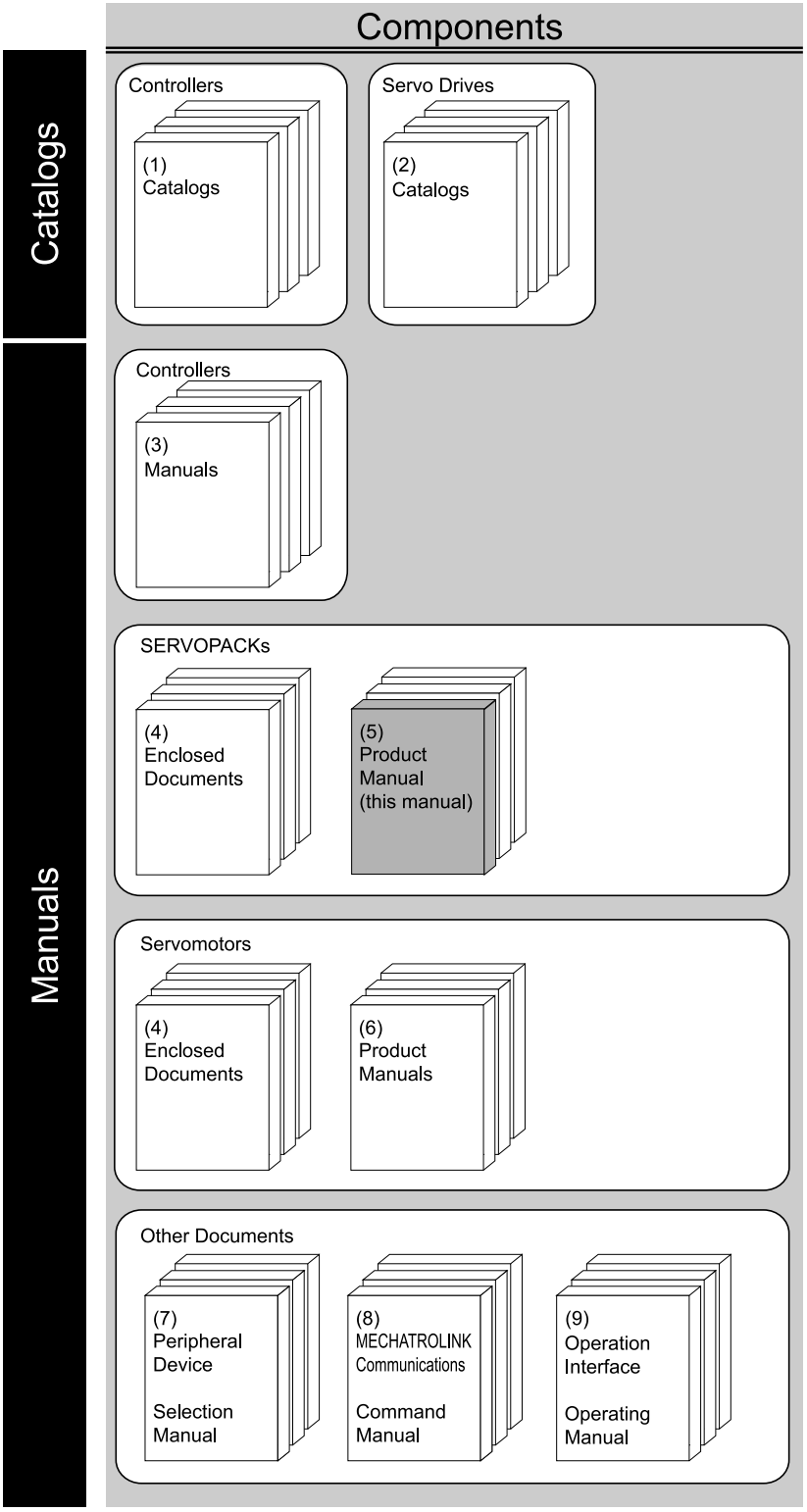

i.4.1 Related Documents

(1) Machine Controllers Catalogs

You can check for products related to YASKAWA machine controllers. Refer to these documents as required.

(2) Servo Drives Catalogs

Document Name	Document No.	Description
AC Servo Drives Sigma-X Series	KAEP C710812 03	Provides detailed information on Σ-X-series AC servo drives, including features and specifications.

(3) Machine Controllers Manuals

The machine controller to use depends on the SERVOPACK that is used. Refer to the manual for the machine controller as required.

(4) Included Documents

Document Name	Document No.	Description
Σ-X-Series AC Servo Drive Σ-XS/Σ-XW SERVOPACK Safety Precautions	TOMP C710812 00	Provide detailed information for the safe usage of Σ-X-series SERVOPACKs.
Σ-X-Series AC Servo Drive Σ-XT SERVOPACK Safety Precautions	TOMP C710812 16	
Σ-X-Series AC Servo Drive Advanced Safety Module Safety Precautions	TOMP C710812 25	Provides detailed information for the safe usage of the advanced safety module.
Σ-X-Series AC Servo Drive Advanced Safety Module Installation Guide	TOMP C710812 26	Provides detailed procedures for installing the advanced safety module in a SERVOPACK.
Σ-X-Series AC Servo Drive Σ-LINK II Sensor Hub Instructions	TOMP C710812 06	Provides detailed information for the safe usage of the Σ-LINK II sensor hub, as well as specifications, installation, and connection information.
Σ-X-Series AC Servo Drive Σ-LINK II Booster Unit Instructions	TOMP C710812 08	Provides detailed information for the safe usage of the Σ-LINK II booster unit, as well as specifications, installation, and connection information.
Σ-V-Series/Σ-V-Series for Large-Capacity Models/Σ-7-Series/Σ-X-Series Installation Guide Fully-closed Module	TOBP C720829 03	Provides detailed procedures for installing the fully-closed module in a SERVOPACK.
AC Servo Drive Rotary Servomotor Safety Precautions	TOBP C230260 00	Provides detailed information for the safe usage of rotary servomotors and direct drive servomotors.

(5) SERVOPACK Product Manuals

Document Name	Document No.	Description
Σ-X-Series AC Servo Drive Σ-XS SERVOPACK with MECHATROLINK-4/III Communications References Product Manual	SIEP C710812 01	Provide detailed information on selecting Σ-X-series Σ-XS or Σ-XW SERVOPACKs; installing, connecting, setting, testing in trial operation, tuning, monitoring, and maintaining servo drives; and other information.
Σ-X-Series AC Servo Drive Σ-XS SERVOPACK with EtherCAT Communications References Product Manual	SIEP C710812 02	
Σ-X-Series AC Servo Drive Σ-XS SERVOPACK with Analog Voltage/Pulse Train References Product Manual	SIEP C710812 03	
Σ-X-Series AC Servo Drive Σ-XW SERVOPACK with MECHATROLINK-4/III Communications References Product Manual	SIEP C710812 04	
Σ-X-Series AC Servo Drive Σ-XW SERVOPACK with EtherCAT Communications References Product Manual	SIEP C710812 05	
Σ-X-Series AC Servo Drive Σ-XT SERVOPACK with MECHATROLINK-4/III Communications References Product Manual	SIEP C710812 16	Provide detailed information on selecting Σ-X-series Σ-XT SERVOPACKs; installing, connecting, setting, testing in trial operation, tuning, monitoring, and maintaining servo drives; and other information.
Σ-X-Series AC Servo Drive Σ-XT SERVOPACK with EtherCAT Communications References Product Manual	SIEP C710812 17	
Σ-X-Series AC Servo Drive Advanced Safety Module with Safety over EtherCAT (FSoE) Communications References Product Manual	SIEP C710812 25	Provide detailed information on selecting the advanced safety module; installing, connecting, setting, testing in trial operation, tuning, monitoring, and maintaining servo drives; and other information.
Σ-X-Series AC Servo Drive Advanced Safety Module Digital I/O Product Manual	SIEP C710812 26	
Σ-X-Series AC Servo Drive Σ-XW/Σ-XT SERVOPACK Hardware Option Specifications HWBB Function Product Manual	SIEP C710812 13	Provides information on servo drives equipped with the HWBB safety function (SGDXW-□□□□40□1000, SGDXW-□□□□A0□1000, SGDXT-□□□□40□1000, and SGDXT-□□□□A0□1000)). The differences in specifications from SERVOPACKs not equipped with the HWBB are given in this manual.
Σ-X-Series AC Servo Drive Σ-XS/Σ-XW/Σ-XT SERVOPACK Hardware Option Specifications Dynamic Brake Product Manual	SIEP C710812 14	Provides information on Σ-X-series AC servo drives (SGDX□-□□□□□□□0020) with the dynamic brake option. The differences in specifications from SERVOPACKs without the dynamic brake option are given in this manual.

Continued on next page.

Continued from previous page.

Document Name	Document No.	Description
Σ-X-Series AC Servo Drive Σ-XS/Σ-XW SERVOPACK with MECHATROLINK-4/III Communications References FT Specification for Gantry Applications Product Manual	SIEP C710812 19	Provide information on the gantry application function and torque/force assistance in the Σ-X-series Σ-XS/Σ-XW SERVOPACK.
Σ-X-Series AC Servo Drive Σ-XS/Σ-XW SERVOPACK with EtherCAT Communications References FT Specification for Gantry Applications Product Manual	SIEP C710812 20	
Σ-X-Series AC Servo Drive Σ-XS SERVOPACK with MECHATROLINK-4/III Communications References FT Specification for Press and Injection Molding Applications Product Manual	SIEP C710812 22	Provide information on the press and injection molding function in the Σ-X-series Σ-XS SERVOPACK.
Σ-X-Series AC Servo Drive Σ-XS SERVOPACK with EtherCAT Communications References FT Specification for Press and Injection Molding Applications Product Manual	SIEP C710812 23	
Σ-X-Series AC Servo Drive Σ-XS SERVOPACK with FT Specification Customized Sensing Data Function Option Product Manual	SIEP C710812 18	Provides information on the customized sensing data function in the Σ-X-series Σ-XS SERVOPACK.
Σ-X-Series AC Servo Drive Σ-XS SERVOPACK with FT Specification Customized Sensing Data Function Option (with Custom Motion Function) Product Manual	SIEP C710812 21	Provides information on the customized sensing data function (with custom motion function) in the Σ-X-series Σ-XS SERVOPACK.

(6) Servomotor Product Manuals

Document Name	Document No.	Description
Σ-X-Series AC Servo Drive Rotary Servomotor Product Manual	SIEP C230210 00	Provides detailed information on selecting, installing, and connecting the Σ-X-series servomotors.

(7) Peripheral Device Selection Manual

Document Name	Document No.	Description
Σ-X-Series AC Servo Drive Peripheral Device Selection Manual	SIEP C710812 12	Provides the following information in detail for Σ-X-series servo systems. • Cables: Models, dimensions, wiring materials, connector models, and connection specifications • Peripheral devices: Models, specifications, diagrams, and selection (calculation) methods

(8) MECHATROLINK Communications Command Manuals

Document Name	Document No.	Description
Σ-7/Σ-X-Series AC Servo Drive MECHATROLINK-III Communications Standard Servo Profile Command Manual	SIEP S800001 31	Provides detailed information on the MECHATROLINK-III communications standard servo profile commands that are used for a Σ-7/Σ-X-series servo system.
Σ-7/Σ-X-Series AC Servo Drive MECHATROLINK-4 Communications Standard Servo Profile Command Manual	SIEP S800002 32	Provides detailed information on the MECHATROLINK-4 communications standard servo profile commands that are used for a Σ-7/Σ-X-series servo system.

(9) Operation Interface Operating Manuals

Document Name	Document No.	Description
System Integrated Engineering Tool MPE720 Ver.7 User's Manual	SIEP C880761 03	Describes in detail how to operate MPE720 version 7.
Σ-7/Σ-X-Series AC Servo Drive Digital Operator Operating Manual	SIEP S800001 33	Describes the operating procedures for a digital operator for a Σ-7/Σ-X-series servo system.
AC Servo Drive Engineering Tool SigmaWin+ Operation Manual	SIET S800001 34	Provides detailed operating procedures for the SigmaWin + engineering tool for a Σ-7/Σ-X series servo system.

i.5 Using This Manual

i.5.1 Technical Terms Used in This Manual

The following terms are used in this manual.

Term	Meaning
servomotor	A generic term for a rotary servomotor or linear servomotor that can be driven by this SERVOPACK.
rotary servomotor	A generic term used for a Σ-X-series or Σ-7-series rotary servomotor (SGMXJ, SGMXA, SGMXP, SGMXG, SGM7M) or a Σ-7-series direct drive servomotor (SGM7D, SGM7E, SGM7F). The descriptions will specify when direct drive servomotors are excluded.
linear servomotor	A generic term used for a Σ-7-series linear servomotor (SGLG, SGLF, SGLT).
SERVOPACK	A Σ-X-series Σ-XS servo amplifier with EtherCAT communications references.
servo drive	The combination of a servomotor and SERVOPACK.
servo system	A servo control system that includes the combination of a servo drive with a host controller and peripheral devices.
servo ON	Supplying power to the motor.
servo OFF	Not supplying power to the motor.
Servo ON command (Enable Operation command)	A command that is used to turn ON the servo (i.e., supply power to the motor) when bit 3 of Controlword (6040h) is changed to 1 (ON) while the control power and main circuit power are ON.
Servo OFF command (Disable Operation command)	A command that is used to turn OFF the servo (i.e., power not supplied to the motor) when bit 3 of Controlword (6040h) is changed to 0 (OFF) while the control power and main circuit power are ON.
base block (BB)	Shutting OFF the power supply to the motor by shutting OFF the base current to the power transistor in the SERVOPACK.
servo lock	A state in which the motor is stopped and is in a position loop with a position reference of 0.
main circuit cable	One of the cables that connect to the main circuit terminals, including the main circuit power supply cable, control power supply cable, and servomotor main circuit cable.
SigmaWin+	The engineering tool for setting up and tuning servo drives or a computer in which the engineering tool is installed.

i.5.2 Differences in Terms for Rotary Servomotors and Linear Servomotors

There are differences in the terms that are used for rotary servomotors and linear servomotors. This manual primarily describes rotary servomotors. If you are using a linear servomotor, you need to interpret the terms as given in the following table.

Rotary Servomotor	Linear Servomotor
torque	force
moment of inertia	mass
rotation	movement
forward rotation and reverse rotation	forward movement and reverse movement
CW + CCW pulse trains	forward and reverse pulse trains
rotary encoder	linear encoder
absolute rotary encoder	absolute linear encoder
incremental rotary encoder	incremental linear encoder

Continued on next page.

Continued from previous page.

Rotary Servomotor	Linear Servomotor
unit: min^{-1}	unit: mm/s
unit: N·m	unit: N

i.5.3 Notation Used in this Manual

(1) Notation for Reverse Signals

The names of reverse signals (i.e., ones that are valid when low) are written with a forward slash (/) before the signal abbreviation.

Notation Example

$\overline{BK}$ is written as /BK.

(2) Notation for Parameters

The notation depends on whether the parameter requires a numeric setting (parameter for numeric setting) or requires the selection of a function (parameter for selecting functions).

(a) Parameters for Numeric Settings

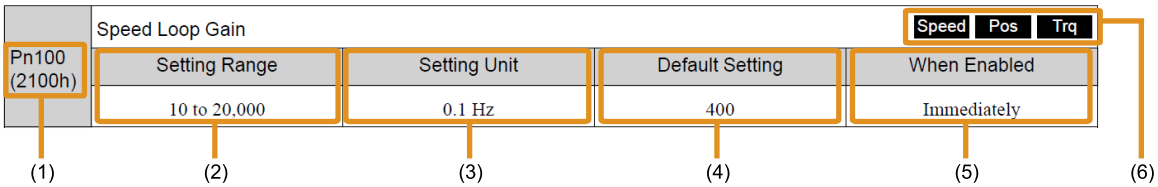

No.	Description
(1)	Parameter number and object index number The object index number is used when accessing an object over EtherCAT communications.
(2)	This is the setting range for the parameter.
(3)	This is the setting unit (setting increment) that you can set for the parameter.
(4)	This is the parameter setting before shipment.
(5)	This is when any change made to the parameter will become effective.
(6)	The control methods for which the parameters apply are given. Speed: A parameter that can be used in speed control. Pos: A parameter that can be used in position control. Trq: A parameter that can be used in torque control. "Torque" is used even for linear servomotor parameters. Grayed-out icons (Speed, Pos, Trq) indicate parameters that cannot be used in the corresponding control method.

(b) Parameters for Selecting Functions

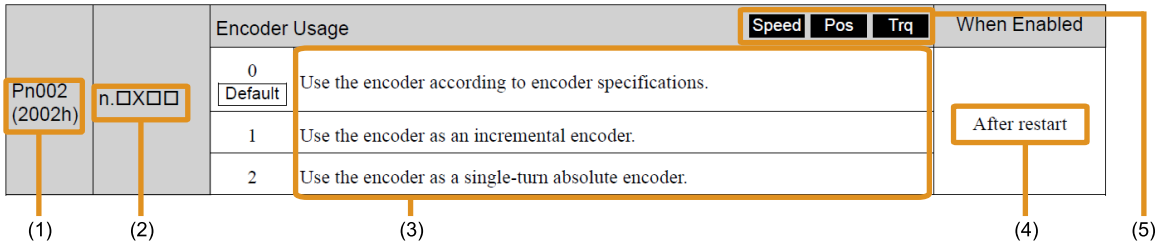

<table>
<tr><th>No.</th><th>Description</th></tr>
<tr><td>(1)</td><td>Parameter number and object index number
The object index number is used when accessing an object over EtherCAT communications.</td></tr>
<tr><td>(2)</td><td>The notation “n.□□□□” indicates a parameter for selecting functions. The digit shown as "X" is the content being explained in this parameter.
Notation Example
n. 0 0 0 0
Notation Examples for Pn002
<table>
<tr><th colspan="2">Digit Notation</th><th colspan="2">Numeric Value Notation</th></tr>
<tr><th>Notation</th><th>Meaning</th><th>Notation</th><th>Meaning</th></tr>
<tr><td>Pn002 = n.□□□X</td><td>Indicates the first digit from the right in Pn002.</td><td>Pn002 = n.□□□1</td><td>Indicates that the first digit from the right in Pn002 is set to 1.</td></tr>
<tr><td>Pn002 = n.□□X□</td><td>Indicates the second digit from the right in Pn002.</td><td>Pn002 = n.□□1□</td><td>Indicates that the second digit from the right in Pn002 is set to 1.</td></tr>
<tr><td>Pn002 = n.□X□□</td><td>Indicates the third digit from the right in Pn002.</td><td>Pn002 = n.□1□□</td><td>Indicates that the third digit from the right in Pn002 is set to 1.</td></tr>
<tr><td>Pn002 = n.X□□□</td><td>Indicates the fourth digit from the right in Pn002.</td><td>Pn002 = n.1□□□</td><td>Indicates that the fourth digit from the right in Pn002 is set to 1.</td></tr>
</table></td></tr>
<tr><td>(3)</td><td>This column explains the selections for the function.
In the above example, the first line gives an explanation of when Pn002 = n.□0□□ is set.</td></tr>
<tr><td>(4)</td><td>This is when any change made to the parameter will become effective.</td></tr>
<tr><td>(5)</td><td>The control methods for which the parameters apply are given.
Speed: A parameter that can be used in speed control.
Pos: A parameter that can be used in position control.
Trq: A parameter that can be used in torque control. "Torque" is used even for linear servomotor parameters.
Grayed-out icons (Speed, Pos, Trq) indicate parameters that cannot be used in the corresponding control method.</td></tr>
</table>

i.5.4 Engineering Tools Used in This Manual

This manual uses the interfaces of the SigmaWin+ for descriptions.

The interfaces and procedures contained in this manual are currently in development and may differ from the actual specifications.

i.5.5 Trademarks

- EtherCAT® and Safety over EtherCAT® are registered trademarks and patented technologies, licensed by Beckhoff Automation GmbH, Germany.
- Σ-LINK is a trademark of the MECHATROLINK Members Association.
- QR code is a trademark of Denso Wave Inc.
- Other product names and company names are the trademarks or registered trademarks of their respective companies. “TM” and the ® mark do not appear with product or company names in this manual.

i.5.6 Visual Aids

The following aids are used to indicate certain types of information for easier reference.

Important

Indicates precautions or restrictions that must be observed.

Also indicates alarm displays and other precautions that will not result in machine damage.

Term

Indicates definitions of difficult terms or terms that have not been previously explained in this manual.

Information

Indicates supplemental information to deepen understanding or useful information.

i.6 Safety Precautions

i.6.1 Safety Information

To prevent personal injury and equipment damage in advance, the following signal words are used to indicate safety precautions in this document. The signal words are used to classify the hazards and the degree of damage or injury that may occur if a product is used incorrectly. Information marked as shown below is important for safety. Always read this information and heed the precautions that are provided.

⚠ DANGER

Indicates precautions that, if not heeded, are likely to result in loss of life, serious injury, or fire.

⚠ WARNING

Indicates precautions that, if not heeded, could result in loss of life, serious injury, or fire.

⚠ CAUTION

Indicates precautions that, if not heeded, could result in relatively serious or minor injury, or in fire.

NOTICE

Indicates precautions that, if not heeded, could result in property damage.

i.6.2 Safety Precautions That Must Always Be Observed

(1) General Precautions

⚠ DANGER

Read and understand this manual to ensure the safe usage of the product.

Keep this manual in a safe, convenient place so that it can be referred to whenever necessary. Make sure that it is delivered to the final user of the product.

Do not remove covers, cables, connectors, or optional devices while power is being supplied to the SERVOPACK.

There is a risk of electric shock, operational failure of the product, or burning.

⚠ WARNING

Use a power supply with specifications (number of phases, voltage, frequency, and AC/DC type) that are appropriate for the product.

There is a risk of burning, electric shock, or fire.

⚠ WARNING

Connect the ground terminals on the SERVOPACK and servomotor to ground poles according to local electrical codes (100 Ω max. for a SERVOPACK with a 200-VAC power supply, and 10 Ω max. for a SERVOPACK with a 400-VAC power supply). In addition, a SERVOPACK with 400-VAC power supply input can be used only in a power system with neutral grounded. Make sure to connect the SERVOPACK to a power supply with neutral grounded.

There is a risk of electric shock or fire.

⚠ WARNING

Do not attempt to disassemble, repair, or modify the product.

There is a risk of fire or failure. The warranty is void for the product if you disassemble, repair, or modify it.

⚠ CAUTION

The SERVOPACK heat sinks, regenerative resistors, external dynamic brake resistors, servomotors, and other components can be very hot while power is ON or soon after the power is turned OFF. Implement safety measures, such as installing covers, so that hands and parts such as cables do not come into contact with hot components.

There is a risk of burning.

For a 24-VDC power supply, use a power supply device with double insulation or reinforced insulation.

There is a risk of electric shock.

Do not damage, pull on, apply excessive force to, place heavy objects on, or pinch cables.

There is a risk of failure, damage, or electric shock.

The person who designs the system that uses the safety function must have a complete knowledge of the related safety standards and a complete understanding of the instructions in this document.

There is a risk of injury, product damage, or machine damage.

Do not place the product in locations where it is subject to water, corrosive gases, flammable gases, potentially explosive atmospheres, or near flammable materials.

There is a risk of electric shock or fire.

NOTICE

Do not attempt to use a SERVOPACK or servomotor that is damaged or that has missing parts.

Install external emergency stop circuits that shut OFF the power and stops operation immediately when an error occurs.

In locations with poor power supply conditions, install the necessary protective devices (such as AC reactors) to ensure that the input power is supplied within the specified voltage range.

There is a risk of damage to the SERVOPACK.

Use a noise filter to minimize the effects of electromagnetic interference.

Electronic devices used near the SERVOPACK may be affected by electromagnetic interference.

Always use a servomotor and SERVOPACK in one of the specified combinations.

Do not touch a SERVOPACK or servomotor with wet hands.

There is a risk of product failure.

(2) Storage Precautions

⚠ CAUTION

Do not place an excessive load on the product. (Follow all instructions on the packages.)

There is a risk of injury or damage.

NOTICE

Do not install or store the product in any of the following locations.

- **Locations that are subject to direct sunlight**
- **Locations that are subject to surrounding temperatures that exceed product specifications**
- **Locations that are subject to relative humidities that exceed product specifications**
- **Locations that are subject to condensation as the result of extreme changes in temperature**
- **Locations that are subject to corrosive or flammable gases**
- **Locations that are near flammable materials**
- **Locations that are subject to dust, salts, or iron powder**
- **Locations that are subject to water, oil, or chemicals**
- **Locations that are subject to vibration or shock that exceeds product specifications**
- **Locations that are subject to radiation**

If you store or install the product in any of the above locations, the product may fail or be damaged.

(3) Transportation Precautions

⚠ CAUTION

Transport the product in a way that is suitable to the mass of the product.

Do not use the eyebolts on a SERVOPACK or servomotor to move the machine.

There is a risk of damage or injury.

When you handle a SERVOPACK or servomotor, be careful of sharp parts, such as the corners.

There is a risk of injury.

Do not place an excessive load on the product. (Follow all instructions on the packages.)

There is a risk of injury or damage.

NOTICE

Do not hold onto the front cover or connectors when you move a SERVOPACK.

There is a risk of the SERVOPACK falling.

SERVOPACK or servomotor is a precision device. Do not drop it or subject it to strong shock.

There is a risk of failure or damage.

Do not subject connectors to shock.

There is a risk of faulty connections or damage.

NOTICE

If disinfectants or insecticides must be used to treat packing materials such as wooden frames, plywood, or pallets, use a method other than fumigation. For example, use heat sterilization (core temperature of 56°C or higher for 30 minutes or longer). Treat the packing materials before the product is packaged instead of using a method that treats the entire packaged product.

If the electronic products, which include stand-alone products and products installed in machines, are packed with fumigated wooden materials, the electrical components may be greatly damaged by the gases or fumes resulting from the fumigation process. In particular, disinfectants containing halogen, which includes chlorine, fluorine, bromine, or iodine can contribute to the erosion of the capacitors.

Do not overtighten the eyebolts on a SERVOPACK or servomotor.

If you use a tool to overtighten the eyebolts, the tapped holes may be damaged.

(4) Installation Precautions

⚠ CAUTION

Install the servomotor or SERVOPACK in a way that will support the mass given in technical documents.

Install SERVOPACKs, servomotors, regenerative resistors, and external dynamic brake resistors on nonflammable materials.

Installation directly onto or near flammable materials may result in fire.

Provide the specified clearances between the SERVOPACK and the control panel as well as with other devices.

There is a risk of fire or failure.

Install the SERVOPACK in the specified orientation.

There is a risk of fire or failure.

Do not step on or place a heavy object on the product.

There is a risk of failure, damage, or injury.

Do not allow any foreign matter to enter the SERVOPACK or servomotor.

There is a risk of failure or fire.

NOTICE

Do not install or store the product in any of the following locations.

- **Locations that are subject to direct sunlight**
- **Locations that are subject to surrounding temperatures that exceed product specifications**
- **Locations that are subject to relative humidities that exceed product specifications**
- **Locations that are subject to condensation as the result of extreme changes in temperature**
- **Locations that are subject to corrosive or flammable gases**
- **Locations that are near flammable materials**
- **Locations that are subject to dust, salts, or iron powder**
- **Locations that are subject to water, oil, or chemicals**
- **Locations that are subject to vibration or shock that exceeds product specifications**
- **Locations that are subject to radiation**

If you store or install the product in any of the above locations, the product may fail or be damaged.

Use the product in an environment that is appropriate for the product specifications.

If you use the product in an environment that exceeds product specifications, the product may fail or be damaged.

NOTICE

SERVOPACK or servomotor is a precision device. Do not drop it or subject it to strong shock.

There is a risk of failure or damage.

Always install a SERVOPACK in a control panel.

Do not allow any foreign matter to enter a SERVOPACK or a servomotor with a cooling fan and do not cover the outlet from the servomotor's cooling fan.

There is a risk of failure.

(5) Wiring Precautions

DANGER

Do not change any wiring while power is being supplied.

There is a risk of electric shock or injury.

WARNING

Wiring and inspections must be performed only by qualified engineers.

There is a risk of electric shock or product failure.

Check all wiring and power supplies carefully.

Incorrect wiring or incorrect voltage application to the output circuits may cause short-circuit failures. If a short-circuit failure occurs as a result of any of these causes, the holding brake will not work. This could damage the machine or cause an accident that may result in death or injury. There is also a risk that some parts damaged by the short-circuit failure may fall from the SERVOPACK.

WARNING

Always use the specified terminals to connect the SERVOPACK and peripheral devices. For the power supply wiring in particular, confirm that the connections are made with the terminals shown below.

SERVOPACKs with a 200-VAC Power Supply Input

- **Connect an AC power supply to the L1, L2, and L3 terminals and the L1C and L2C terminals on the SERVOPACK.**
- **Connect a DC power supply to the B1/⊕ and ⊖2 terminals and the L1C and L2C terminals on the SERVOPACK.**

SERVOPACKs with a 400-VAC Power Supply Input

- **Connect an AC power supply to the L1, L2, and L3 terminals on the SERVOPACK.**
- **Connect a DC power supply to the B1/⊕ and ⊖2 terminals on the SERVOPACK.**
- **Regardless of whether the main circuit power supply wiring is AC or DC, connect the 24-VDC input for the control power supply to the 24-V and 0-V terminals.**

There is a risk of failure or fire.

WARNING

If you use a SERVOPACK with the dynamic brake hardware option, connect an external dynamic brake resistor that is suitable for the machine and equipment specifications to the specified terminals.

There is a risk of unexpected operation, machine damage, burning, or injury when an emergency stop is performed.

⚠ CAUTION

Wait for at least 20 minutes (or 100 minutes when using DC power supply input) after turning OFF the power and then make sure that the CHARGE indicator is not lit before starting wiring or inspection work. Do not touch the main circuit terminals while the CHARGE indicator is lit because high voltage may still remain in the SERVOPACK even after turning OFF the power.

There is a risk of electric shock.

Observe the precautions and instructions for wiring and trial operation precisely as described in this document.

Failures caused by incorrect wiring or incorrect voltage application in the brake circuit may cause the SERVOPACK to fail, damage the equipment, or cause an accident resulting in death or injury.

Check the wiring to be sure it has been performed correctly. Connectors and pin layouts are sometimes different for different models. Always confirm the pin layouts in technical documents for your model before operation.

There is a risk of failure or malfunction.

Connect wires to main circuit terminals and motor connection terminals securely with the specified methods and tightening torque.

Insufficient tightening may cause wires and terminal blocks to generate heat due to faulty contact, possibly resulting in fire.

Use shielded twisted-pair cables or screened unshielded multi-twisted-pair cables for I/O signal cables and encoder cables.

⚠ CAUTION

The maximum wiring length is 3 m for I/O signal cables and 50 m for servomotor main circuit cables and encoder cables. The maximum wiring length is 10 m for the control power supply cables (+24 V and 0 V) for SERVOPACKs with a 400-V power supply input.

⚠ CAUTION

Observe the following precautions when wiring the SERVOPACK's main circuit terminals.

- **Turn ON the power to the SERVOPACK only after all wiring, including the main circuit terminals, has been completed.**
- **If a connector is used for the main circuit terminals, remove the main circuit connector from the SERVOPACK before you wire it.**
- **Insert only one wire per insertion hole in the main circuit terminals.**
- **When you insert a wire, make sure that the conductor wire (e.g., whiskers) does not come into contact with adjacent wires and cause a short-circuit.**

Install molded-case circuit breakers and other safety measures to provide protection against short circuits in external wiring.

There is a risk of fire or failure.

NOTICE

Whenever possible, use the cables specified by Yaskawa. If you use any other cables, confirm the rated current and application environment of your model and use the wiring materials specified by Yaskawa or equivalent materials.

Securely tighten connector screws and lock mechanisms.

Insufficient tightening may result in connectors falling off during operation.

NOTICE

Do not bundle power lines (e.g., the main circuit cable) and low-current lines (e.g., the I/O signal cables or encoder cables) together or run them through the same duct. If you do not place power lines and low-current lines in separate ducts, separate them by at least 30 cm.

If the cables are too close to each other, malfunctions may occur due to noise affecting the low-current lines.

Install a battery at either the host controller or on the encoder cable.

If you install batteries both at the host controller and on the encoder cable at the same time, you will create a loop circuit between the batteries, resulting in a risk of damage or burning.

When connecting a battery, connect the polarity correctly.

There is a risk of battery rupture or encoder failure.

(6) Operation Precautions

⚠ WARNING

Before starting operation with a machine connected, change the settings of the switches and parameters to match the machine.

Unexpected machine operation, failure, or personal injury may occur if operation is started before appropriate settings are made.

Do not radically change the settings of the parameters.

There is a risk of unstable operation, machine damage, or injury.

Install limit switches or stoppers at the ends of the moving parts of the machine to prevent unexpected accidents.

There is a risk of machine damage or injury.

For trial operation, securely mount the servomotor and disconnect it from the machine.

There is a risk of injury.

Forcing the motor to stop for overtravel is disabled when the Jog, Origin Search, or Easy FFT utility function is executed. Take necessary precautions.

There is a risk of machine damage or injury.

When an alarm occurs, the servomotor will coast to a stop or stop with the dynamic brake according to the SERVOPACK option and settings. The coasting distance will change with the moment of inertia of the load and the external dynamic brake resistance. Check the coasting distance during trial operation and implement suitable safety measures on the machine.

Do not enter the machine's range of motion during operation.

There is a risk of injury.

Do not touch the moving parts of the servomotor or machine during operation.

There is a risk of injury.

Perform the correct operation with the servomotor connected to the machine.

There is a risk of machine damage or personal injury.

⚠ CAUTION

Design the system to ensure safety even when problems, such as broken signal lines, occur. For example, the P-OT and N-OT signals are set in the default settings to operate on the safe side if a signal line breaks. Do not change the polarity of this type of signal.

When overtravel occurs, the power to the motor is turned OFF and the brake is released. If you use the servomotor to drive a vertical load, set the servomotor to enter a zero-clamped state after the servomotor stops. Also, install safety devices (such as an external brake or counterweight) to prevent the moving parts of the machine from falling.

Always turn OFF the servo before you turn OFF the power. If you turn OFF the main circuit power or control power during operation before you turn OFF the servo, the servomotor will stop as follows:

- **If you turn OFF the main circuit power during operation without turning OFF the servo, the servomotor will stop abruptly with the dynamic brake.**
- **If you turn OFF the control power without turning OFF the servo, the stopping method that is used by the servomotor depends on the model of the SERVOPACK. For details, refer to the manual for the SERVOPACK.**
- **If you use a SERVOPACK with the dynamic brake hardware option, the servomotor stopping methods will be different from the stopping methods used without the option or with other hardware options.**

Do not use the dynamic brake for any application other than an emergency stop.

There is a risk of failure due to rapid deterioration of elements in the SERVOPACK and the risk of unexpected operation, machine damage, burning, or injury.

NOTICE

When you adjust the gain during system commissioning, use a measuring instrument to monitor the torque waveform and speed waveform and confirm that there is no vibration.

If a high gain causes vibration, the servomotor will be damaged quickly.

Do not frequently turn the power ON and OFF. After you have started actual operation, allow at least one hour between turning the power ON and OFF (as a guideline). Do not use the product in applications that require the power to be turned ON and OFF frequently.

The elements in the SERVOPACK will deteriorate quickly.

An alarm or warning may occur if communications are performed with the host controller while the SigmaWin+ or digital operator is operating.

If an alarm or warning occurs, it may interrupt the current process and stop the system.

After you complete trial operation of the machine and facilities, use the SigmaWin+ to back up the settings of the SERVOPACK parameters. You can use them to reset the parameters after SERVOPACK replacement.

If you do not copy backed up parameter settings, normal operation may not be possible after a faulty SERVOPACK is replaced, possibly resulting in machine or equipment damage.

(7) Maintenance and Inspection Precautions

⚠ DANGER

Do not change any wiring while power is being supplied.

There is a risk of electric shock or injury.

⚠ WARNING

Wiring and inspections must be performed only by qualified engineers.

There is a risk of electric shock or product failure.

⚠ CAUTION

Wait for at least 20 minutes (or 100 minutes when using DC power supply input) after turning OFF the power and then make sure that the CHARGE indicator is not lit before starting wiring or inspection work. Do not touch the main circuit terminals while the CHARGE indicator is lit because high voltage may still remain in the SERVOPACK even after turning OFF the power.

There is a risk of electric shock.

Before you replace a SERVOPACK, back up the settings of the SERVOPACK parameters. Copy the backed up parameter settings to the new SERVOPACK and confirm that they were copied correctly.

If you do not copy backed up parameter settings or if the copy operation is not completed correctly, normal operation may not be possible, possibly resulting in machine or equipment damage.

NOTICE

Discharge all static electricity from your body before you operate any of the buttons or switches inside the front cover of the SERVOPACK.

There is a risk of equipment damage.

(8) Troubleshooting Precautions

⚠ DANGER

If the safety device (molded-case circuit breaker or fuse) installed in the power supply line operates, remove the cause before you supply power to the SERVOPACK again. If necessary, repair or replace the SERVOPACK, check the wiring, and remove the factor that caused the safety device to operate.

There is a risk of fire, electric shock, or injury.

⚠ WARNING

The product may suddenly start to operate when the power supply is recovered after a momentary power interruption. Design the machine to ensure human safety when operation restarts.

There is a risk of injury.

⚠ CAUTION

When an alarm occurs, remove the cause of the alarm and ensure safety. Then reset the alarm or turn the power OFF and ON again to restart operation.

There is a risk of injury or machine damage.

If the Servo ON signal is input to the SERVOPACK and an alarm is reset, the servomotor may suddenly restart operation. Confirm that the servo is OFF and ensure safety before you reset an alarm.

There is a risk of injury or machine damage.

⚠ CAUTION

Always insert a magnetic contactor in the line between the main circuit power supply and the main circuit terminals on the SERVOPACK so that the power can be shut OFF at the main circuit power supply.

If a magnetic contactor is not connected when the SERVOPACK fails, a large current may flow continuously, possibly resulting in fire.

If an alarm occurs, shut OFF the main circuit power supply.

There is a risk of fire due to a regenerative resistor overheating as the result of regenerative transistor failure.

Install a ground fault detector against overloads and short-circuiting or install a molded-case circuit breaker combined with a ground fault detector.

There is a risk of SERVOPACK failure or fire if a ground fault occurs.

The holding brake on a servomotor will not ensure safety if there is the possibility that an external force (including gravity) may move the current position and create a hazardous situation when power is interrupted or an error occurs. If an external force may cause movement, install an external braking mechanism that ensures safety.

(9) Disposal Precautions

- Correctly discard the product as stipulated by regional, local, and municipal laws and regulations. Be sure to include these contents in all labelling and warning notifications on the final product as necessary.

(10) General Precautions

- Figures provided in this manual are typical examples or conceptual representations. There may be differences between them and actual wiring, circuits, and products.
- The products shown in illustrations in this manual are sometimes shown with their covers or protective guards removed to illustrate detail. Always replace all covers and protective guards before you use the product.
- If you need a new copy of this manual because it has been lost or damaged, contact your nearest Yaskawa representative or one of the offices listed on the back of this manual.
- This manual is subject to change without notice for product improvements, specifications changes, and improvements to the manual itself. We will update the manual number of the manual and issue revisions when changes are made.
- Any and all quality guarantees provided by Yaskawa are null and void if the customer modifies the product in any way. Yaskawa disavows any responsibility for damages or losses that are caused by modified products.

i.7 Warranty

i.7.1 Details of Warranty

(1) Warranty Period

The warranty period for a product that was purchased (hereinafter called the “delivered product”) is one year from the time of delivery to the location specified by the customer or 18 months from the time of shipment from the Yaskawa factory, whichever is sooner.

(2) Warranty Scope

Yaskawa shall replace or repair a defective product free of charge if a defect attributable to Yaskawa occurs during the above warranty period. This warranty does not cover defects caused by the delivered product reaching the end of its service life and replacement of parts that require replacement or that have a limited service life.

This warranty does not cover failures that result from any of the following causes.

- Improper handling, abuse, or use in unsuitable conditions or in environments not described in product catalogs or manuals, or in any separately agreed-upon specifications
- Causes not attributable to the delivered product itself
- Modifications or repairs not performed by Yaskawa
- Use of the delivered product in a manner in which it was not originally intended
- Causes that were not foreseeable with the scientific and technological understanding at the time of shipment from Yaskawa
- Events for which Yaskawa is not responsible, such as natural or human-made disasters

i.7.2 Limitations of Liability

- Yaskawa shall in no event be responsible for any damage or loss of opportunity to the customer that arises due to failure of the delivered product.
- Yaskawa shall not be responsible for any programs (including parameter settings) or the results of program execution of the programs provided by the user or by a third party for use with programmable Yaskawa products.
- The information described in product catalogs or manuals is provided for the purpose of the customer purchasing the appropriate product for the intended application. The use thereof does not guarantee that there are no infringements of intellectual property rights or other proprietary rights of Yaskawa or third parties, nor does it construe a license.
- Yaskawa shall not be responsible for any damage arising from infringements of intellectual property rights or other proprietary rights of third parties as a result of using the information described in catalogs or manuals.

i.7.3 Suitability for Use

- It is the customer’s responsibility to confirm conformity with any standards, codes, or regulations that apply if the Yaskawa product is used in combination with any other products.
- The customer must confirm that the Yaskawa product is suitable for the systems, machines, and equipment used by the customer.
- Consult with Yaskawa to determine whether use in the following applications is acceptable. If use in the application is acceptable, use the product with extra allowance in ratings and specifications, and provide safety measures to minimize hazards in the event of failure.
  - Outdoor use, use involving potential chemical contamination or electrical interference, or use in conditions or environments not described in product catalogs or manuals

  - Nuclear energy control systems, combustion systems, railroad systems, aviation systems, vehicle systems, medical equipment, amusement machines, and installations subject to separate industry or government regulations
  - Systems, machines, and equipment that may present a risk to life or property
  - Systems that require a high degree of reliability, such as systems that supply gas, water, or electricity, or systems that operate continuously 24 hours a day
  - Other systems that require a similar high degree of safety
- Never use the product for an application involving serious risk to life or property without first ensuring that the system is designed to secure the required level of safety with risk warnings and redundancy, and that the Yaskawa product is properly rated and installed.
- The circuit examples and other application examples described in product catalogs and manuals are for reference. Check the functionality and safety of the actual devices and equipment to be used before using the product.
- Read and understand all use prohibitions and precautions, and operate the Yaskawa product correctly to prevent accidental harm to third parties.

i.7.4 Specifications Change

The names, specifications, appearance, and accessories of products in product catalogs and manuals may be changed at any time based on improvements and other reasons. The next editions of the revised catalogs or manuals will be published with updated code numbers. Consult with your Yaskawa representative to confirm the actual specifications before purchasing a product.

i.8 Compliance with UL Standards, EU Directives, and Other Safety Standards

Certification marks for the standards for which the product has been certified by certification bodies are shown on nameplate. Products that do not have the marks are not certified for the standards.

Refer to the servomotor manual for compliant standards of servomotors.

i.8.1 North American Safety Standards (UL)

Product	Model	North American Safety Standards (UL File No.)
SERVOPACK	SGDXS	UL 61800-5-1 (E147823), CSA C22.2 No.274

i.8.2 EU Directives

Product	Model	EU Directives	Harmonized Standards
SERVOPACK	SGDXS	Machinery Directive 2006/42/EC	EN ISO 13849-1 : 2015 EN IEC 62061 EN 61800-5-2
		EMC Directive 2014/30/EU	EN 55011 group 1, class A EN 61000-6-2 EN 61000-6-4 EN 61800-3 (Category C2, Second environment)
		Low Voltage Directive 2014/35/EU	EN 61800-5-1
		RoHS Directive 2011/65/EU (EU)2015/863	EN IEC 63000
		WEEE Directive 2012/19/EU	–

Note:

- We declared the CE Marking based on the harmonized standards in the above table. These products complied with the corresponding IEC standards. Refer to the declaration of conformity for details.
- These products are for industrial use. In home environments, these products may cause electromagnetic interference and additional noise reduction measures may be necessary.

i.8.3 UK Conformity Assessed (UKCA)

Product	Model	UK Regulations	Designated Standards
SERVOPACKs	SGDXS	Supply of Machinery (Safety) Regulations S.I. 2008/1597	EN ISO 13849-1 : 2015 EN IEC 62061 EN 61800-5-2
		Electromagnetic Compatibility Regulations S.I. 2016/1091	EN 55011 Group 1, Class A EN 61000-6-2 EN 61000-6-4 EN 61800-3 (Category C2, Second environment)
		Electrical Equipment (Safety) Regulations S.I. 2016/1101	EN 61800-5-1
		RoHS Directive S.I. 2012/3032	EN IEC 63000

Note:

We declared the UKCA marking based on the designated standards in the above table.

i.8.4 Safety Standards

Product	Model	Standards
SERVOPACK	SGDXS	EN ISO 13849-1 : 2015 EN IEC 62061 EN 61800-5-2 EN 61000-6-7 EN 61326-3-1 EN 61508 series

Note:

These products complied with the corresponding IEC standards. Refer to the declaration of conformity for details.

- Safety Parameters

Item	Standards	Performance Level
Safety Integrity Level	EN 61508	SIL3
	EN IEC 62061	maximum SIL3
Mission Time	EN ISO 13849-1	20 years
Probability of Dangerous Failure per Hour	EN 61508 EN IEC 62061	PFH = 8.57×10^{-9} [1/h] (8.57% of SIL3)
Performance Level	EN ISO 13849-1	PL e (Category 3)
Mean Time to Dangerous Failure of Each Channel	EN ISO 13849-1	MTTFd: High
Average Diagnostic Coverage	EN ISO 13849-1	DCavg: Medium
Stop Category	EN 60204-1	Stop category 0
Safety Functions	EN 61800-5-2	STO

Continued on next page.

Continued from previous page.

Item	Standards	Performance Level
Hardware Fault Tolerance	EN 61508	HFT = 1
Subsystem	EN 61508	B

Note:

Mission time is a parameter used in the statistic calculation required by functional safety standards. Mission time is not related to the warranty period.

1

Basic Information on SERVOPACKs

This chapter provides information required to select SERVOPACKs, such as SERVOPACK model numbers and combinations with servomotors.

1.1 The Σ-X Series 52

1.2 Interpreting the Nameplate 53

1.3 Part Names 54

1.4 Interpreting Model Numbers 56

1.4.1 Interpreting SERVOPACK Model Numbers 56

1.4.2 Interpreting Servomotor Model Numbers 57

1.5 Combinations of SERVOPACKs and Servomotors 59

1.5.1 Combinations of Rotary Servomotors and SERVOPACKs 59

1.5.2 Combinations of Direct Drive Servomotors and SERVOPACKs 62

1.5.3 Combinations of Linear Servomotors and SERVOPACKs 64

1.6 Functions 66

1.6.1 Function Support by Software Version 68

1.1 The Σ-X Series

The Σ-X-series SERVOPACKs are designed for applications that require frequent high-speed and high-precision positioning. The SERVOPACK will make the most of machine performance in the shortest time possible, thus contributing to improving productivity.

Σ-X-series SERVOPACKs are available in the three models shown below.

Model Name	Description
Σ-XS	Single-axis SERVOPACKs
Σ-XW	Two-axis SERVOPACKs
Σ-XT	Three-axis SERVOPACKs

1.2 Interpreting the Nameplate

The following basic information is provided on the nameplate.

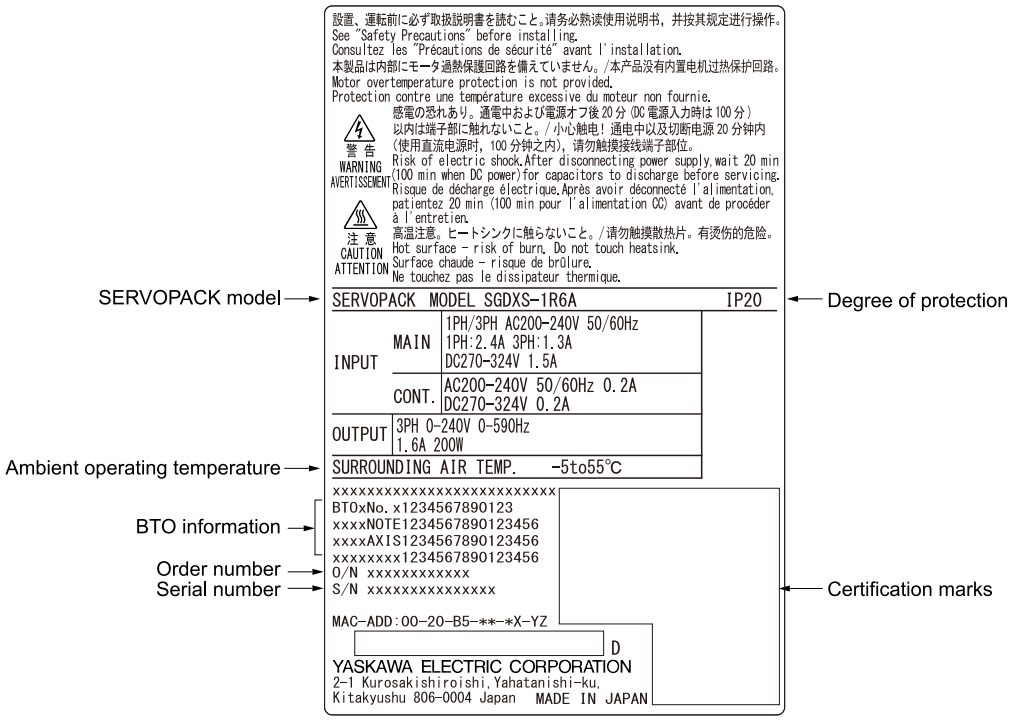

1.3 Part Names

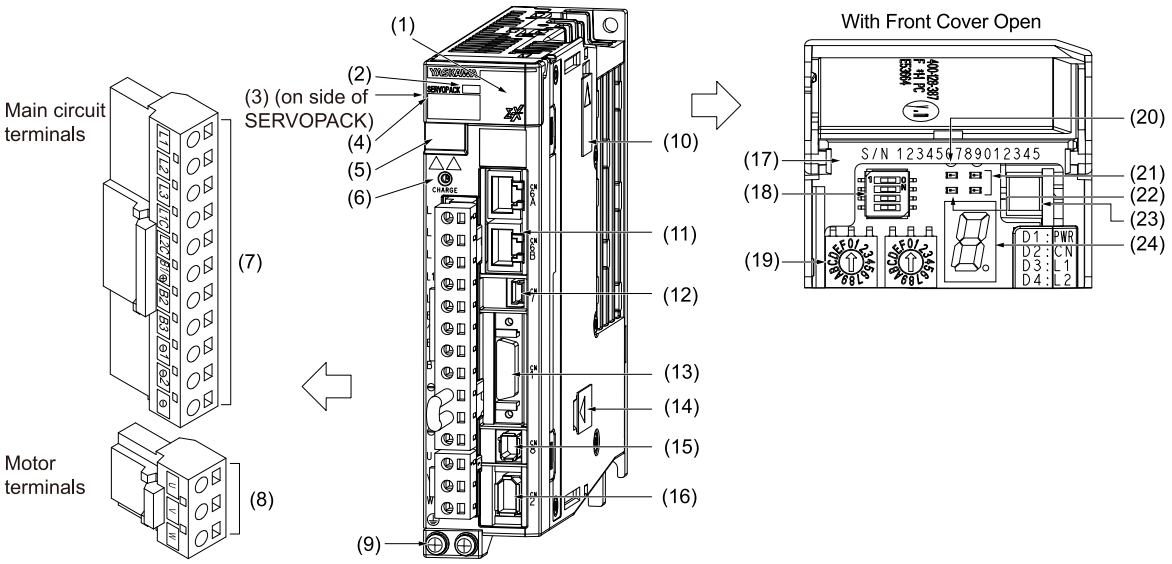

No.	Name	Description	Reference
(1)	Front Cover	–	–
(2)	Input Voltage	–	–
(3)	Nameplate	Indicates the SERVOPACK model and ratings.	53
(4)	Model	The model of the SERVOPACK.	56
(5)	QR Code	The QR code that is used by the MechatroCloud service.	–
(6)	CHARGE	Lit while the main circuit power is being supplied. **Note:** Even if you turn OFF the main circuit power supply, this indicator will be lit as long as the internal capacitor remains charged. Do not touch the main circuit or motor terminals while this indicator is lit. There is a risk of electric shock.	–
(7)	Main Circuit Terminals	The terminals depend on the main circuit power supply input specifications of the SERVOPACK.	127
(8)	Servomotor Terminals (U, V, and W)	The connection terminals for the servomotor main circuit cable (power line).	143
(9)	Ground Terminal (⏚)	The ground terminals to prevent electric shock. Always connect this terminal.	–
(10)	Safety Option Module Connector (CN11)	Connects to a safety option module.	–
(11)	Communications LED Indicator Array	Displays the LED indicator array for EtherCAT communications inside the front cover.	–
(12)	EtherCAT Communications Connectors (ETHERCAT IN: CN6A, ETHERCAT OUT:CN6B)	Connects to EtherCAT devices.	162
(13)	Personal Computer Connector (CN7)	A USB connector to connect a personal computer. The digital operator can also be connected.	163, 164
(14)	I/O Signal Connector (CN1)	Connects to sequence I/O signals.	153
(15)	Feedback Option Module Connector (CN12)	Connects to a feedback option module.	–
(16)	Safety Connector (CN8)	Connects to a safety function device.	160

Continued on next page.

Continued from previous page.

No.	Name		Description	Reference
(17)	Encoder Cable Connector (CN2)		This connector is used for the following purposes. • Rotary servomotor: Connects to the encoder in the servomotor. • Linear servomotor: Connects to the serial converter unit or linear encoder. • Connects to Σ-LINK II-compatible sensors and the Σ-LINK II sensor hub.	143
(18)	Serial Number		–	–
(19)	DIP Switch (S3)		Not used.	–
(20)	ID Selector (S1, S2)		This switch is used for identification of the EtherCAT slave device.	588
(21)	Communications Status LEDs	ERR	Shows the error status of EtherCAT communications.	858
(22)		L/A A	Used to check whether communications are active on the CN6A connector.	
		L/A B	Used to check whether communications are active on the CN6B connector.	
(23)		RUN	Shows the status of EtherCAT communications.	
(24)	Analog Monitor Connector (CN5)		You can use a special cable (peripheral device) to monitor the motor speed, torque reference, or other values.	165
(25)	Panel Display		Displays the servo status with a seven-segment LED.	860

1.4 Interpreting Model Numbers

1.4.1 Interpreting SERVOPACK Model Numbers

SGDXS - R70 A A0 A 0001 00 B

Σ-X-Series
Σ-XS model

1st+2nd+3rd digits | 4th digit | 5th+6th digits | 7th digit | 8th+9th+10th+11th digits | 12th+13th digits | 14th digit

1st+2nd+3rd digits Maximum Applicable Motor Capacity

Voltage	Code	Specification
Three-Phase, 200 VAC	R70*1	0.05 kW
	R90*1	0.1 kW
	1R6*1	0.2 kW
	2R8*1	0.4 kW
	3R8	0.5 kW
	5R5*1	0.75 kW
	7R6	1.0 kW
	120*2	1.5 kW
	180	2.0 kW
	200	3.0 kW
	330	5.0 kW
	470	6.0 kW
	550	7.5 kW
	590	11 kW
	780	15 kW
Three-Phase, 400 VAC	1R9	0.5 kW
	3R5	1.0 kW
	5R4	1.5 kW
	8R4	2.0 kW
	120	3.0 kW
	170	5.0 kW
	210	6.0 kW
	260	7.5 kW
	280	11 kW
	370	15 kW

4th digit Voltage

Code	Specification
A	200 VAC
D	400 VAC

5th+6th digits Interface *3

Code	Specification
A0	EtherCAT communications reference

7th digit Design Revision Order

A

8th+9th+10th+11th digits Hardware Options Specification

Code	Specification	Applicable Models
None	Without options	All models
0000		
0001	Rack-mounted	SGDXS-R70A to -330A, -1R9D to -170D
	Duct-ventilated	SGDXS-470A to -780A, -210D to -370D
0002	Varnished	All models
0008	Single-phase, 200-VAC power supply input	SGDXS-120A
0020*4	No dynamic brake	SGDXS-R70A to -2R8A
	External dynamic brake resistor	SGDXS-3R8A to -780A, -1R9D to -370D

12th+13th digits FT Specification

Code	Specification
None	None
00	

14th digit BTO Specification (under development)

Code	Specification
None	None
B	BTO specification

*1 You can use these models with either a single-phase or three-phase input.
*2 A model with a single-phase, 200-VAC power supply input is available as a hardware option specification. (model: SGDXS-120AA0A0008)
*3 The same SERVOPACKs are used for both rotary servomotors and linear servomotors.
*4 Refer to the following manual for details.

Σ-X-Series Σ-XS/Σ-XW/Σ-XT SERVOPACK with Dynamic Brake Hardware Option Specifications Product Manual (Manual No.: SIEP C710812 14)

1.4.2 Interpreting Servomotor Model Numbers

This section outlines the model numbers of servomotors that can be combined with a Σ-X-series SERVOPACK. Refer to the relevant manual in the following list for details.

- Σ-X-series Rotary Servomotor Product Manual (Manual No.: SIEP C230210 00)
- Σ-7-series Rotary Servomotor Product Manual (Manual No.: SIEP S800001 36)
- Σ-7-series Linear Servomotor Product Manual (Manual No.: SIEP S800001 37)
- Σ-7-Series Direct Drive Servomotor Product Manual (Manual No.: SIEP S800001 38)

(1) Rotary Servomotors

SGM□□ - 01 A U A 2 1 A 1

Series | 1st+2nd digits | 3rd digit | 4th digit | 5th digit | 6th digit | 7th digit | 8th digit | 9th digit

Series

Σ-X Series Servomotors

Code	Specification
SGMXJ	Medium inertia, high speed
SGMXA	Low inertia, high speed
SGMXP	Medium inertia, flat
SGMXG	Medium inertia, low speed, high torque

Σ-7 Series Servomotors

Code	Specification
SGM7M	Low inertia, ultra-small capacity

1st+2nd digits Rated Output

3rd digit Power Supply Voltage
- 200 VAC
- 400 VAC

4th digit Serial Encoder Specification
- 20-bit absolute encoder
- 26-bit batteryless absolute encoder
- 26-bit absolute encoder

5th digit Design Revision Order

6th digit Shaft End Specification
- Straight without key
- Straight with tap
- Straight with key and tap
- Straight with flat seat
- With two flat seats

7th digit Option Specification
- With 24-V holding brake
- With oil seal

8th digit Destination

A

9th digit Ancillary Specification

Code	Specification
1	Standard
2	Σ-7 compatible
3	Functional safety

(2) Direct Drive Servomotors

SGM□□ - 02 B 3 C 1 1

Series | 1st+2nd digits | 3rd digit | 4th digit | 5th digit | 6th digit | 7th digit

Series Σ-7 Series Servomotors

Code	Specification
SGM7D	With core outer rotor
SGM7E	Small capacity, coreless inner rotor
SGM7F	Small capacity,with core inner rotor
	Medium capacity, with core inner rotor

1st+2nd digits Rated Torque

3rd digit Servomotor Outer Diameter

4th digit Serial Encoder Specification

5th digit Design Revision Order

6th digit Flange Specification
- Cable drawn to load side
- Cable drawn to non-load side

7th digit Option Specification
- High mechanical precision

(3) Linear Servomotors

SGL □ □ - 30 A 050 C P □

Series | 1st digit | 2nd digit | 3rd digit on

Series Σ-7 Series Servomotors

1st digit Servomotor Type

Code	Specification
G	Coreless models
F	Models with F-type iron core
T	Models with T-type iron core

2nd digit Moving Coil/Magnetic Way

Code	Specification
W	Moving coil
W2	
M	Magnetic way
M2	

3rd digit on

The specifications for the 3rd digit on depend on the servomotor type.

1.5 Combinations of SERVOPACKs and Servomotors

1.5.1 Combinations of Rotary Servomotors and SERVOPACKs

(1) Three-Phase, 200 VAC

Rotary Servomotor Model		Capacity	SERVOPACK Model
			SGDXS-
SGMXJ (Medium Inertia, Small Capacity) 3000 min^{-1}	SGMXJ-A5A	50 W	R70A
	SGMXJ-01A	100 W	R90A
	SGMXJ-C2A	150 W	1R6A
	SGMXJ-02A	200 W	
	SGMXJ-04A	400 W	2R8A
	SGMXJ-06A	600 W	5R5A
	SGMXJ-08A	750 W	
SGMXA (Low Inertia, Small Capacity) 3000 min^{-1}	SGMXA-A5A	50 W	R70A
	SGMXA-01A	100 W	R90A
	SGMXA-C2A	150 W	1R6A
	SGMXA-02A	200 W	
	SGMXA-04A	400 W	2R8A
	SGMXA-06A	600 W	5R5A
	SGMXA-08A	750 W	
	SGMXA-10A	1.0 kW	120A
	SGMXA-15A	1.5 kW	
	SGMXA-20A	2.0 kW	180A
	SGMXA-25A	2.5 kW	200A
	SGMXA-30A	3.0 kW	
	SGMXA-40A	4.0 kW	330A
	SGMXA-50A	5.0 kW	
	SGMXA-70A	7.0 kW	550A
SGMXP (Medium Inertia, Flat) 3000 min^{-1}	SGMXP-01A	100 W	R90A
	SGMXP-02A	200 W	2R8A
	SGMXP-04A	400 W	
	SGMXP-08A	750 W	5R5A
	SGMXP-15A	1.5 kW	120A

Continued on next page.

Continued from previous page.

Rotary Servomotor Model		Capacity	SERVOPACK Model
			SGDXS-
SGMXG (Medium Inertia, Medium Capacity) 1500 min-1	SGMXG-03A	300 W	3R8A
	SGMXG-05A	450 W	
	SGMXG-09A	850 W	7R6A (120A) *1
	SGMXG-13A	1.3 kW	120A (180A) *1
	SGMXG-20A	1.8 kW	180A (200A) *1
	SGMXG-30A	2.9 kW *2	330A (470A) *1
	SGMXG-44A	4.4 kW	330A (550A) *1
	SGMXG-55A	5.5 kW	470A (780A) *1
	SGMXG-75A	7.5 kW	550A
	SGMXG-1AA	11 kW	590A
	SGMXG-1EA	15 kW	780A
SGM7M (Low Inertia, Ultra-small Capacity) 3000 min-1	SGM7M-A1A	11 W	R90A
	SGM7M-A2A	22 W	
	SGM7M-A3A	33 W	1R6A

*1 To increase the instantaneous maximum torque, use the SERVOPACK with the model number given inside the parentheses. Refer to the following manual for the instantaneous maximum torque of each SERVOPACK.

Σ-X-Series Rotary Servomotor Product Manual (Manual No.: SIEP C230210 00)

*2 2.4 kW when using the servomotor with a SGDXS-200A SERVOPACK.

(2) Three-Phase, 400 VAC

Rotary Servomotor Model		Capacity	SERVOPACK Model
			SGDXS-
SGMXA (Low Inertia, High Speed) 3000 min-1	SGMXA-15D	1.5 kW	5R4D
	SGMXA-20D	2.0 kW	8R4D
	SGMXA-25D	2.5 kW	120D
	SGMXA-30D	3.0 kW	120D
	SGMXA-40D	4.0 kW	170D
	SGMXA-50D	5.0 kW	170D
SGMXP (Medium Inertia, Flat) 3000 min-1	SGMXP-02D	200 W	1R9D
	SGMXP-04D	400 W	1R9D
	SGMXP-08D	750 W	3R5D
	SGMXP-15D	1.5 kW	5R4D

Continued on next page.

Continued from previous page.

Rotary Servomotor Model		Capacity	SERVOPACK Model
			SGDXS-
SGMXG (Medium inertia, Low Speed, High Torque) 1500 min^{-1}	SGMXG-05D	450 W	1R9D
	SGMXG-09D	850 W	3R5D (5R4D) *1
	SGMXG-13D	1.3 kW	5R4D (8R4D) *1
	SGMXG-20D	1.8 kW	8R4D (120D) *1
	SGMXG-30D	2.9 kW	120D (210D) *1
	SGMXG-44D	4.4 kW	170D (260D) *1
	SGMXG-55D	5.5 kW	210D (370D) *1
	SGMXG-75D	7.5 kW	260D
	SGMXG-1AD	11 kW	280D
	SGMXG-1ED	15 kW	370D

*1 To increase the instantaneous maximum torque, use the SERVOPACK with the model number given inside the parentheses. Refer to the following manual for the instantaneous maximum torque of each SERVOPACK.

Σ-X-Series Rotary Servomotor Product Manual (Manual No.: SIEP C230210 00)

1.5.2 Combinations of Direct Drive Servomotors and SERVOPACKs

Direct Drive Servomotor Model		Rated Torque N·m	Instantaneous Maximum Torque N·m	SERVOPACK Model SGDXS-
SGM7D (With Core, Outer Rotor)	SGM7D-30F	30.0	50.0	120A
	SGM7D-58F	58.0	100	
	SGM7D-90F	90.0	150	
	SGM7D-1AF	110	200	
	SGM7D-01G	1.30	4.00	2R8A
	SGM7D-05G	5.00	6.00	
	SGM7D-08G	8.00	15.0	120A
	SGM7D-18G	18.0	30.0	
	SGM7D-24G	24.0	45.0	
	SGM7D-34G	34.0	60.0	
	SGM7D-45G	45.0	75.0	
	SGM7D-03H	3.00	4.00	2R8A
SGM7D (With Core, Outer Rotor)	SGM7D-28I	28.0	50.0	120A
	SGM7D-70I	70.0	100	
	SGM7D-1ZI	100	150	
	SGM7D-1CI	130	200	
	SGM7D-2BI	220	300	
	SGM7D-2DI	240	400	
	SGM7D-06J	6.00	8.00	
	SGM7D-09J	9.00	15.0	
	SGM7D-18J	18.0	30.0	
	SGM7D-20J	20.0	45.0	
	SGM7D-38J	38.0	60.0	
	SGM7D-02K	2.06	5.00	2R8A
	SGM7D-06K	6.00	10.0	
	SGM7D-08K	8.00	15.0	
	SGM7D-06L	6.00	10.0	
	SGM7D-12L	12.0	20.0	
	SGM7D-30L	30.0	40.0	120A

Continued on next page.

Continued from previous page.

Direct Drive Servomotor Model		Rated Torque N·m	Instantaneous Maximum Torque N·m	SERVOPACK Model SGDXS-
SGM7E (Small Capacity, Coreless, Inner Rotor)	SGM7E-02B	2	6	2R8A
	SGM7E-05B	5	15	
	SGM7E-07B	7	21	
	SGM7E-04C	4	12	
	SGM7E-10C	10	30	
	SGM7E-14C	14	42	
	SGM7E-08D	8	24	
	SGM7E-17D	17	51	
	SGM7E-25D	25	75	
	SGM7E-16E	16	48	5R5A
	SGM7E-35E	35	105	
SGM7F (Small Capacity, With Core, Inner Rotor)	SGM7F-02A	2	6	2R8A
	SGM7F-05A	5	15	
	SGM7F-07A	7	21	
	SGM7F-04B	4	12	
	SGM7F-10B	10	30	
	SGM7F-14B	14	42	5R5A
	SGM7F-08C	8	24	2R8A
	SGM7F-17C	17	51	5R5A
	SGM7F-25C	25	75	7R6A
	SGM7F-16D	16	48	5R5A
	SGM7F-35D	35	105	7R6A *1, 120A
SGM7F (Medium Capacity, With Core, Inner Rotor)	SGM7F-45M	45	135	7R6A
	SGM7F-80M	80	240	120A
	SGM7F-80N	80	240	
	SGM7F-1AM	110	330	180A
	SGM7F-1EN	150	450	200A
	SGM7F-2ZN	200	600	

*1 For this combination, use the following derated values for the rated output and rated rotation speed.

- Rated output: 1000 W
- Rated rotation speed: 270 min^{-1}

1.5.3 Combinations of Linear Servomotors and SERVOPACKs

(1) Three-Phase, 200 VAC

Linear Servomotor Model		Rated Force N	Instantaneous Maximum Force N	SERVOPACK Model SGDXS-
SGLG (Coreless) Used with Standard-Force Magnetic Way	SGLGW-30A050C	12.5	40	R70A
	SGLGW-30A080C	25	80	R90A
	SGLGW-40A140C	47	140	
	SGLGW-40A253C	93	280	1R6A
	SGLGW-40A365C	140	420	2R8A
	SGLGW-60A140C	70	220	1R6A
	SGLGW-60A253C	140	440	2R8A
	SGLGW-60A365C	210	660	5R5A
	SGLGW-90A200C	325	1300	120A
	SGLGW-90A370C	550	2200	180A
	SGLGW-90A535C	750	3000	200A
SGLG (Coreless) Used with High-Force Magnetic Way	SGLGW-40A140C	57	230	1R6A
	SGLGW-40A253C	114	460	2R8A
	SGLGW-40A365C	171	690	3R8A
	SGLGW-60A140C	85	360	1R6A
	SGLGW-60A253C	170	720	3R8A
	SGLGW-60A365C	255	1080	7R6A
SGLF (With F-type Iron Cores)	SGLFW2-30A070A	45	135	1R6A
	SGLFW2-30A120A	90	270	
	SGLFW2-30A230A *1	180	540	3R8A
		170	500	2R8A
	SGLFW2-45A200A	280	840	5R5A
	SGLFW2-45A380A *1	560	1680	180A
			1500	120A
	SGLFW2-90A200A□1	560	1680	
	SGLFW2-90A200A□L	896	1680	
	SGLFW2-90A380A	1120	3360	200A
	SGLFW2-90A560A	1680	5040	330A
	SGLFW2-1DA380A	1680	5040	200A
	SGLFW2-1DA560A	2520	7560	330A

Continued on next page.

Continued from previous page.

Linear Servomotor Model		Rated Force N	Instantaneous Maximum Force N	SERVOPACK Model SGDXS-
SGLT (With T-type Iron Cores)	SGLTW-20A170A	130	380	3R8A
	SGLTW-20A320A	250	760	7R6A
	SGLTW-20A460A	380	1140	120A
	SGLTW-35A170A	220	660	5R5A
	SGLTW-35A170H	300	600	
	SGLTW-35A320A	440	1320	120A
	SGLTW-35A320H	600	1200	
	SGLTW-35A460A	670	2000	180A
	SGLTW-40A400B	670	2600	
	SGLTW-40A600B	1000	4000	330A
	SGLTW-50A170H	450	900	5R5A
	SGLTW-50A320H	900	1800	120A
	SGLTW-80A400B	1300	5000	330A
	SGLTW-80A600B	2000	7500	550A

*1 The force depends on the SERVOPACK that is used with the servomotor.

(2) Three-Phase, 400 VAC

Linear Servomotor Model		Rated Force N	Instantaneous Maximum Force N	SERVOPACK Model SGDXS-
SGLT (With T-type Iron Cores)	SGLTW-35D170H	300	600	3R5D
	SGLTW-35D320H	600	1200	8R4D
	SGLTW-40D400B	670	2600	120D
	SGLTW-40D600B	1000	4000	170D
	SGLTW-50D170H	450	900	3R5D
	SGLTW-50D320H	900	1800	8R4D
	SGLTW-80D400B	1300	5000	170D
	SGLTW-80D600B	2000	7500	260D

1.6 Functions

This section lists the functions provided by SERVOPACKs. Refer to the reference pages for details on the functions.

- Functions Related to the Machine

Function	Reference
Setting the Power Supply Type for the Main Circuit and Control Circuit	178
Automatic Detection of Connected Motor	180
Setting the Motor Direction	181
Setting the Linear Encoder Pitch	183
Writing the Linear Servomotor Parameters	184
Selecting the Phase Sequence for a Linear Servomotor	188
Setting the Polarity Sensor	190
Polarity Detection	191
Overtravel Function and Settings	194
Holding Brake	200
Motor Stopping Methods for Servo OFF and Alarms	204
Resetting the Absolute Encoder	217
Setting the Origin of the Absolute Encoder	220
Setting the Regenerative Resistor Capacity	223
Operation for Momentary Power Interruptions	244
SEMI F47 Function	245
Setting the Maximum Motor Speed	247
Software Limits	255
Setting the Multiturn Limit	265
Adjusting the Motor Current Detection Signal Offset	279
Forcing the Motor to Stop	283
Overheat Protection	286
Triggers at Preset Positions	289
Rotational Coordinate System	297
Specifying Output Status When a Host Communications Error Occurs	302
Speed Ripple Compensation	421
Selecting the Current Control Mode	464
Setting the Current Gain Level	464
Selecting the Speed Detection Method	464
Fully-Closed Loop Control	525
Σ-LINK II Function	539
Safety Function	567
Touch Probe	618
Sync Error Count Limit Setting	645

- Functions Related to the Host Controller

Function	Reference
Electronic Gear Settings	209
Allocating the I/O Signal	230
ALM (Servo Alarm Output) Signal	236
/WARN (Warning Output) Signal	237
/TGON (Rotation Detection Output) Signal	237
/S-RDY (Servo Ready Output) Signal	238
/V-CMP (Speed Coincidence Detection Output) Signal	239
/COIN (Positioning Completion Output) Signal	240
/NEAR (Near Output) Signal	241
Speed Limit during Torque Control	242
/VLT (Speed Limit Detection Output) Signal	242
Encoder Divided Pulse Output	248
Selecting Torque Limits	256
Initializing the Vibration Detection Level	276
Alarm Reset	730
Replacing the Battery	695
Setting the Position Deviation Overflow Alarm Level	339

- Functions to Achieve Optimum Motions

Function	Reference
Tuning-less Function	343
Autotuning without a Host Reference	369
Autotuning with a Host Reference	388
Custom Tuning	402
Anti-Resonance Control Adjustment	411
Vibration Suppression	417
Load Fluctuation Compensation Control	443
Less-Deviation Control Function	446
Gain Selection	455
Friction Compensation	460
Gravity Compensation	462
Output Torque Compensation	463
Backlash Compensation	465
Model Following Control	478
Low-Frequency Control Function	482
Compatible Adjustment Functions	485
Mechanical Analysis	489
Easy FFT	490

- Functions for Trial Operation during Setup

Function	Reference
Software Reset	274
Trial Operation for the Servomotor without a Load	313
Program Jogging	319
Origin Search	324
Test without a Motor	326
Monitoring Machine Operation Status and Signal Waveforms	506

- Functions for Inspection and Maintenance

Function	Reference
Write Prohibition Setting for Parameters	173
Initializing Parameter Settings	176
Automatic Detection of Connected Motor	180
Monitoring Product Information	496
Monitoring Product Life	514
Error Detection Setting	518
Displaying the Alarm History	731
Alarm Tracing	517

1.6.1 Function Support by Software Version

Available functions depend on the SERVOPACK software version.
The software version in which each function can be used is listed below.

Function	Software Version
Less-Deviation Control Function	Version 000F or later
Low-Frequency Control Function	Version 000F or later

2

Selecting a SERVOPACK

Provides information required to select SERVOPACKs, such as specifications, block diagrams, dimensional drawings, and connection examples.

2.1 Ratings and Specifications 70
2.1.1 Ratings 70
2.1.2 SERVOPACK Overload Protection Characteristics 74
2.1.3 Specification 75

2.2 Block Diagrams 79
2.2.1 SGDXS-R70A, -R90A, -1R6A 79
2.2.2 SGDXS-2R8A 79
2.2.3 SGDXS-3R8A 80
2.2.4 SGDXS-5R5A, -7R6A 80
2.2.5 SGDXS-120A 81
2.2.6 SGDXS-180A, -200A 82
2.2.7 SGDXS-330A 83
2.2.8 SGDXS-470A, -550A 84
2.2.9 SGDXS-590A, -780A 85
2.2.10 SGDXS-1R9D, -3R5D, -5R4D, -8R4D, -120D, -170D 85
2.2.11 SGDXS-210D, -260D, -280D, -370D 86

2.3 External Dimensions 87
2.3.1 Front Cover Dimensions and Connector Specifications 87
2.3.2 SERVOPACK External Dimensions 88

2.4 Examples of Standard Connections between SERVOPACKs and Peripheral Devices 98
2.4.1 Rotary Servomotor 98
2.4.2 Linear Servomotor 100

2.1 Ratings and Specifications

This section gives the ratings and specifications of SERVOPACKs.

2.1.1 Ratings

(1) Three-phase, 200 VAC

Model SGDXS-			R70A	R90A	1R6A	2R8A	3R8A	5R5A	7R6A	120A	180A	200A	330A
Maximum Applicable Motor Capacity [kW]			0.05	0.1	0.2	0.4	0.5	0.75	1.0	1.5	2.0	3.0	5.0
Continuous Output Current [Arms]			0.66	0.91	1.6	2.8	3.8	5.5	7.6	11.6	18.5	19.6	32.9
Instantaneous Maximum Output Current [Arms]			2.1	3.2	5.9	9.3	11	16.9	17	28	42	56	84
Main Circuit	Power Supply		200 VAC to 240 VAC, 50 Hz/60 Hz										
	Allowable Voltage Fluctuation		-15% to +10%										
	Input Current [Arms] *1		0.4	0.8	1.3	2.5	3.0	4.1	5.7	7.3	10	15	25
Control	Power Supply		200 VAC to 240 VAC, 50 Hz/60 Hz										
	Allowable Voltage Fluctuation		-15% to +10%										
	Input Current [Arms] *1		0.2	0.2	0.2	0.2	0.2	0.2	0.2	0.2	0.25	0.25	0.3
Power Supply Capacity [kVA] *1			0.2	0.3	0.5	1.0	1.3	1.6	2.3	3.2	4.0	5.9	7.5
Power Loss *1	Main Circuit Power Loss [W]		5.0	7.0	11.9	22.5	28.5	38.9	49.2	72.6	104.2	114.2	226.6
	Control Circuit Power Loss [W]		12	12	12	12	14	14	14	15	16	16	19
	Total Power Loss [W]		17.0	19.0	23.9	34.5	42.5	52.9	63.2	87.6	120.2	130.2	245.6
Regenerative Resistor	Built-In Regenerative Resistor	Resistance [Ω]	–	–	–	–	35	35	35	20	12	10	6
		Capacity [W]	–	–	–	–	60	60	60	60	60	60	180
		Allowable Power Consumption [W]	–	–	–	–	15	15	15	30	30	30	36
	Minimum Allowable External Resistance [Ω]		40	40	40	40	35	35	35	20	12	10	6
Overvoltage Category			III										

*1 This is the net value at the rated load.

Model SGDXS-		470A	550A	590A	780A
Maximum Applicable Motor Capacity [kW]		6.0	7.5	11	15
Continuous Output Current [Arms]		46.9	54.7	58.6	78.0
Instantaneous Maximum Output Current [Arms]		110	130	140	170
Main Circuit	Power Supply	200 VAC to 240 VAC, 50 Hz/60 Hz			
	Allowable Voltage Fluctuation	-15% to +10%			
	Input Current [Arms] *1	29	37	54	73
Control	Power Supply	200 VAC to 240 VAC, 50 Hz/60 Hz			
	Allowable Voltage Fluctuation	-15% to +10%			
	Input Current [Arms] *1	0.3	0.3	0.4	0.4
Power Supply Capacity [kVA] *1		10.7	14.6	21.7	29.6
Power Loss *1	Main Circuit Power Loss [W]	271.7	326.9	365.3	501.4
	Control Circuit Power Loss [W]	21	21	28	28
	Total Power Loss [W]	292.7	347.9	393.3	529.4
External Regenerative Resistor Unit	Resistance [Ω]	5 *2	3.13 *3	3.13 *3	3.13 *3
	Capacity [W]	880 *2	1760 *3	1760 *3	1760 *3
	Allowable Power Consumption [W]	180 *2	350 *3	350 *3	350 *3
	Minimum Allowable External Resistance [Ω]	5	2.9	2.9	2.9
Overvoltage Category		III			

*1 This is the net value at the rated load.
*2 This value is for the optional JUSP-RA29-E regenerative resistor unit.
*3 This value is for the optional JUSP-RA05-E regenerative resistor unit.

(2) Single-Phase, 200 VAC

Model SGDXS-		R70A	R90A	1R6A	2R8A	5R5A	120A
Maximum Applicable Motor Capacity [kW]		0.05	0.1	0.2	0.4	0.75	1.5
Continuous Output Current [Arms]		0.66	0.91	1.6	2.8	5.5	11.6
Instantaneous Maximum Output Current [Arms]		2.1	3.2	5.9	9.3	16.9	28
Main Circuit	Power Supply	200 VAC to 240 VAC, 50 Hz/60 Hz					
	Allowable Voltage Fluctuation	-15% to +10%					
	Input Current [Arms] *1	0.8	1.6	2.4	5.0	8.7	16 *2
Control	Power Supply	200 VAC to 240 VAC, 50 Hz/60 Hz					
	Allowable Voltage Fluctuation	-15% to +10%					
	Input Current [Arms] *1	0.2	0.2	0.2	0.2	0.2	0.2
Power Supply Capacity [kVA] *1		0.2	0.3	0.6	1.2	1.9	4.0

Continued on next page.

Continued from previous page.

Model SGDXS-			R70A	R90A	1R6A	2R8A	5R5A	120A
Power Loss *1	Main Circuit Power Loss [W]		5.0	7.1	12.1	23.7	39.2	72.6
	Control Circuit Power Loss [W]		12	12	12	12	14	15
	Total Power Loss [W]		17.0	19.1	24.1	35.7	53.2	87.6
Regenerative Resistor	Built-In Regenerative Resistor	Resistance [Ω]	–	–	–	–	35	20
		Capacity [W]	–	–	–	–	60	60
		Allowable Power Consumption [W]	–	–	–	–	15	30
	Minimum Allowable External Resistance [Ω]		40	40	40	40	35	20
Overvoltage Category			III					

*1 This is the net value at the rated load.
*2 Derate to 12 Arms for UL certification.

(3) 270 VDC

Model SGDXS-		R70A	R90A	1R6A	2R8A	3R8A	5R5A	7R6A	120A
Maximum Applicable Motor Capacity [kW]		0.05	0.1	0.2	0.4	0.5	0.75	1.0	1.5
Continuous Output Current [Arms]		0.66	0.91	1.6	2.8	3.8	5.5	7.6	11.6
Instantaneous Maximum Output Current [Arms]		2.1	3.2	5.9	9.3	11.0	16.9	17.0	28.0
Main Circuit	Power Supply	270 VDC to 324 VDC							
	Allowable Voltage Fluctuation	-15% to +10%							
	Input Current [Arms] *1	0.5	1.0	1.5	3.0	3.8	4.9	6.9	11
Control	Power Supply	270 VDC to 324 VDC							
	Allowable Voltage Fluctuation	-15% to +10%							
	Input Current [Arms] *1	0.2	0.2	0.2	0.2	0.2	0.2	0.2	0.2
Power Supply Capacity [kVA] *1		0.2	0.3	0.6	1	1.4	1.6	2.3	3.2
Power Loss *1	Main Circuit Power Loss [W]	4.4	5.9	9.8	17.5	23.0	30.7	38.7	55.8
	Control Circuit Power Loss [W]	12	12	12	12	14	14	14	15
	Total Power Loss [W]	16.4	17.9	21.8	29.5	37.0	44.7	52.7	70.8
Overvoltage Category		III							

*1 This is the net value at the rated load.

Model SGDXS-	180A	200A	330A	470A	550A	590A	780A
Maximum Applicable Motor Capacity [kW]	2.0	3.0	5.0	6.0	7.5	11.0	15.0
Continuous Output Current [Arms]	18.5	19.6	32.9	46.9	54.7	58.6	78.0
Instantaneous Maximum Output Current [Arms]	42.0	56.0	84.0	110	130	140	170

Continued on next page.

Continued from previous page.

Model SGDXS-		180A	200A	330A	470A	550A	590A	780A
Main Circuit	Power Supply	270 VDC to 324 VDC						
	Allowable Voltage Fluctuation	-15% to +10%						
	Input Current [Arms] *1	14	20	34	36	48	68	92
Control	Power Supply	270 VDC to 324 VDC						
	Allowable Voltage Fluctuation	-15% to +10%						
	Input Current [Arms] *1	0.25	0.25	0.3	0.3	0.3	0.4	0.4
Power Supply Capacity [kVA] *1		4.0	5.9	7.5	10.7	14.6	21.7	29.6
Power Loss *1	Main Circuit Power Loss [W]	82.7	83.5	146.2	211.6	255.3	243.6	343.4
	Control Circuit Power Loss [W]	16	16	19	21	21	28	28
	Total Power Loss [W]	98.7	99.5	165.2	232.6	276.3	271.6	371.4
Overvoltage Category		III						

*1 This is the net value at the rated load.

(4) Three-Phase, 400 VAC

Model SGDXS-			1R9D	3R5D	5R4D	8R4D	120D	170D	210D	260D	280D	370D
Maximum Applicable Motor Capacity [kW]			0.5	1	1.5	2	3	5	6	7.5	11	15
Continuous Output Current [Arms]			1.9	3.5	5.4	8.4	11.9	16.5	20.8	25.7	28.1	37.2
Instantaneous Maximum Output Current [Arms]			5.5	8.5	14	21	28	42	55	65	70	85
Main Circuit	Power Supply		380 VAC to 480 VAC, 50 Hz/60 Hz									
	Allowable Voltage Fluctuation		-15% to +10%									
	Input Current [Arms] *1		1.4	2.9	4.3	5.8	8.6	14.5	17.4	21.7	31.8	43.4
Control	Power Supply		24 VDC									
	Allowable Voltage Fluctuation		±15%									
	Input Current [Arms] *1		1.2			1.6			1.7			
Power Supply Capacity [kVA] *1			1.1	2.3	3.5	4.5	7.1	11.7	12.4	14.4	21.9	30.6
Power Loss *1	Main Circuit Power Loss [W]		24.6	46.1	71.3	77.9	109	161	173	219	295	404
	Control Circuit Power Loss [W]		21			25		24	27		30	
	Total Power Loss [W]		45.6	67.1	92.3	103	134	185	200	246	325	434
Regenerative Resistor	Built-In Regenerative Resistor	Resistance [Ω]	56			33		20	12 *2		10 *3	
		Capacity [W]	70			180			880 *2		1760 *3	
		Allowable Power Consumption [W]	14			28		36	180 *2		350 *3	
	Minimum Allowable External Resistance [Ω]		56			33		20	12		10	
Overvoltage Category			III									

*1 This is the net value at the rated load.
*2 This value is for the optional JUSP-RA30-E regenerative resistor unit.
*3 This value is for the optional JUSP-RA31-E regenerative resistor unit.

(5) 540 VDC

Model SGDXS-		1R9D	3R5D	5R4D	8R4D	120D	170D	210D	260D	280D	370D
Maximum Applicable Motor Capacity [kW]		0.5	1	1.5	2	3	5	6	7.5	11	15
Continuous Output Current [Arms]		1.9	3.5	5.4	8.4	11.9	16.5	20.8	25.7	28.1	37.2
Instantaneous Maximum Output Current [Arms]		5.5	8.5	14	21	28	42	55	65	70	85
Main Circuit	Power Supply	540 VDC to 679 VDC									
	Allowable Voltage Fluctuation	-15% to +10%									
	Input Current [Arms] *1	2	3	5.5	6.8	11	18	19.6	26.2	38.3	47.6
Control	Power Supply	24 VDC									
	Allowable Voltage Fluctuation	±15%									
	Input Current [Arms] *1	1.2			1.6			1.7			
Power Supply Capacity [kVA] *1		1.1	2.3	3.5	4.5	7.1	11.7	12.4	14.4	21.9	30.6
Power Loss *1	Main Circuit Power Loss [W]	24.6	46.1	71.3	77.9	109	161	173	219	295	404
	Control Circuit Power Loss [W]	21			25		24	27		30	
	Total Power Loss [W]	45.6	67.1	92.3	103	134	185	200	246	325	434
Overvoltage Category		III									

*1 This is the net value at the rated load.

2.1.2 SERVOPACK Overload Protection Characteristics

The overload detection level is set for hot start conditions with a SERVOPACK surrounding air temperature of 55°C.

A.710 or A.720 (an overload alarm) will occur if overload operation that exceeds the overload protection characteristics shown in the following diagram (i.e., operation on the right side of the applicable line) is performed.

The actual overload detection level will be the detection level of the connected SERVOPACK or servomotor that has the lower overload protection characteristics.

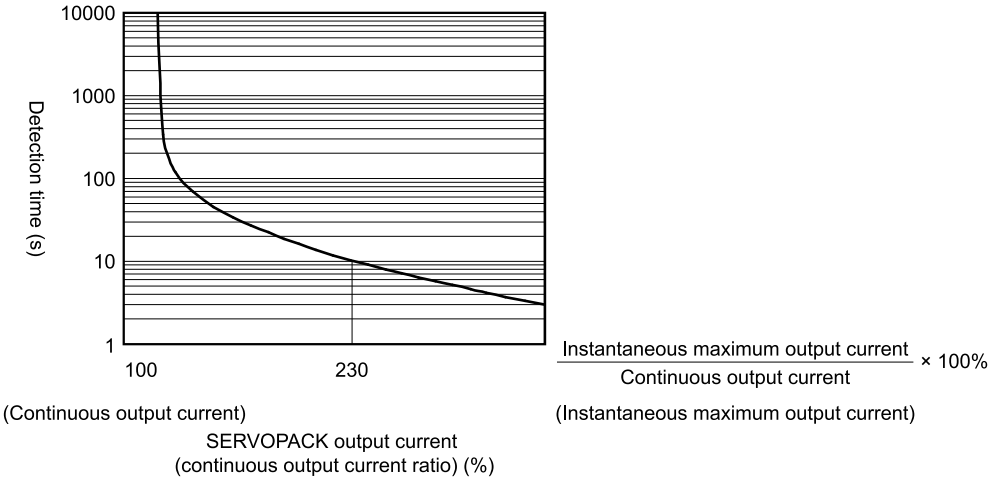

Figure 2.1 SGDXS-R70A, -R90A, -1R6A, -2R8A

Note:

- The above overload protection characteristics do not mean that you can perform continuous duty operation with an output of 100% or higher.
  For a Yaskawa-specified combination of SERVOPACK and servomotor, maintain the effective torque within the continuous duty zone of the torque-motor speed characteristic of the servomotor.
- This overload protection function is not a protection function related to speed. This product does not have a built-in thermal memory hold function.

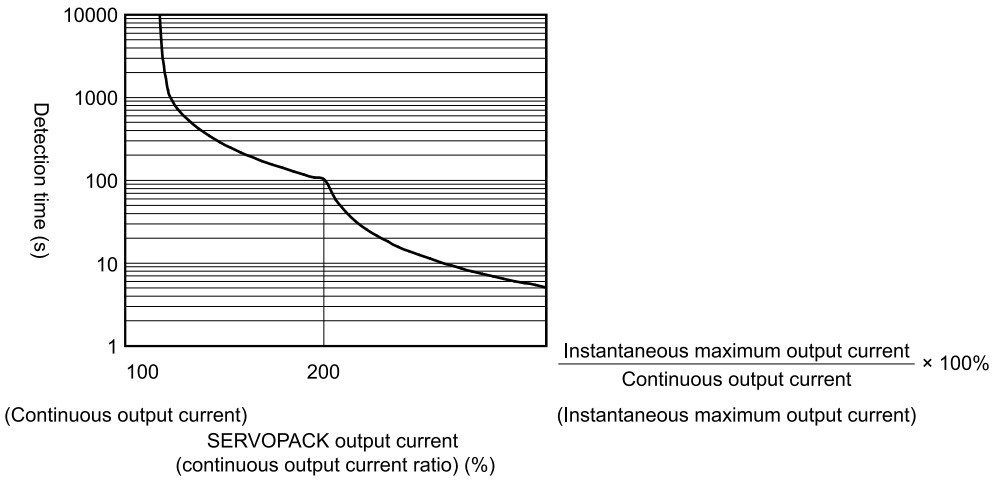

Figure 2.2 SGDXS-3R8A, -5R5A, -7R6A, -120A, -180A, -200A, -330A, -470A, -550A, -590A, -780A, -□□□D

Note:

- The above overload protection characteristics do not mean that you can perform continuous duty operation with an output of 100% or higher.
  For a Yaskawa-specified combination of SERVOPACK and servomotor, maintain the effective torque within the continuous duty zone of the torque-motor speed characteristic of the servomotor.
- This overload protection function is not a protection function related to speed. This product does not have a built-in thermal memory hold function.

2.1.3 Specification

(1) Environmental Conditions

Item	Specification
Surrounding Air Temperature	-5°C to 55°C (With derating, usage is possible between 55°C and 60°C.) Refer to the following section for derating specifications. ☞ *3.6 Derating Specifications on page 109*
Storage Temperature *1	-20°C to 85°C
Surrounding Air Humidity	95% relative humidity max. (with no freezing or condensation)
Storage Humidity	95% relative humidity max. (with no freezing or condensation)
Vibration Resistance	When there is continuous vibration: 10 Hz to 55 Hz, acceleration amplitude 5.9 m/s^2 (0.6G)
Impact Resistance	19.6 m/s^2
Degree of Protection	IP20: Models SGDXS-R70A, -R90A, -1R6A, -2R8A, -3R8A, -5R5A, -7R6A, -120A IP10: Models SGDXS-180A, -200A, -330A, -470A, -550A, -590A, -780A, -□□□D
Pollution Degree	2 • Must be no corrosive or flammable gases. • Must be no exposure to water, oil, or chemicals. • Must be no dust, salts, or iron dust.
Altitude *1	1000 m max. (With derating, usage is possible between 1000 m and 2000 m.) Refer to the following section for derating specifications. ☞ *3.6 Derating Specifications on page 109*
Others	Do not use the SERVOPACK in the following locations: Locations subject to static electricity noise, strong electro-magnetic/magnetic fields, or radioactivity

*1 If you combine a Σ-X-series SERVOPACK with a Σ-V-series option module, the following Σ-V-series SERVOPACKs specifications must be used: a surrounding air temperature of 0°C to 55°C and an altitude of 1000 m max. Also, the applicable surrounding range cannot be increased by derating.

(2) I/O Signals

Item		Specification
Encoder Divided Pulse Output		Phase A, phase B, phase C: Line-driver output Number of divided output pulses: Any setting is allowed.
Overheat Protection Input		Number of input points: 1 Input voltage range: 0 V to +5 V
Outputs for Triggers at Preset Positions		Number of output points: 3 (output method: a line driver output) Output signals: High-Speed Output Signal for Triggers at Preset Positions 1 to 3 (HSO1 to 3) **Note:** Normal Output Signal for Triggers at Preset Positions 1 to 3 (/NSO1 to 3) are used by allocating the signals to sequence output signals.
Sequence Input Signals	Input Signals That Can Be Allocated	Allowable voltage range: 24 VDC ±20% Number of input points: 7 (input method: sink inputs or source inputs)
		Input signals: • P-OT (Forward Drive Prohibit Input) and N-OT (Reverse Drive Prohibit Input) signals • /Probe1 (Probe 1 Latch Input) Signal • /Probe2 (Probe 2 Latch Input) signal • /Home (Home Switch Input) Signal • /P-CL (Forward External Torque Limit Input) and /N-CL (Reverse External Torque Limit Input) signals • FSTP (Forced Stop Input) signal A signal can be allocated and the positive and negative logic can be changed.
Sequence Output Signals	Fixed Output	Allowable voltage range: 5 VDC to 30 VDC Number of output points: 1 (output method: a photocoupler output (isolated))
		Output signal: ALM (Servo Alarm Output) signal
	Output Signals That Can Be Allocated	Allowable voltage range: 5 VDC to 30 VDC Number of output points: 3 (output method: a photocoupler output (isolated))
		Output signals: • /COIN (Positioning Completion Output) signal • /V-CMP (Speed Coincidence Detection Output) signal • /TGON (Rotation Detection Output) Signal • /S-RDY (Servo Ready Output) Signal • /CLT (Torque Limit Detection Output) signal • /VLT (Speed Limit Detection Output) signal • /BK (Brake Output) signal • /WARN (Warning Output) signal • /NEAR (Near Output) signal • /NSO1 to 3 (Normal Output for Triggers at Preset Positions 1 to 3) signals A signal can be allocated and the positive and negative logic can be changed.

(3) Function

Item			Specification
Communications	USB Communications (CN7)	Interfaces	Personal computer (with SigmaWin+), digital operator (JUSP-OP07A-E)
		Communications Standard	Conforms to USB2.0 standard (12 Mbps).
Displays/Indicators			CHARGE, RUN, ERR, L/A A, L/A B, and one-digit seven-segment LED

Continued on next page.

Continued from previous page.

Item		Specification
EtherCAT Communications Setting Switches		ID Selector (S1 and S2) positions: 16
EtherCAT Communications	Applicable Communications Standards	IEC 61158 Type 12, IEC 61800-7 CiA402 drive profile
	Physical Layer	100BASE-TX (IEEE802.3)
	Communications Connectors	CN6A (RJ45): ETHERCAT IN (EtherCAT input signal side) CN6B (RJ45): ETHERCAT OUT (EtherCAT output signal side)
	Cable	Category 5, 4 shielded twisted pairs The cable is automatically detected with AUTO MDIX.
	SyncManager	SM0: Mailbox output, SM1: Mailbox input, SM2: Process data output, and SM3: Process data input
	FMMU	FMMU 0: Mapped in process data output (RxPDO) area. FMMU 1: Mapped in process data input (TxPDO) area. FMMU 2: Mapped to mailbox status.
	EtherCAT Commands (Data Link Layer)	APRD, APWR, APRW, FPRD, FPWR, FPRW, BRD, BWR, BRW, LRD, LWR, LRW, ARMW, FRMW
	Process Data	Assignments can be changed with PDO mapping.
	Mailbox	Emergency messages, SDO requests, SDO responses
	Distributed Clocks	Free-run mode and DC mode (can be switched.) Applicable DC cycles: 62.5 μs to 4 ms in 62.5-μs increments
	Slave Information IF	4 KB
	LED Indicator	During EtherCAT communications: L/A x 2 EtherCAT communications status: RUN x 1 EtherCAT error status: ERR x 1
CiA402 Drive Profile		• Homing Mode • Profile Position Mode • Interpolated Position Mode • Profile Velocity Mode • Profile Torque Mode • Cyclic Synchronous Position Mode • Cyclic Synchronous Velocity Mode • Cyclic Synchronous Torque Mode • Touch Probe Function • Torque Limit Function
Analog Monitor (CN5)		Number of points: 2 Output voltage range: ±10 VDC (effective linearity range: ±8 V) Resolution: 16 bits Accuracy: ±20 mV (Typ) Maximum output current: ±10 mA
Dynamic Brake (DB)		Activated when a servo alarm or overtravel (OT) occurs, or when the power to the main circuit or servo is OFF.
Regenerative Processing		Built-in (An external resistor must be connected to the SGDXS-470A to -780A, and -210D to -370D.)
Overtravel (OT) Prevention		Stopping with dynamic brake, deceleration to a stop, or coasting to a stop for the P-OT (Forward Drive Prohibit Input) or N-OT (Reverse Drive Prohibit Input) signal
Protective Functions		Overcurrent, overvoltage, undervoltage, overload, regeneration error, etc.
Utility Functions		Gain tuning, alarm history, jogging operation, origin search, etc.

Continued on next page.

Continued from previous page.

Item		Specification
Safety Functions	Inputs	/HWBB1 and /HWBB2: Base block signals for power modules
	Output	EDM1: Monitors the status of built-in safety circuit (fixed output). *1
	Applicable Standards *2	ISO13849-1 PLe (Category 3) and IEC61508 SIL3

*1 Whether or not you use the EDM1 signal does not affect the performance level of safety parameters.
*2 Always perform risk assessment for the system and confirm that the safety requirements are met.

(4) Option

Item	Specification
Applicable Option Modules	• Fully-closed module • Advanced Safety Module (Model Number: SGDXS-OSA□□□)

Note:

Refer to the following manual for restrictions when using the advanced safety module and the fully-closed module together.

Σ-X-Series AC Servo Drive Advanced Safety Module with Safety over EtherCAT (FSoE) Communications References Product Manual (Manual No.: SIEP C710812 25)

Σ-X-Series AC Servo Drive Advanced Safety Module Digital I/O Product Manual (Manual No.: SIEP C710812 26)

2.2 Block Diagrams

2.2.1 SGDXS-R70A, -R90A, -1R6A

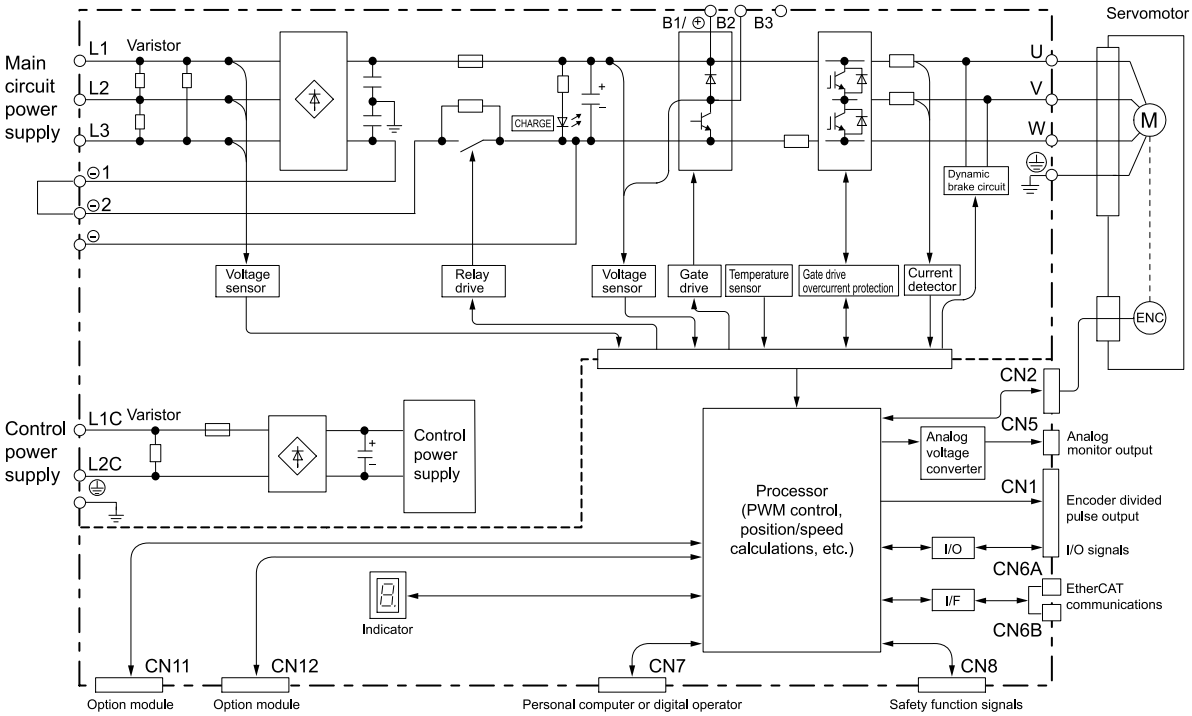

2.2.2 SGDXS-2R8A

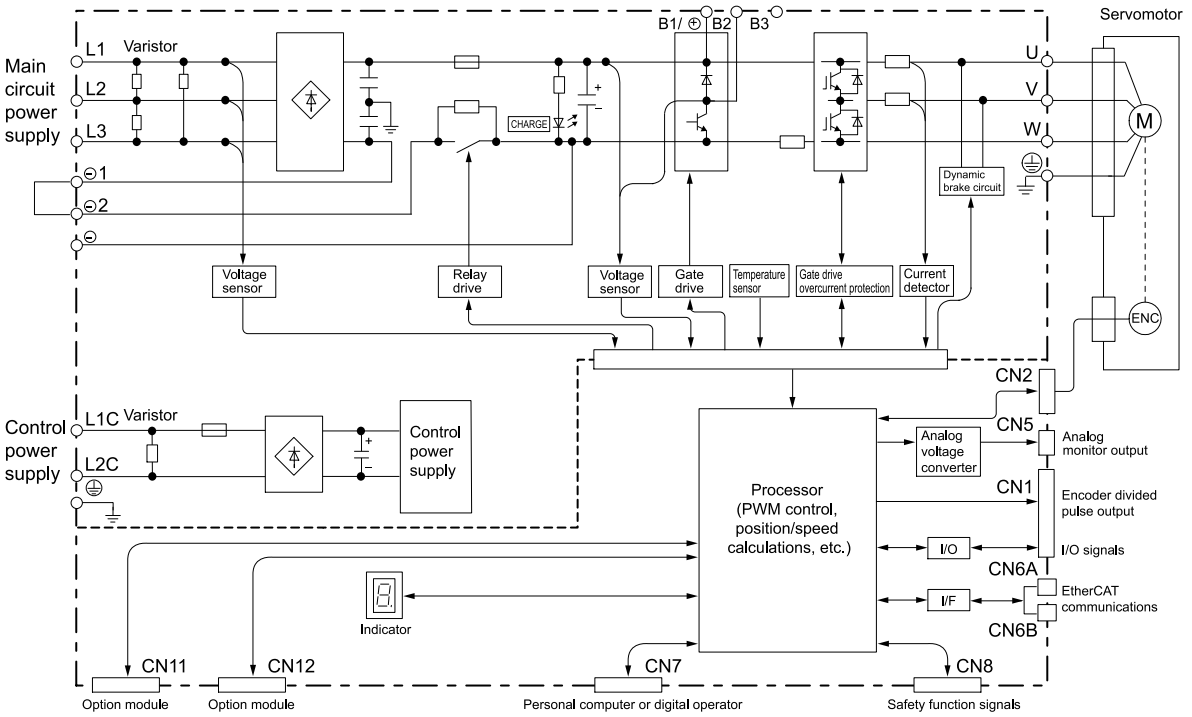

2.2.3 SGDXS-3R8A

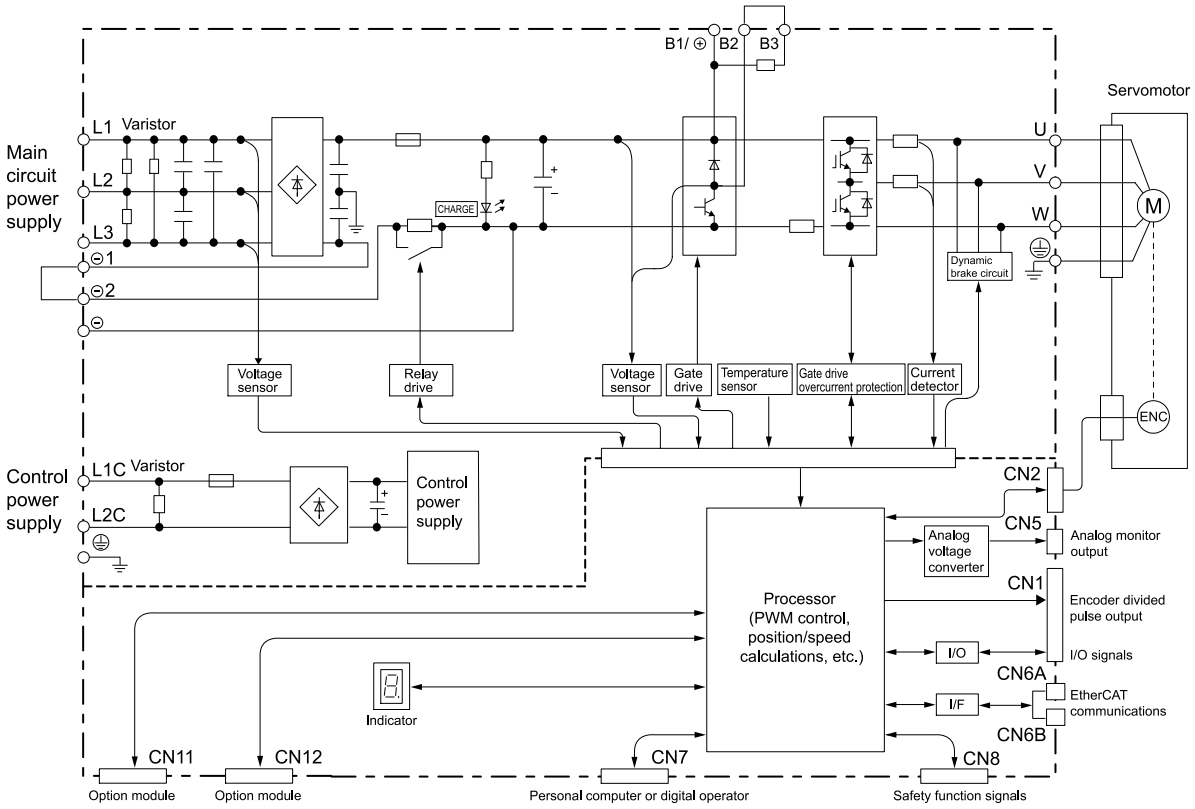

2.2.4 SGDXS-5R5A, -7R6A

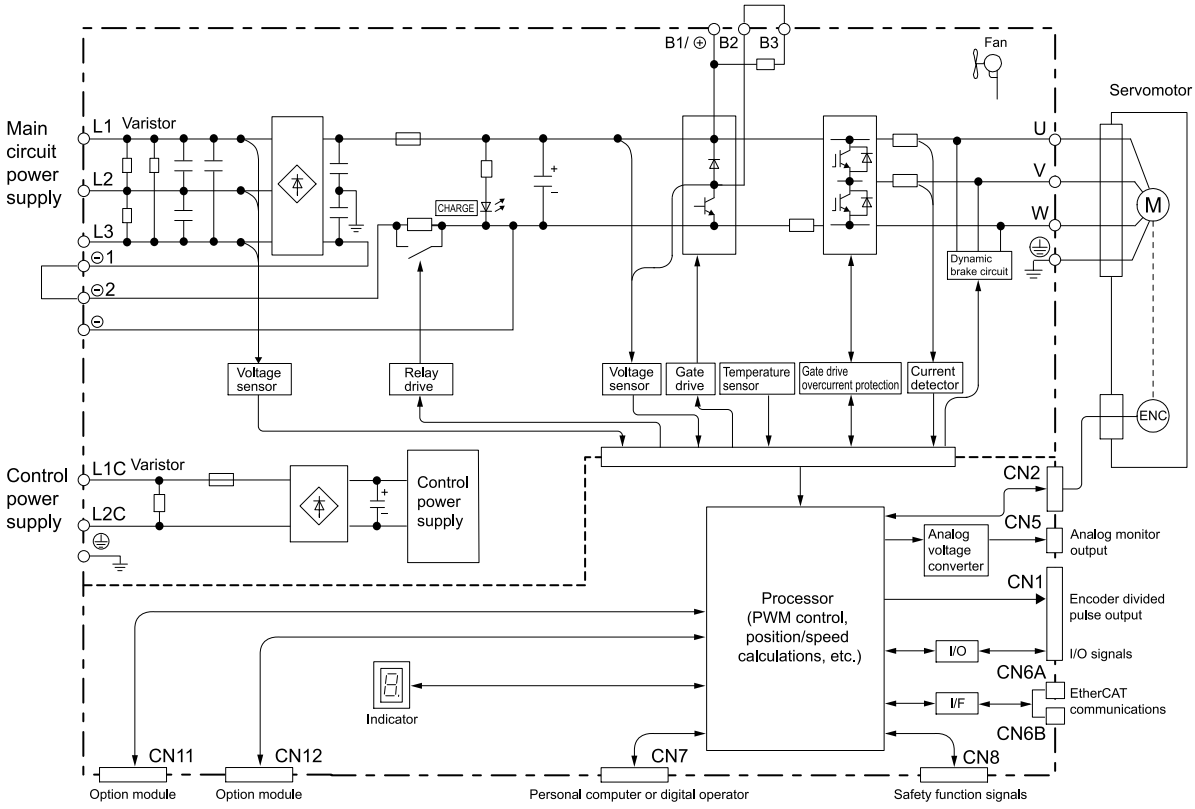

2.2.5 SGDXS-120A

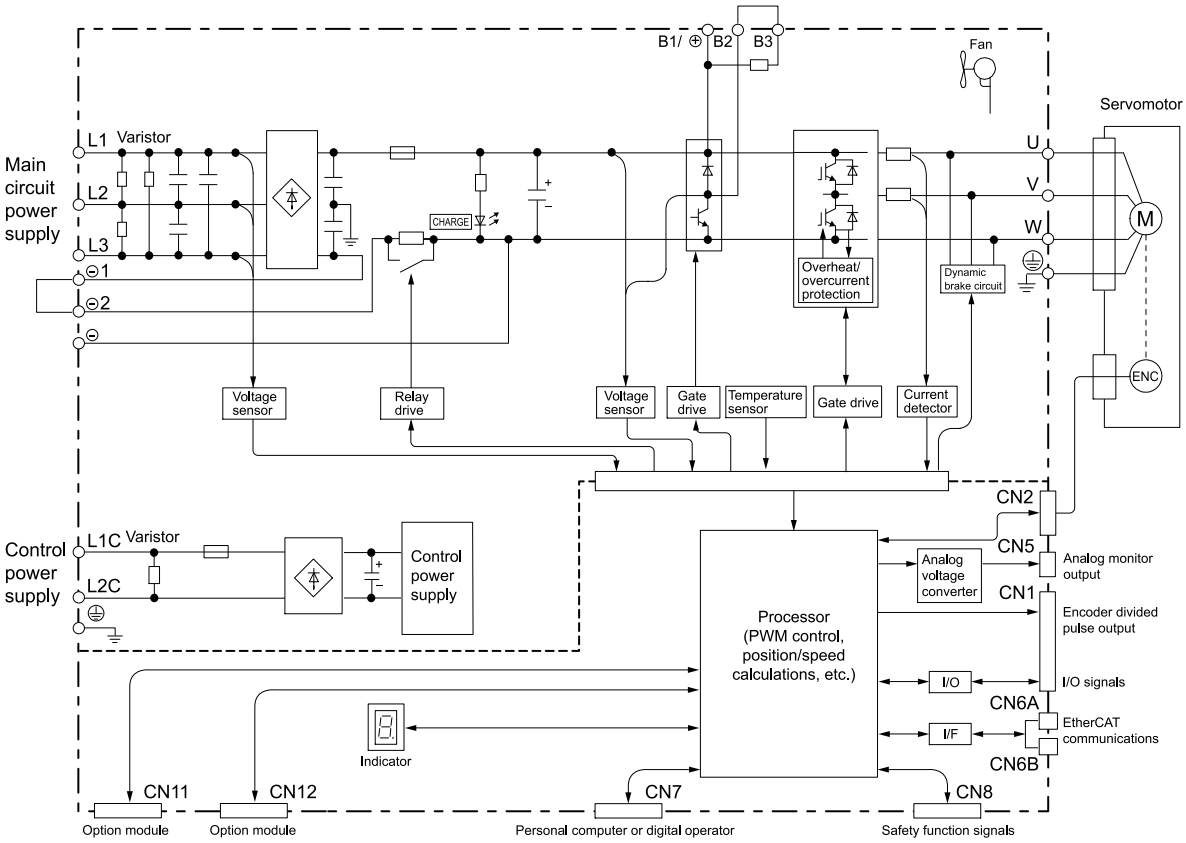

2.2.6 SGDXS-180A, -200A

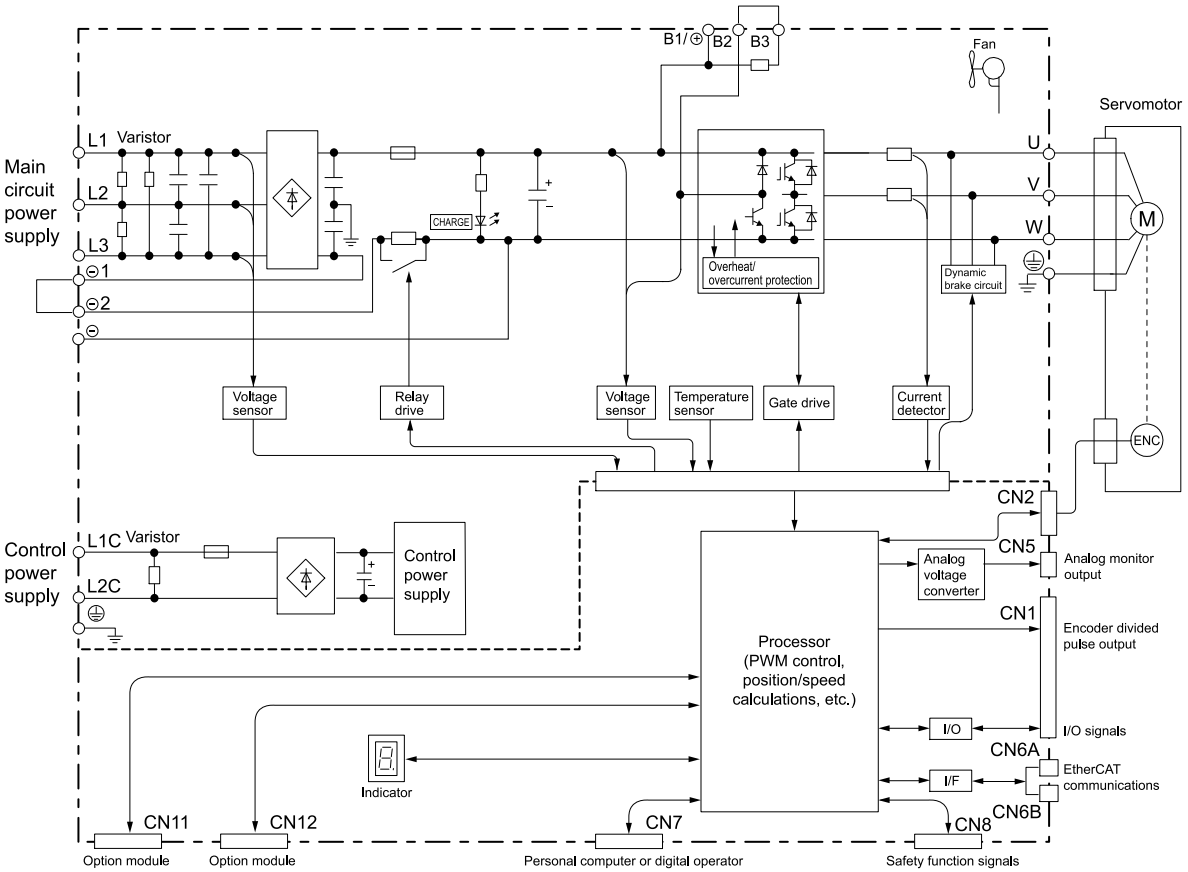

2.2.7 SGDXS-330A

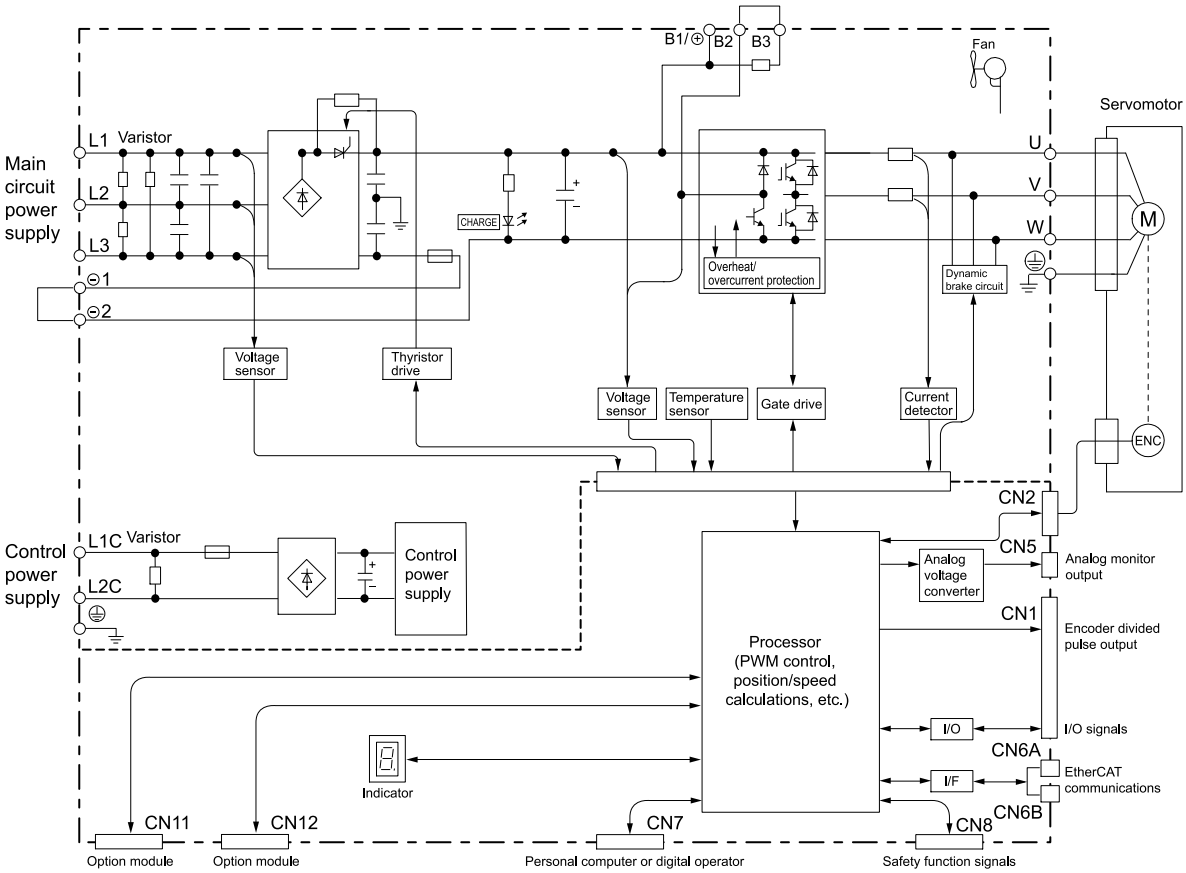

2.2.8 SGDXS-470A, -550A

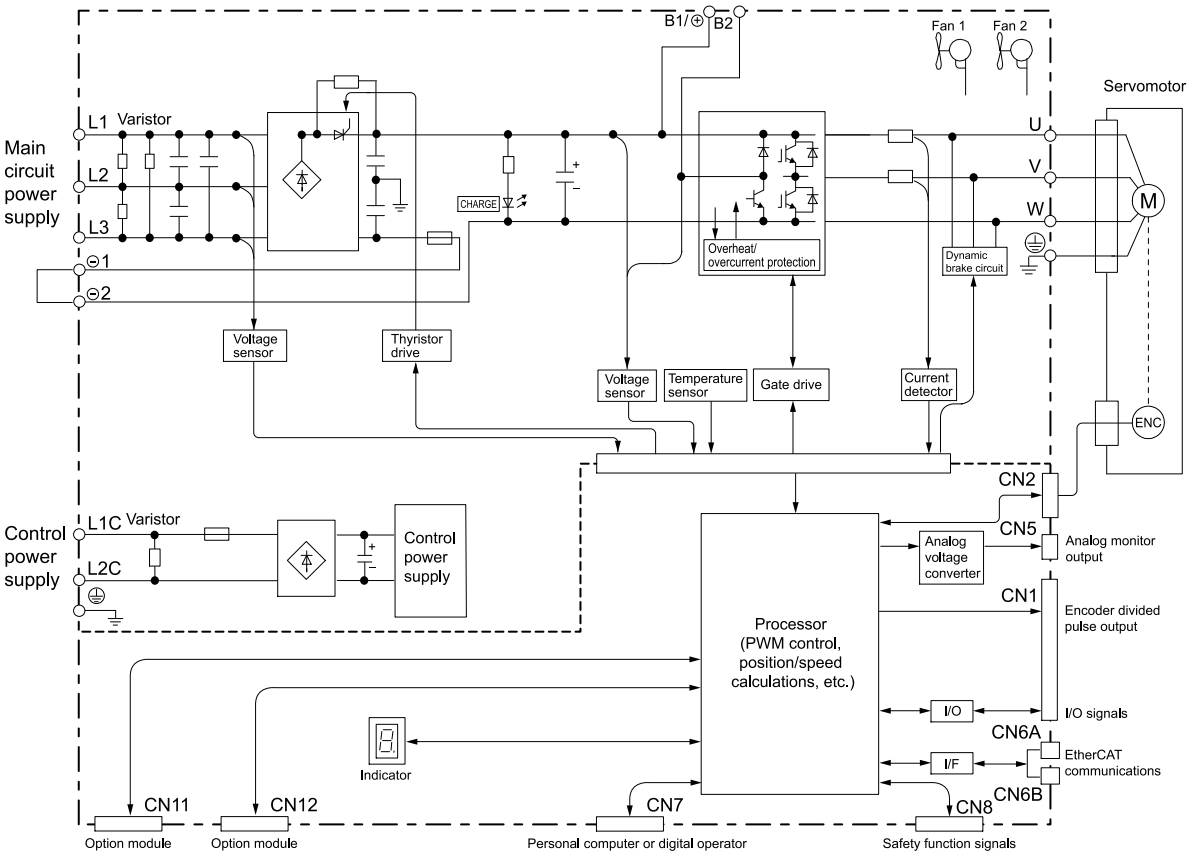

2.2.9 SGDXS-590A, -780A

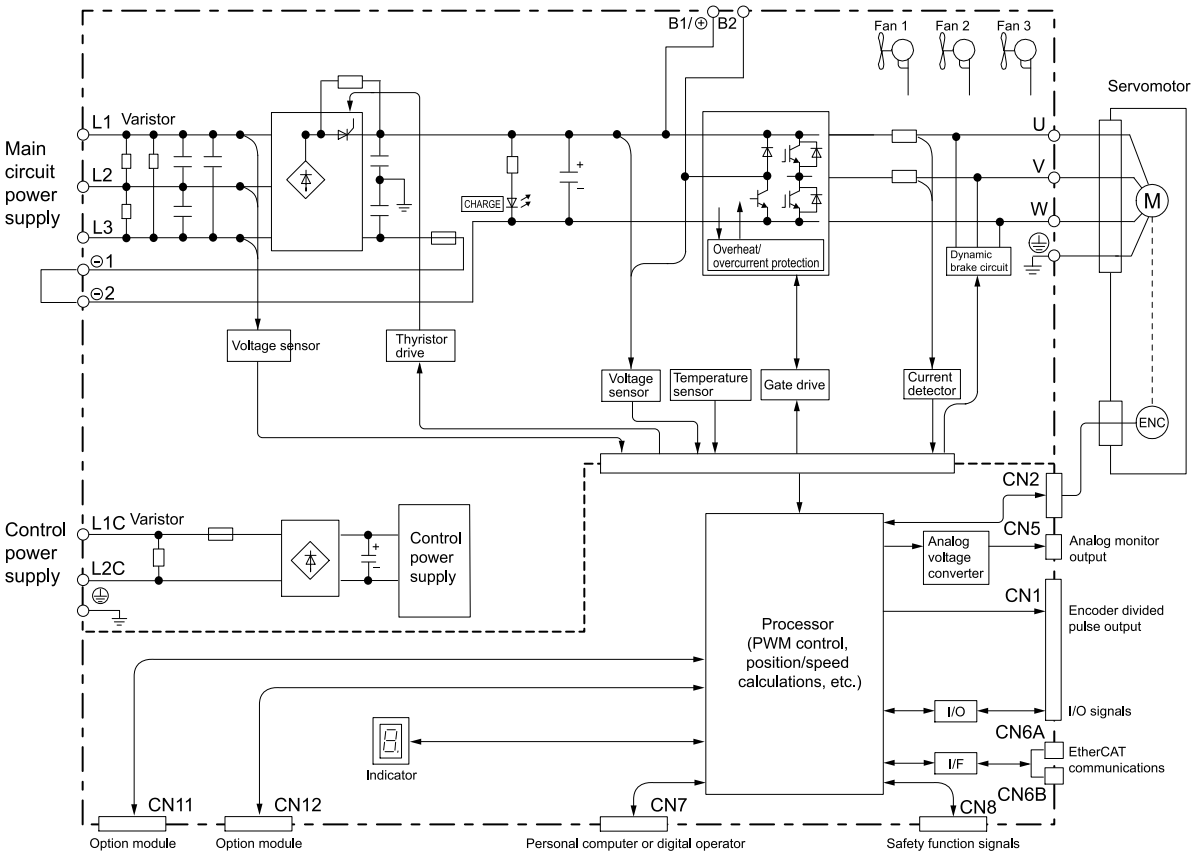

2.2.10 SGDXS-1R9D, -3R5D, -5R4D, -8R4D, -120D, -170D

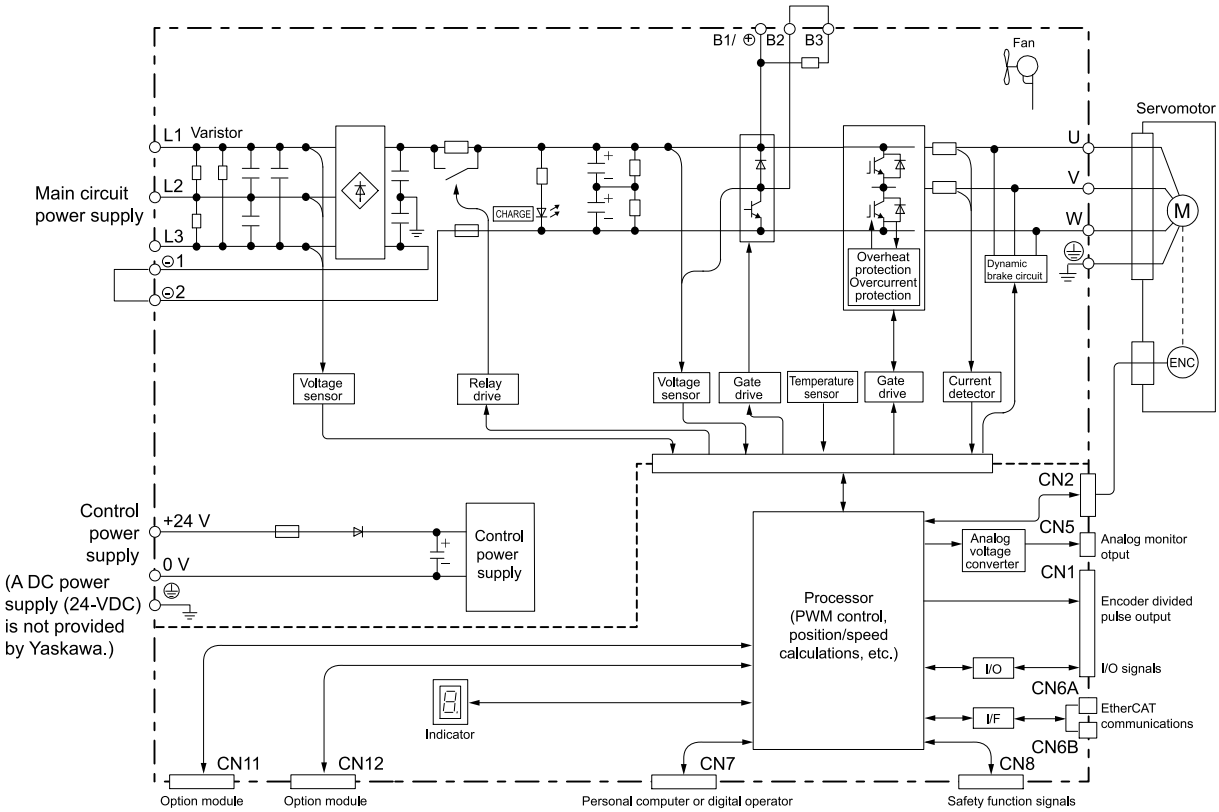

2.2.11 SGDXS-210D, -260D, -280D, -370D

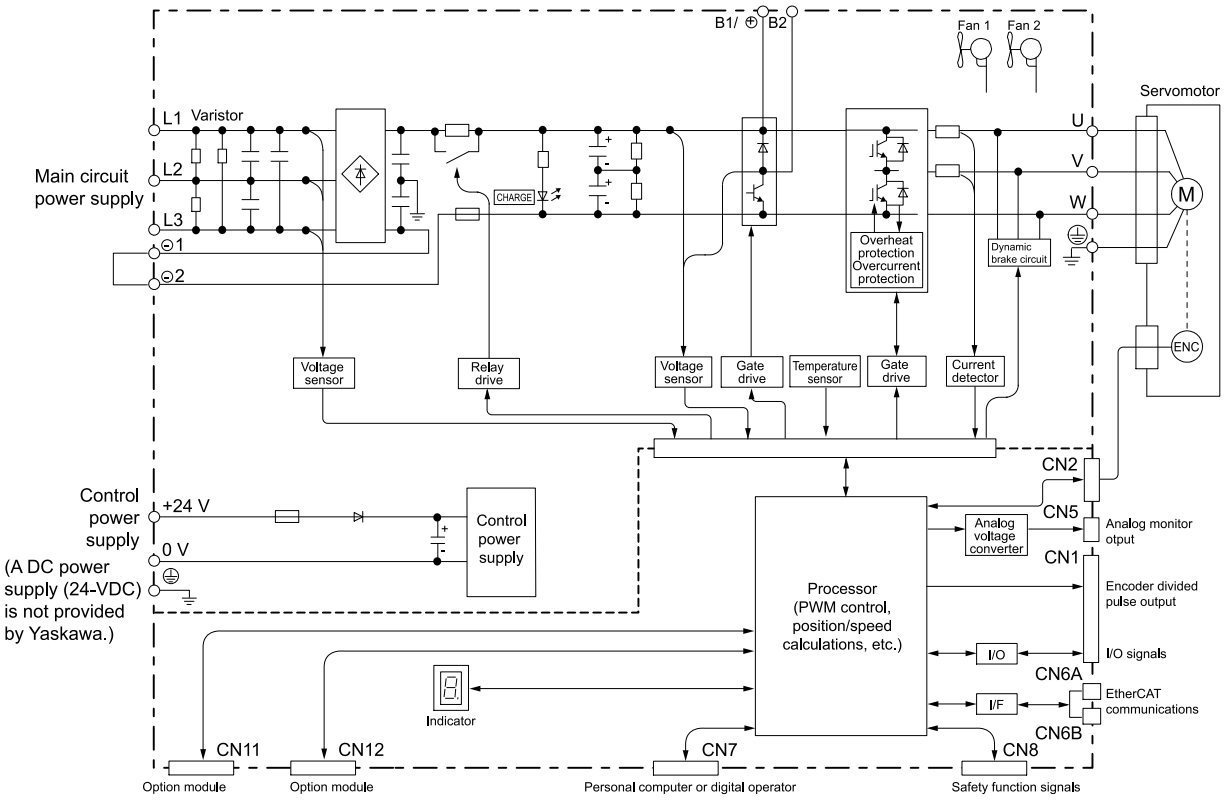

2.3 External Dimensions

2.3.1 Front Cover Dimensions and Connector Specifications

The front cover dimensions and panel connector section are the same for all capacities. Refer to the following figures and table.

(1) Front Cover Dimensions

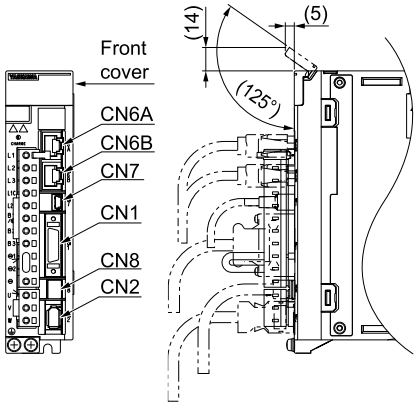

(2) Connector Specifications

Connector No.	Model	Number of Pins	Manufacturer
CN1	10226-59A3MB	26	3M Japan Limited
CN2	53984-0681	6	Molex Japan Co., Ltd.
CN6A/B	3-1734579-4	8	Tyco Electronics Japan G.K.
CN7	2342993-1	5	Tyco Electronics Japan G.K.
CN8	2294415-1	8	Tyco Electronics Japan G.K.

Note:

The above connectors or their equivalents are used for the SERVOPACKs.

2.3.2 SERVOPACK External Dimensions

(1) Base-mounted SERVOPACKs

(a) SGDXS-R70A, -R90A, -1R6A

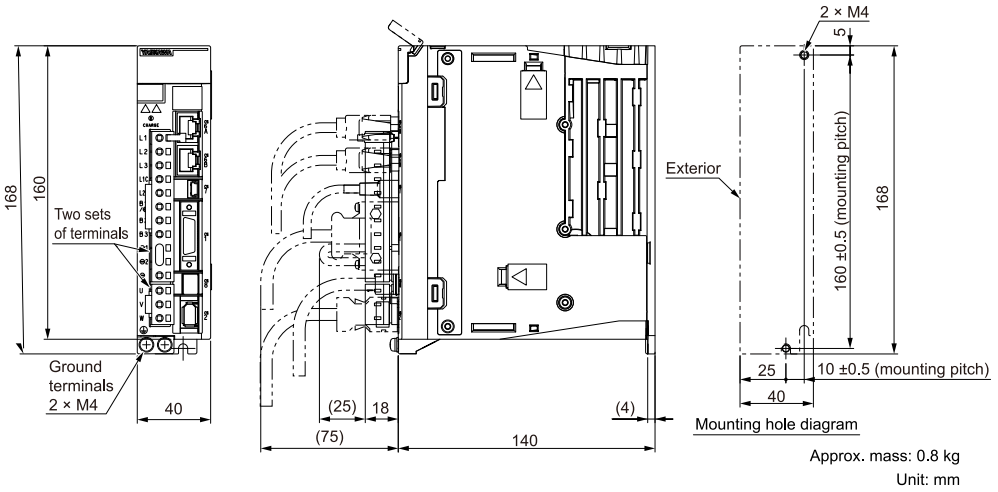

(b) SGDXS-2R8A

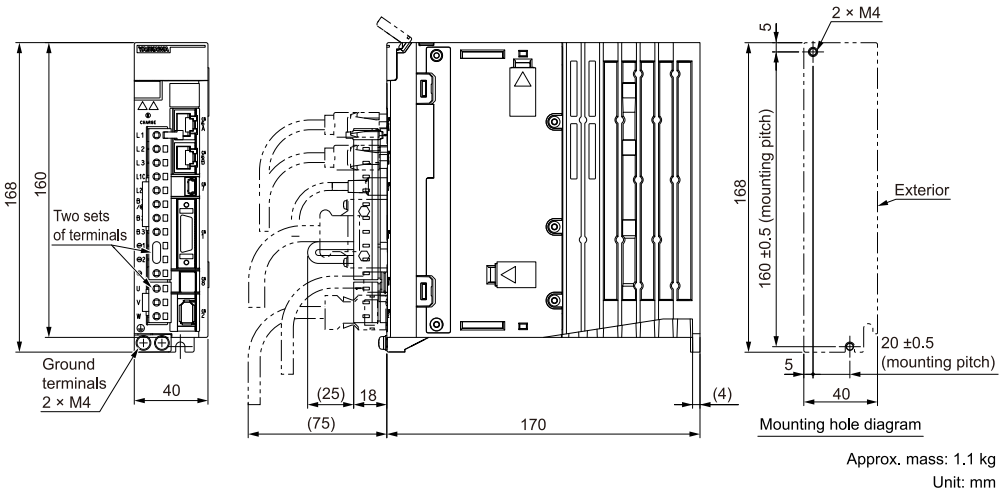

(c) SGDXS-3R8A

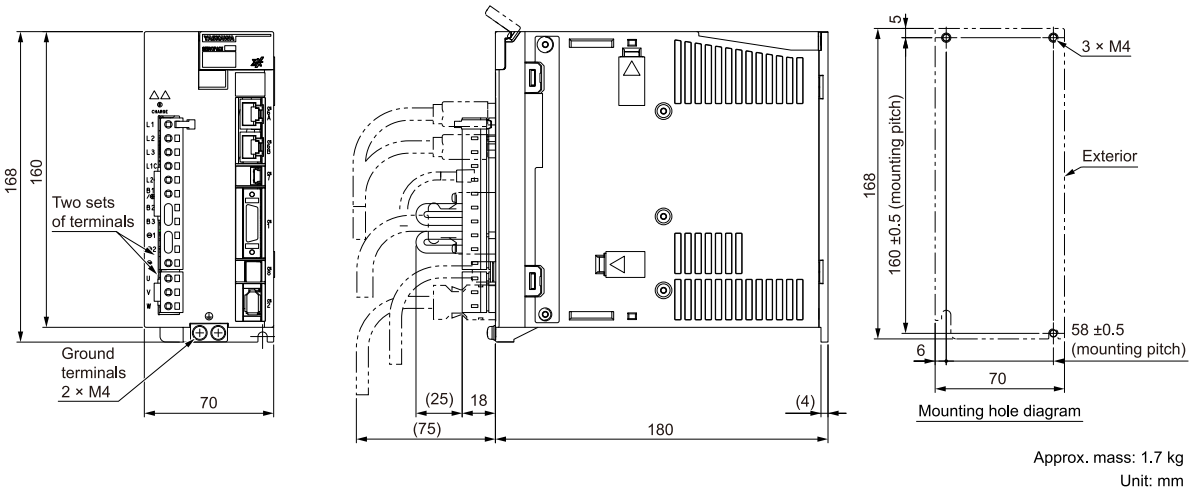

(d) SGDXS-5R5A, -7R6A

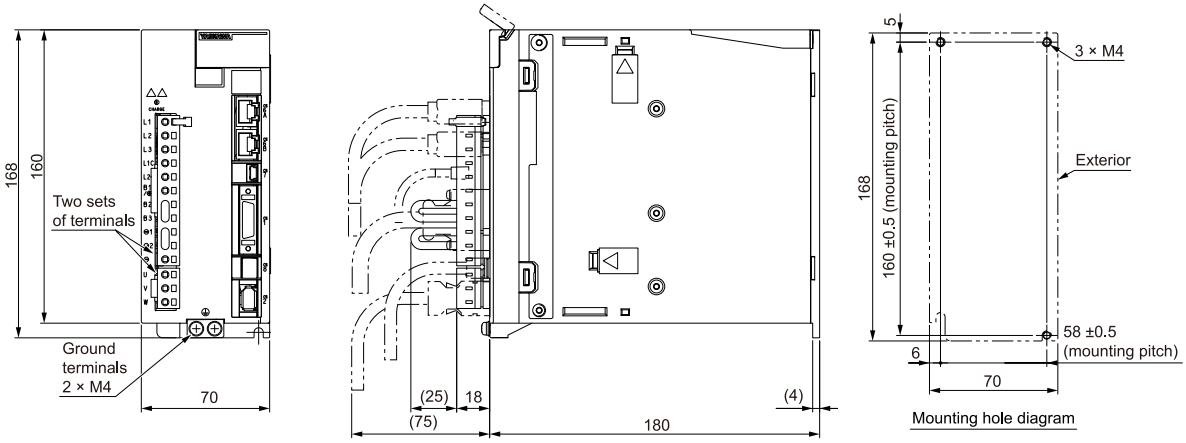

Approx. mass: 1.6 kg
Unit: mm

(e) SGDXS-120A

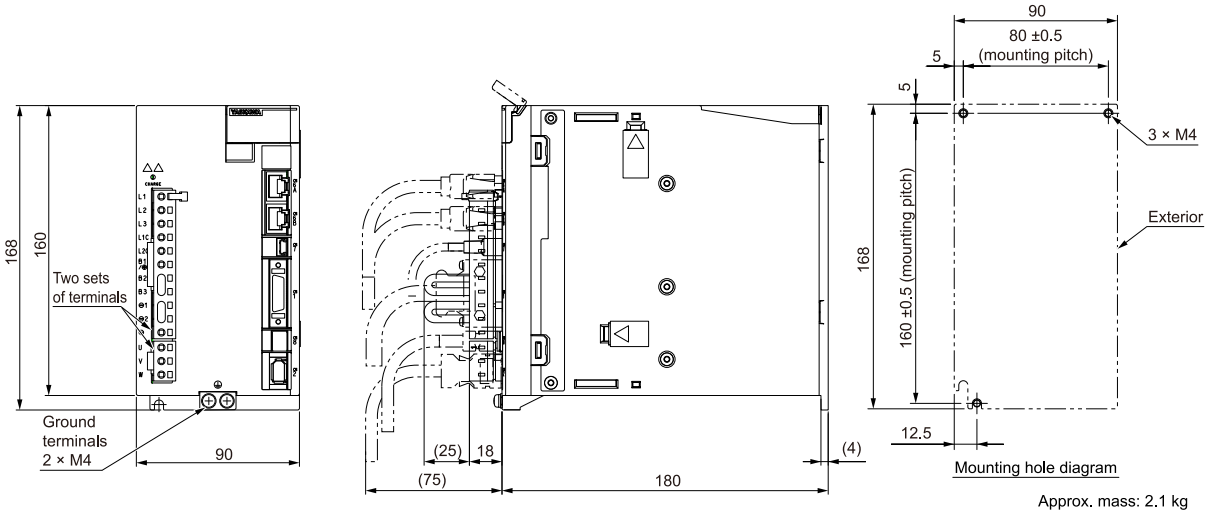

Approx. mass: 2.1 kg
Unit: mm

(f) SGDXS-180A, -200A

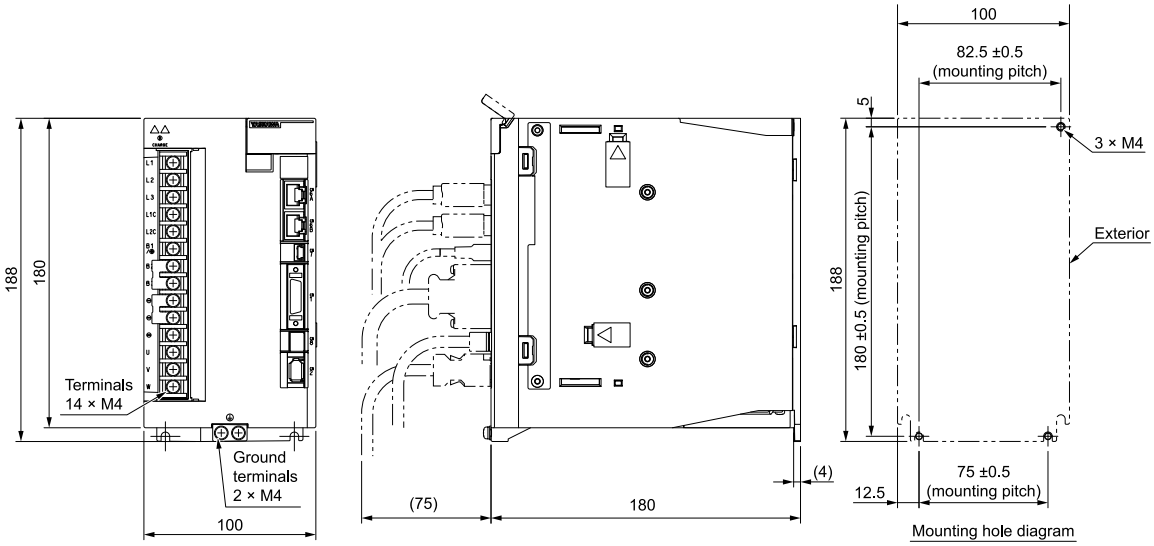

Approx. mass: 2.8 kg
Unit: mm

Note:

These drawings show the SERVOPACK with the terminal cover removed.

(g) SGDXS-330A

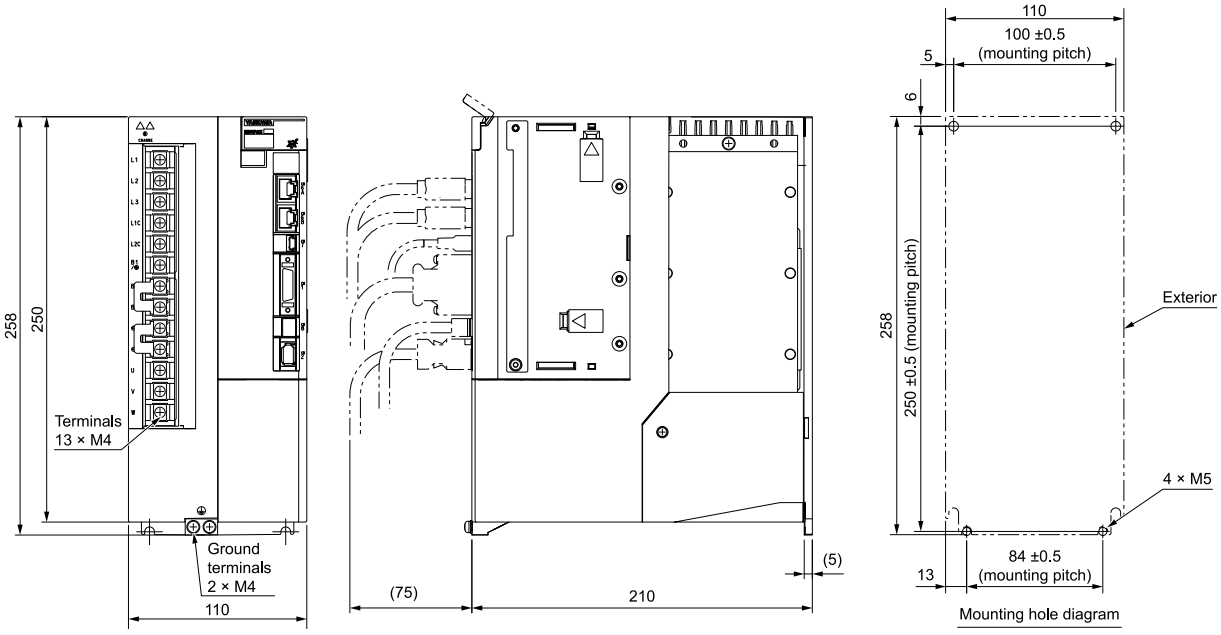

Approx. mass: 4.4 kg
Unit: mm

Note:

These drawings show the SERVOPACK with the terminal cover removed.

(h) SGDXS-470A, -550A

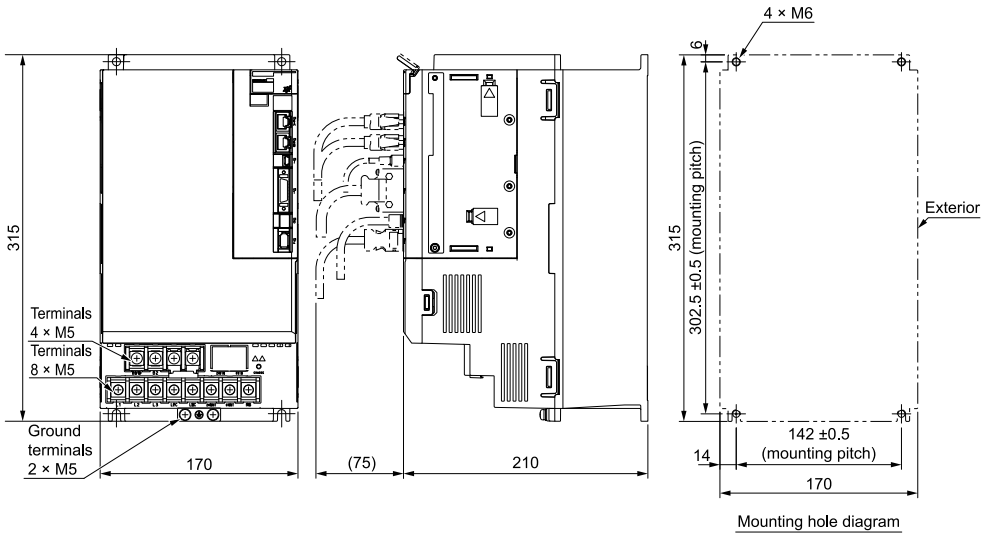

Approx. mass: 9.0 kg
Unit: mm

(i) SGDXS-590A, -780A

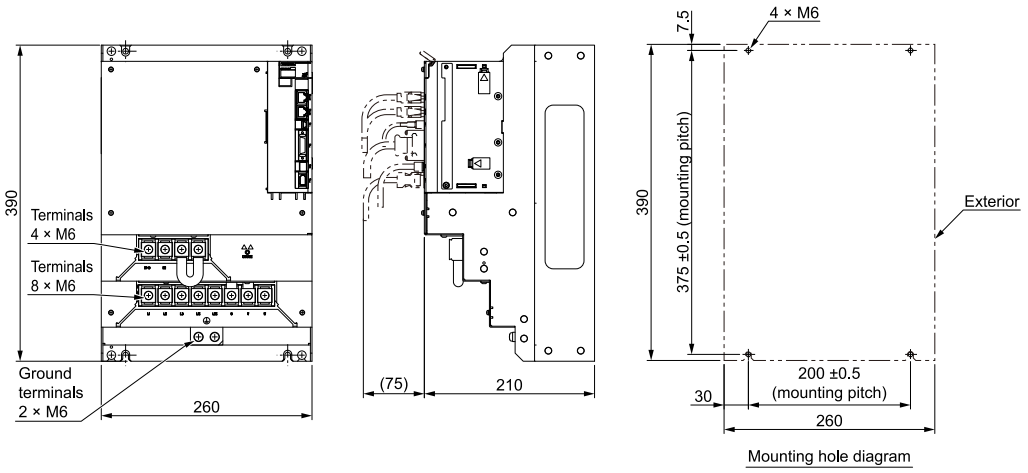

Approx. mass: 16 kg
Unit: mm

(j) SGDXS-1R9D, -3R5D, -5R4D

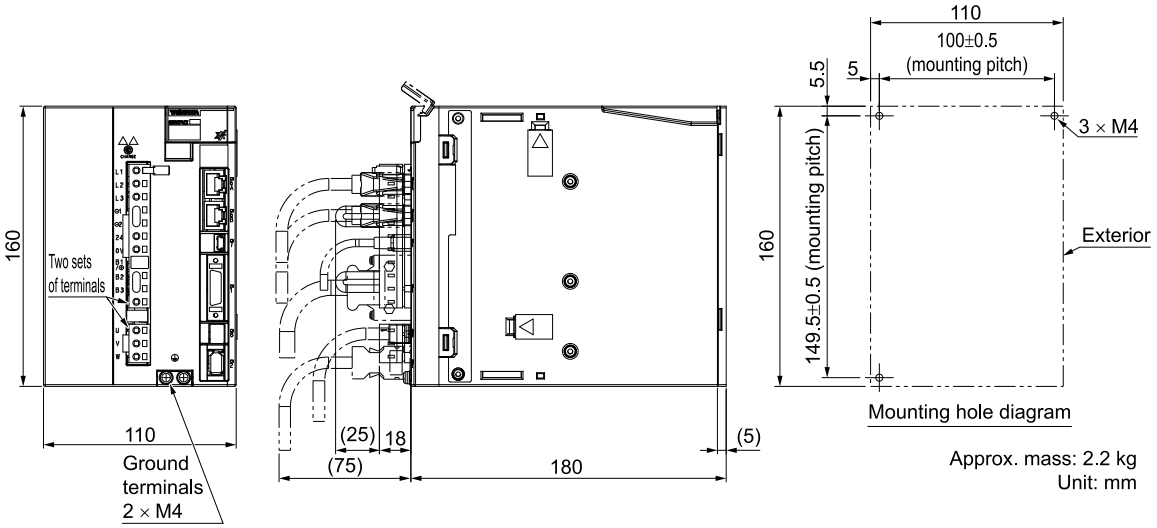

Approx. mass: 2.2 kg
Unit: mm

(k) SGDXS-8R4D, -120D, -170D

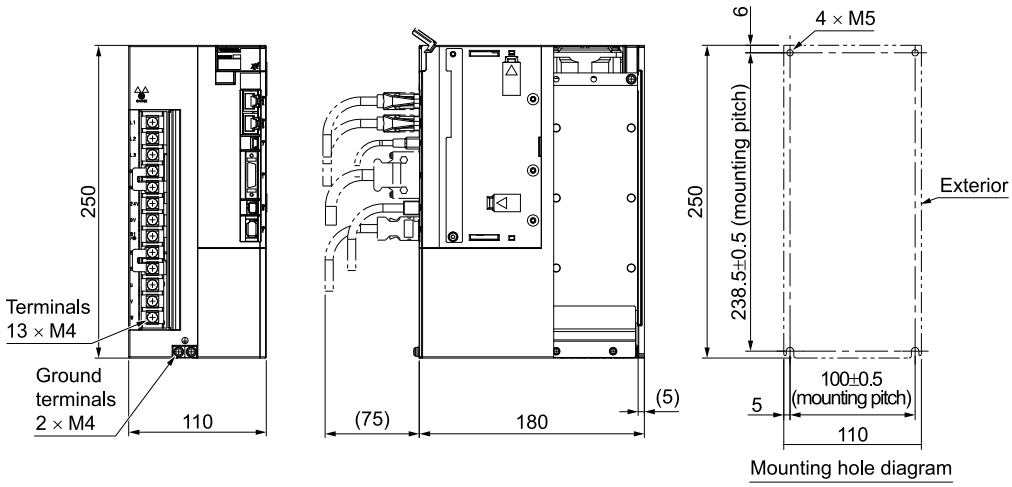

Approx. mass: 4.2 kg
Unit: mm

(l) SGDXS-210D, -260D, -280D, -370D

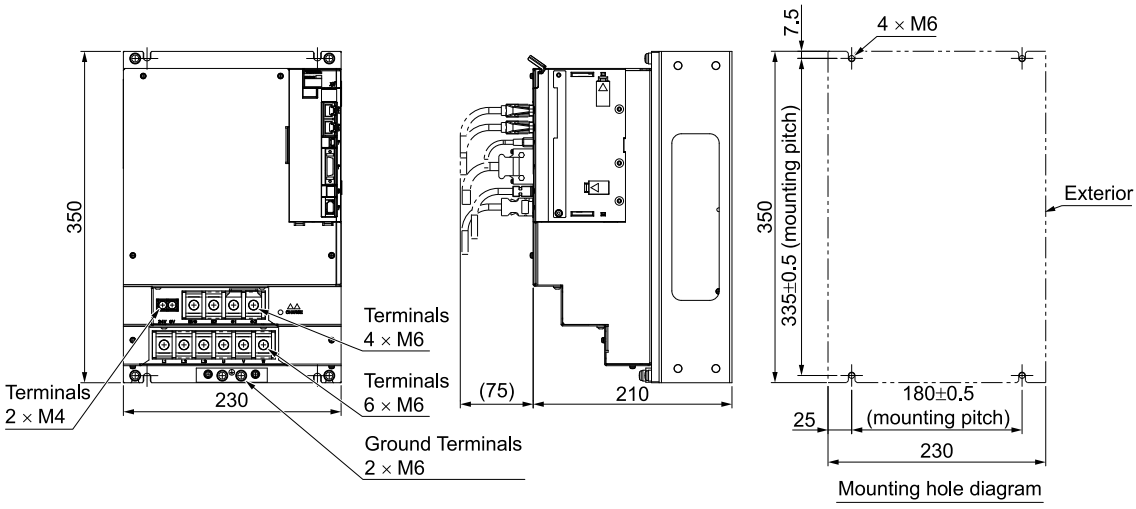

Approx. mass: 12 kg
Unit: mm

(2) Rack-mounted SERVOPACKs

Hardware Option Code: 0001

(a) SGDXS-R70A, -R90A, -1R6A

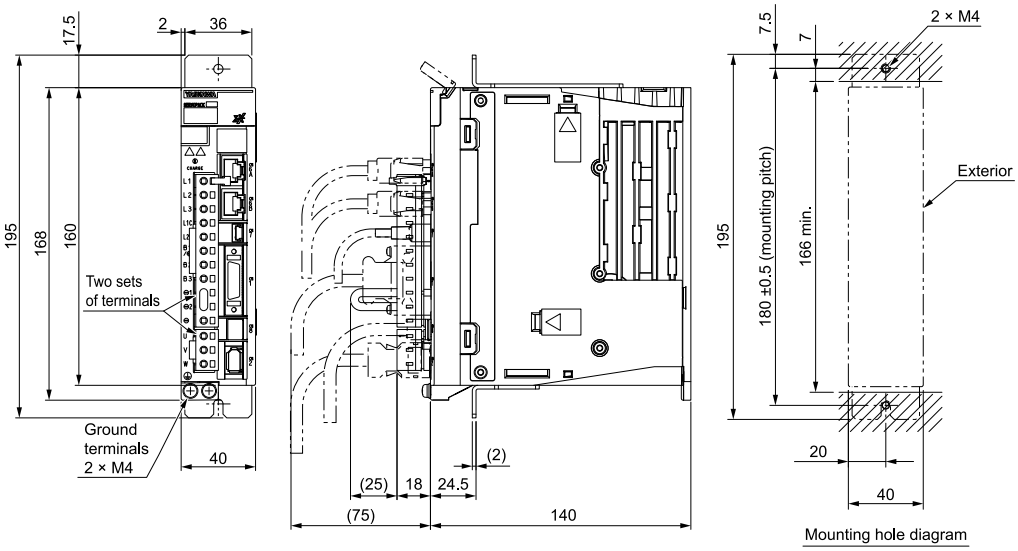

Approx. mass: 0.9 kg
Unit: mm

(b) SGDXS-2R8A

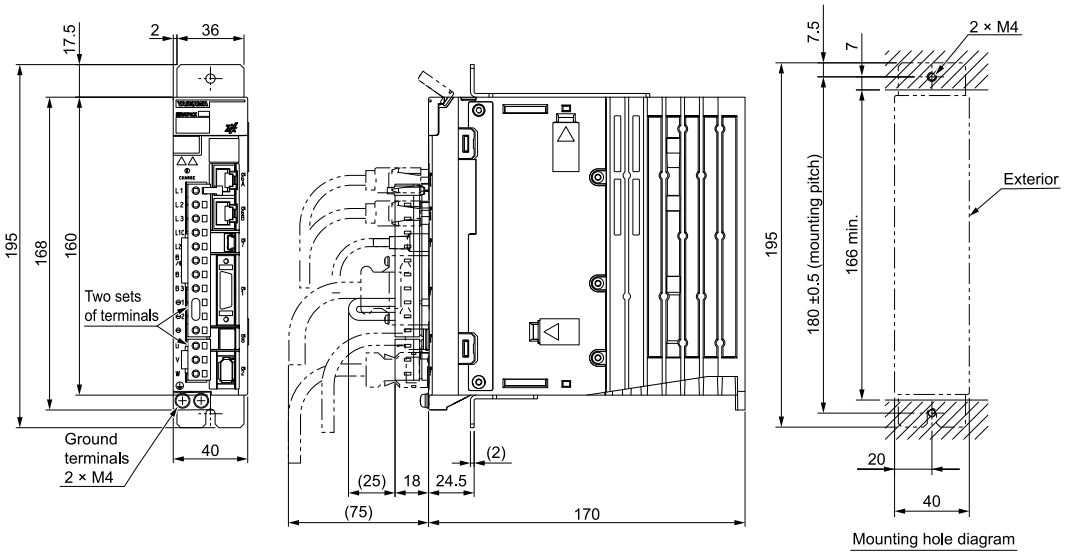

Approx. mass: 1.1 kg
Unit: mm

(c) SGDXS-3R8A

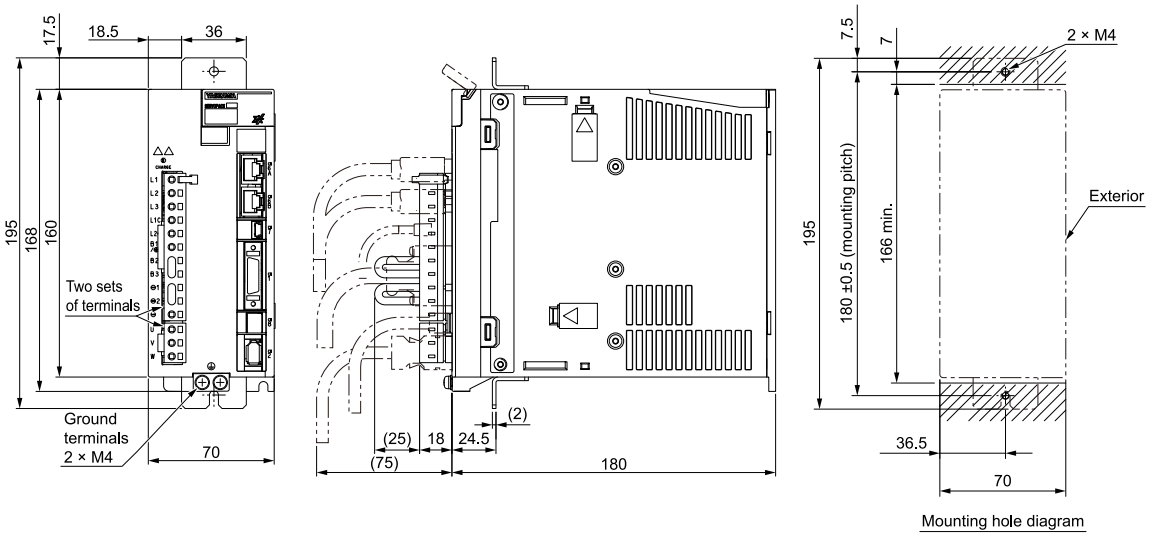

Approx. mass: 1.7 kg
Unit: mm

(d) SGDXS-5R5A, -7R6A

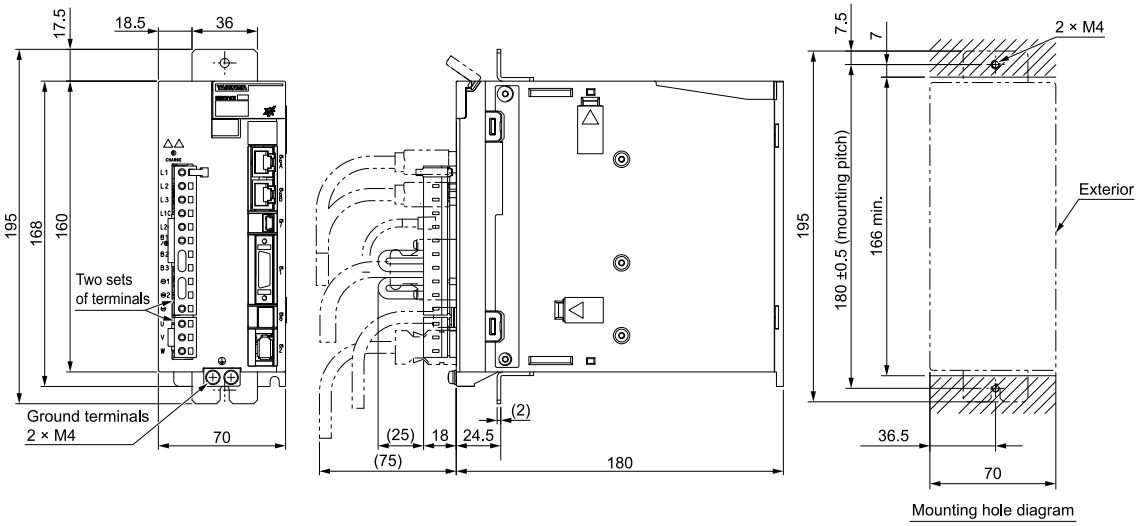

Approx. mass: 1.7 kg
Unit: mm

(e) SGDXS-120A

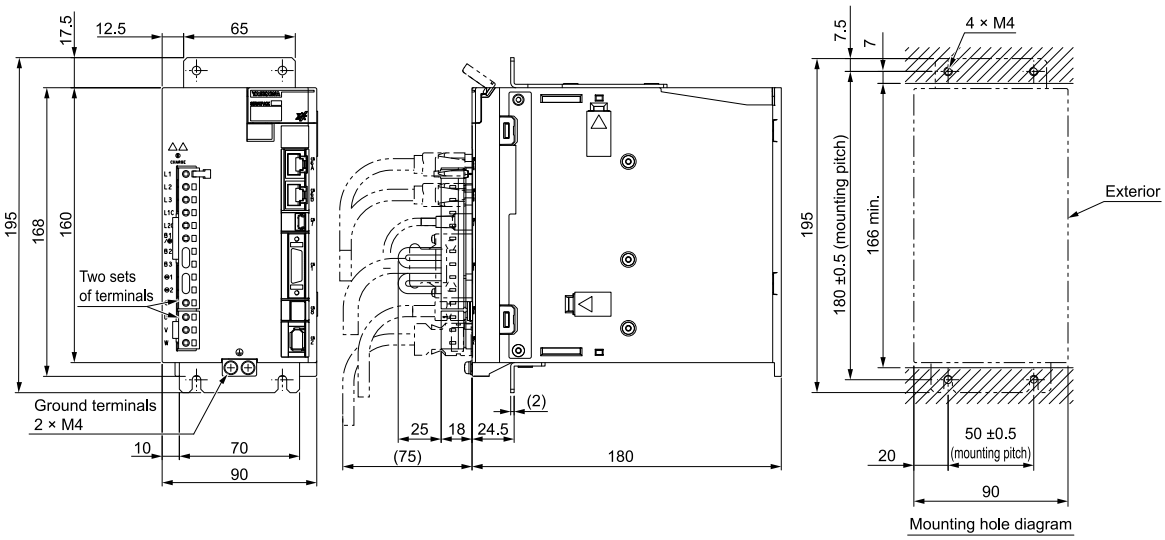

Approx. mass: 2.2 kg
Unit: mm

(f) SGDXS-180A, -200A

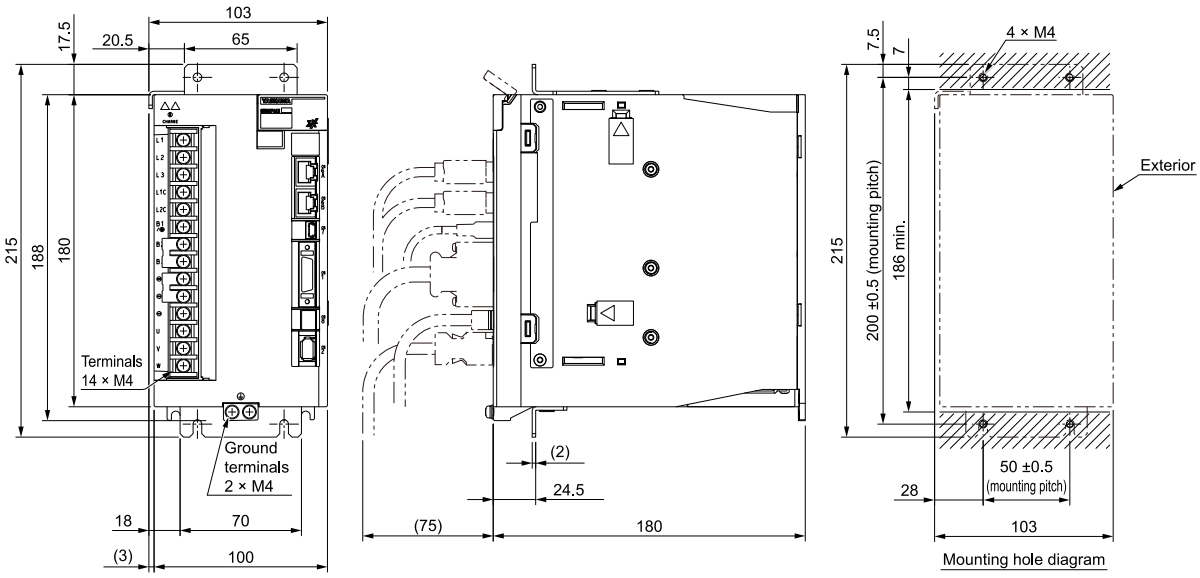

Approx. mass: 2.9 kg
Unit: mm

Note:

These drawings show the SERVOPACK with the terminal cover removed.

(g) SGDXS-330A

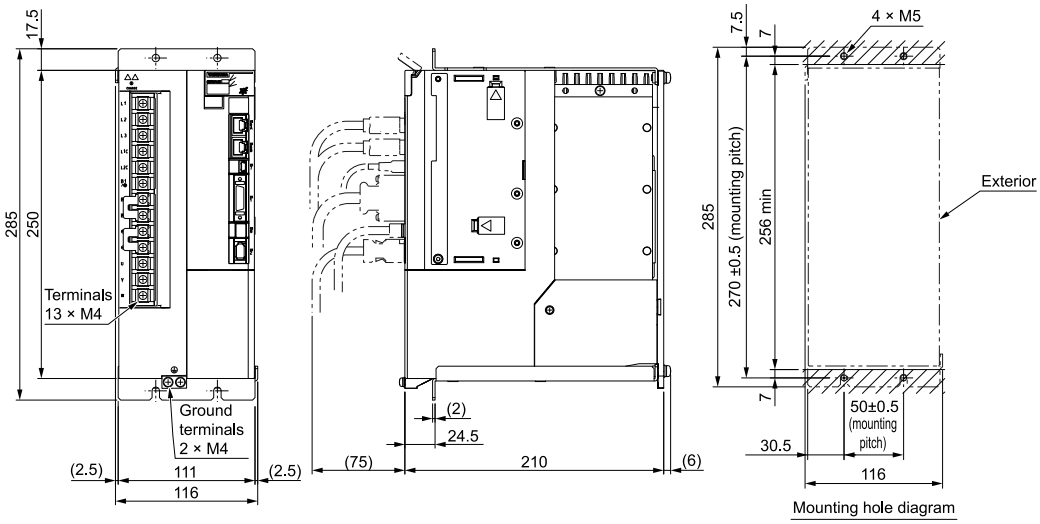

Approx. mass: 4.9 kg
Unit: mm

Note:

These drawings show the SERVOPACK with the terminal cover removed.

(h) SGDXS-1R9D, -3R5D, -5R4D

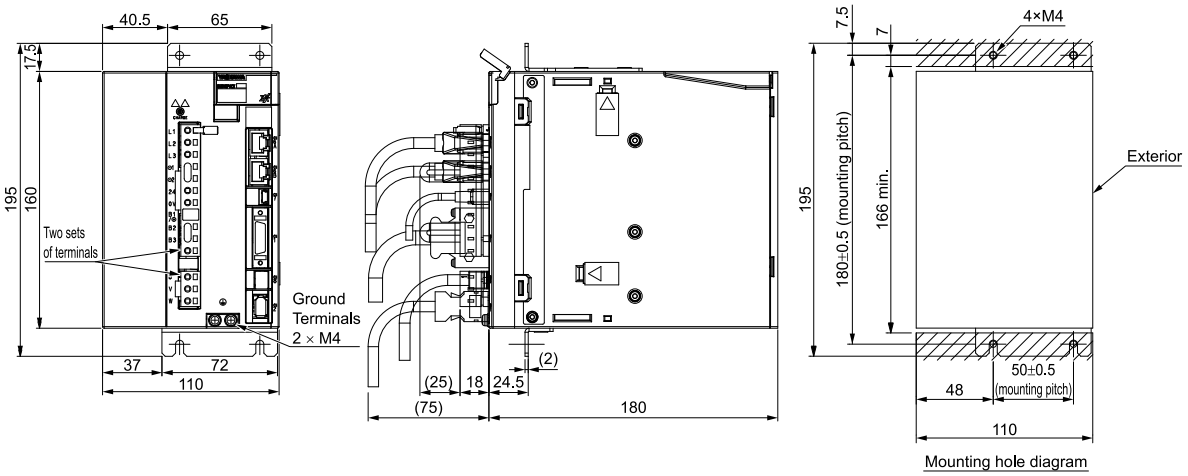

Approx. mass: 2.3 kg
Unit: mm

(i) SGDXS-8R4D, -120D, -170D

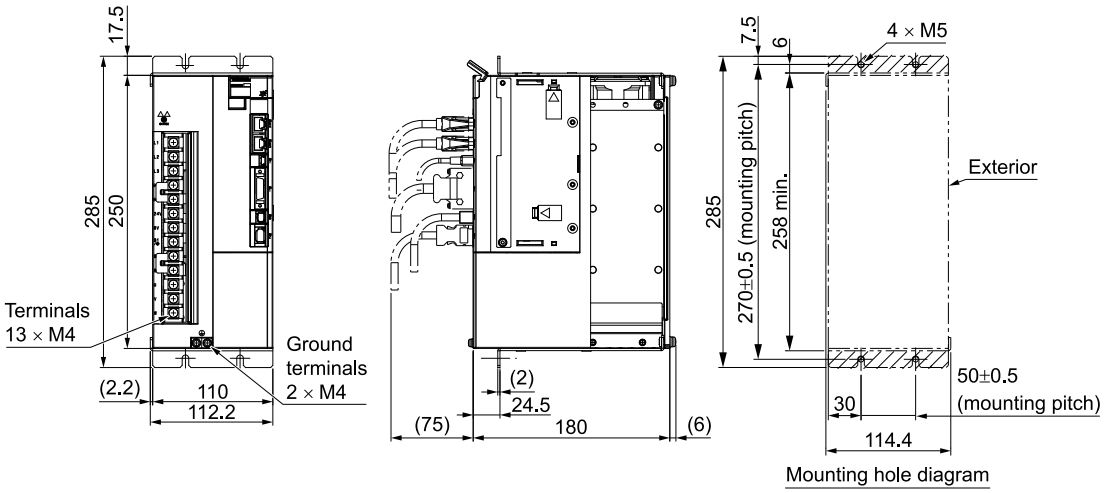

Approx. mass: 4.6 kg
Unit: mm

(3) Duct-ventilated SERVOPACKs

Hardware Option Code: 0001

(a) SGDXS-470A, -550A

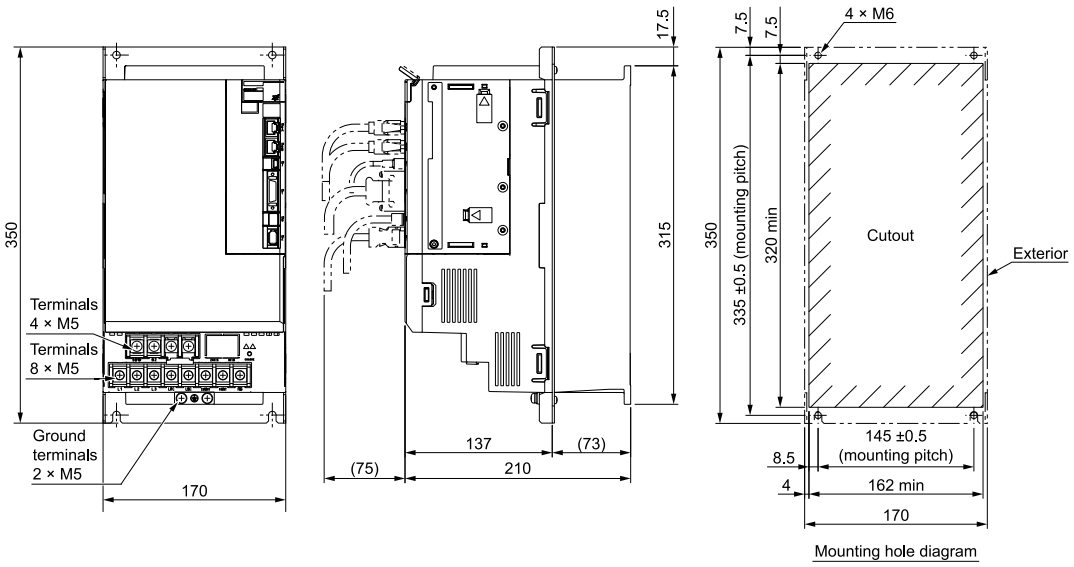

Approx. mass: 9.0 kg
Unit: mm

(b) SGDXS-590A, -780A

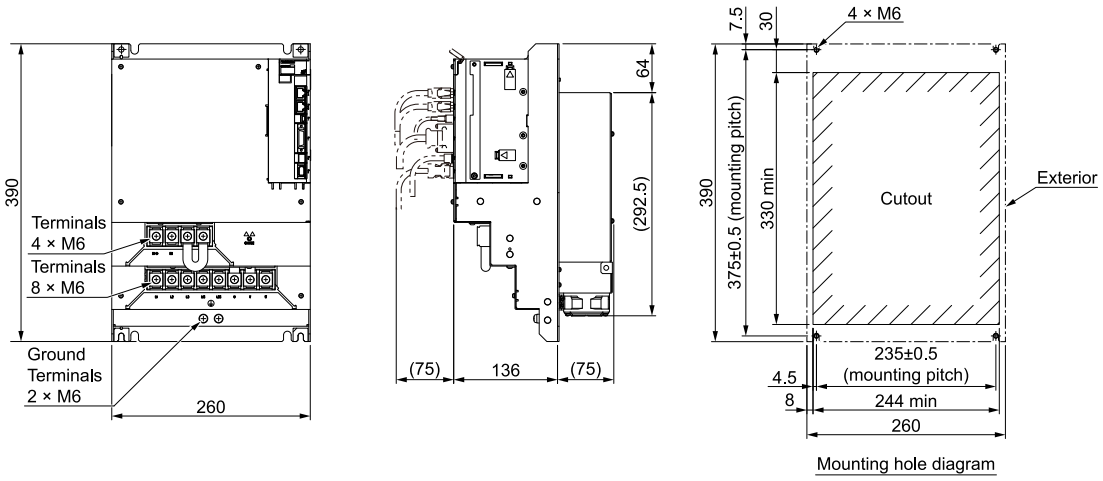

Approx. mass: 15 kg
Unit: mm

(c) SGDXS-210D, -260D, -280D, -370D

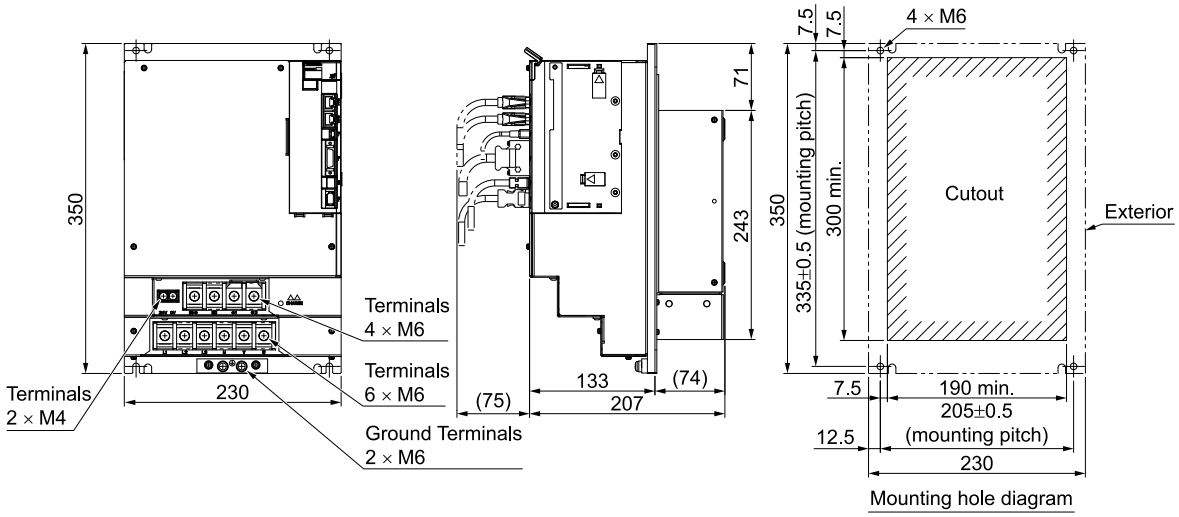

Approx. mass: 10 kg
Unit: mm

2.4 Examples of Standard Connections between SERVOPACKs and Peripheral Devices

2.4.1 Rotary Servomotor

(1) SGDXS-□□□A

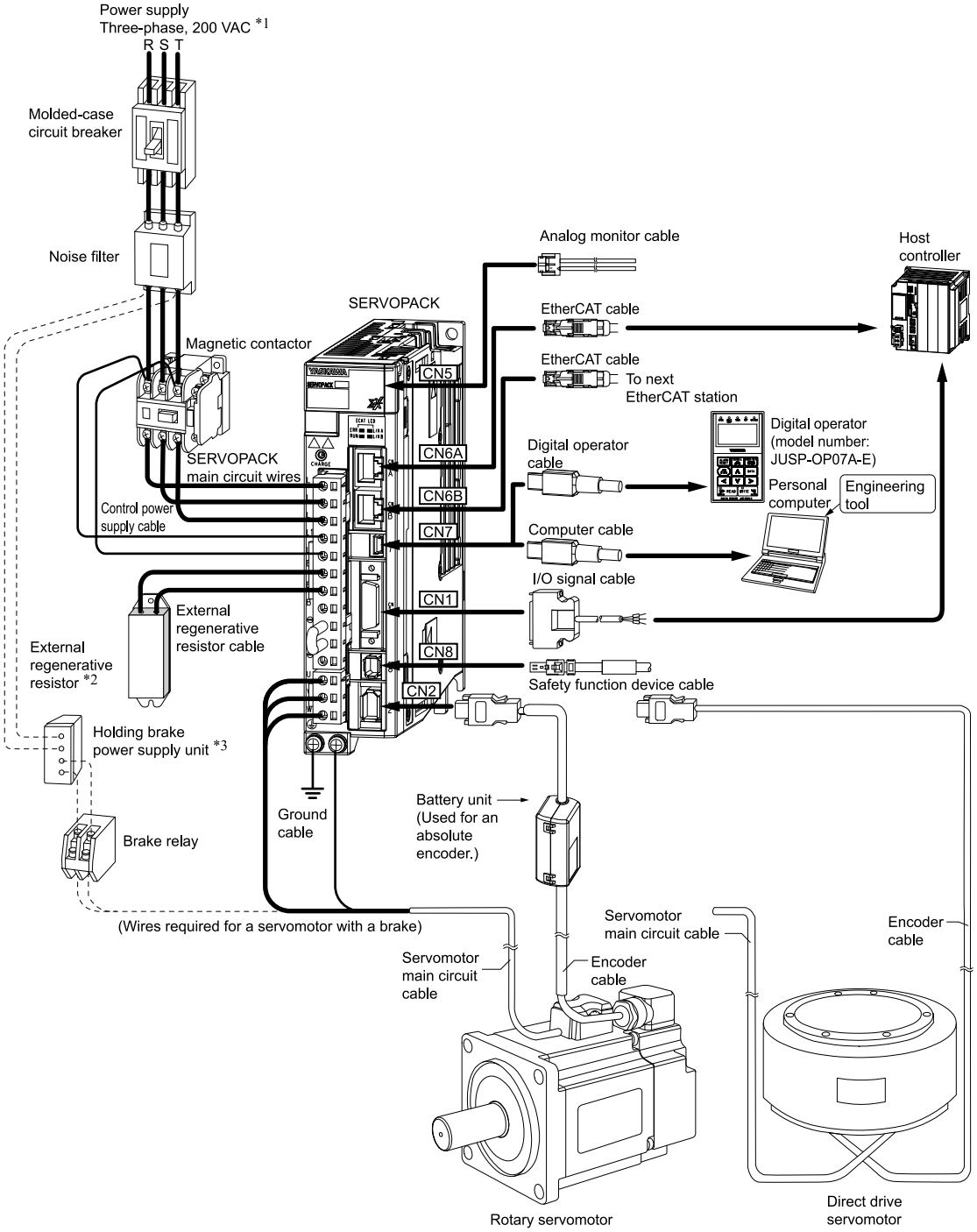

*1 This example is for a SERVOPACK with a three-phase, 200-VAC power supply input. The pin layout of the main circuit connector depends on the voltage.

*2 External regenerative resistors are not provided by Yaskawa.

*3 The power supply for the holding brake is not provided by Yaskawa. Select a power supply based on the holding brake specifications. If you use a 24-V brake, install a separate power supply for the 24-VDC power supply from other power supplies, such as the one for the I/O signals of the CN1 connector. If the power supply is shared, the I/O signals may malfunction.

(2) SGDXS-□□□D

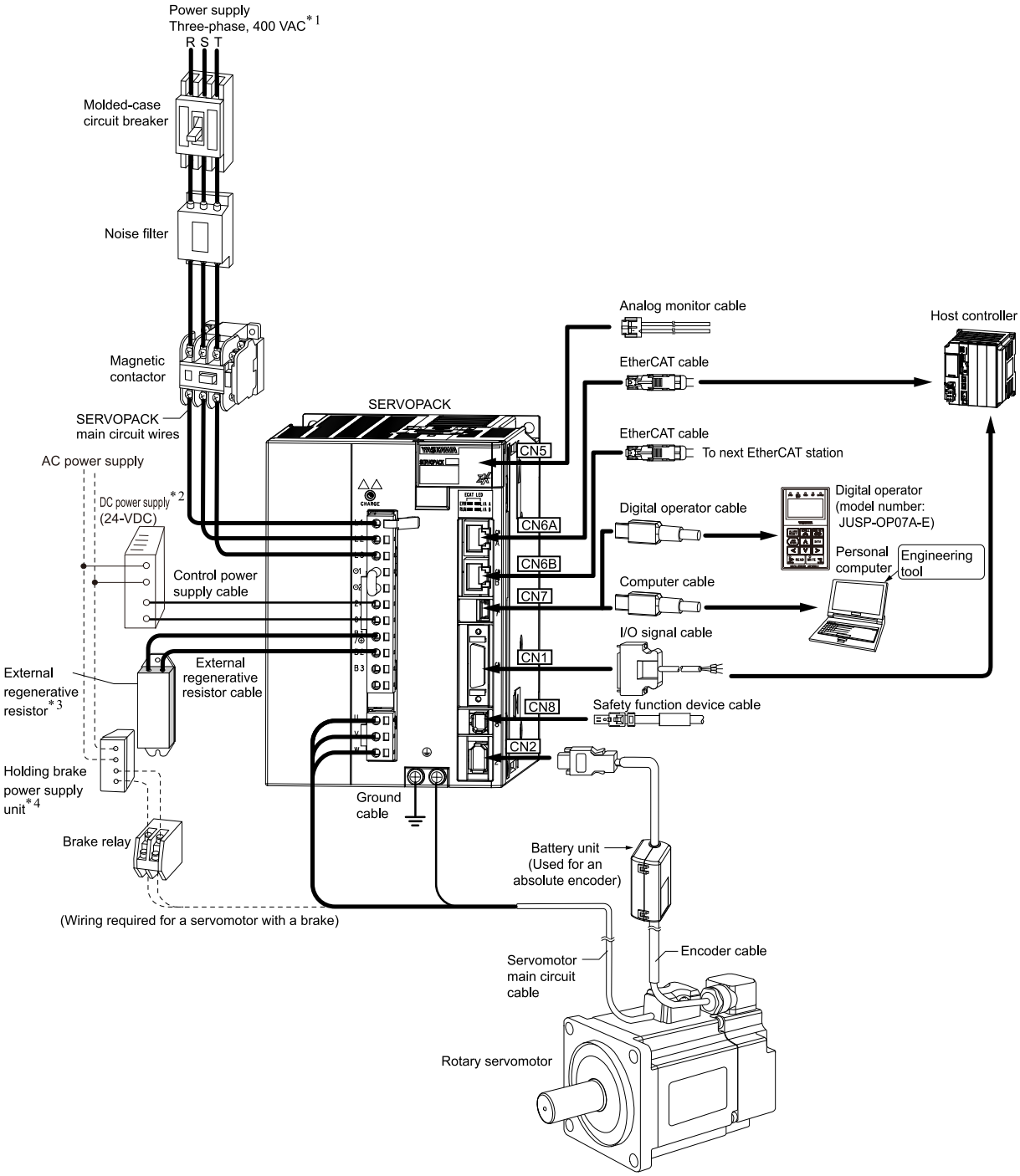

*1 This example is for a SERVOPACK with a three-phase, 400-VAC power supply input. The pin layout of the main circuit connector depends on the voltage.

*2 A DC power supply (24-VDC) is not provided by Yaskawa. Use a DC power supply (24-VDC) with double insulation or reinforced insulation. Do not use this power supply as the DC power supply (24-VDC) for the brake.

*3 External regenerative resistors are not provided by Yaskawa.

*4 The power supply for the holding brake is not provided by Yaskawa. Select a power supply based on the holding brake specifications. If you use a 24-V brake, install a separate power supply for the 24-VDC power supply from other power supplies, such as the one for the I/O signals of the CN1 connector. If the power supply is shared, the I/O signals may malfunction.

2.4.2 Linear Servomotor

(1) SGDXS-□□□A

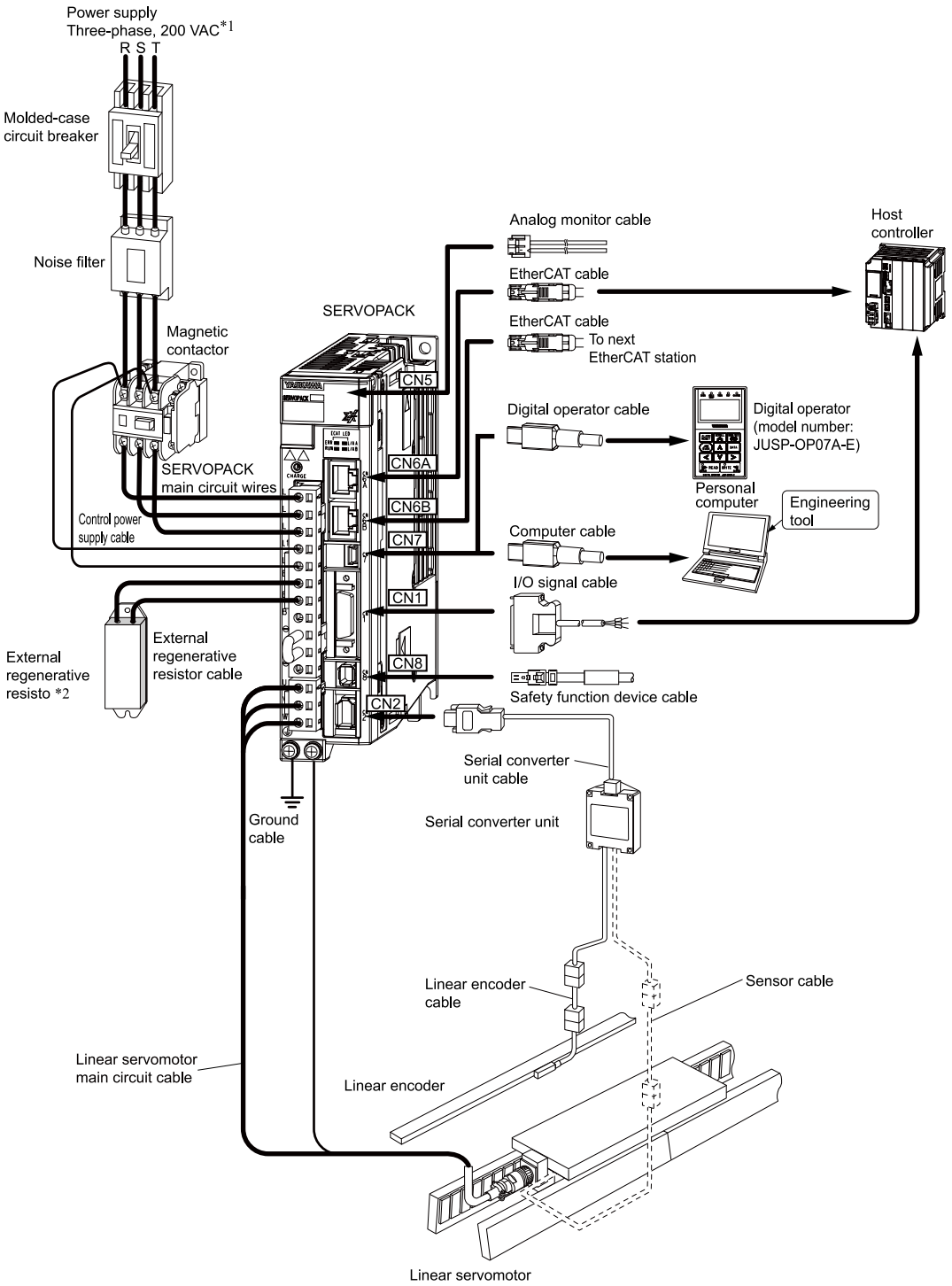

*1 This example is for a SERVOPACK with a three-phase, 200-VAC power supply input. The pin layout of the main circuit connector depends on the voltage.

*2 External regenerative resistors are not provided by Yaskawa.

(2) SGDXS-□□□D

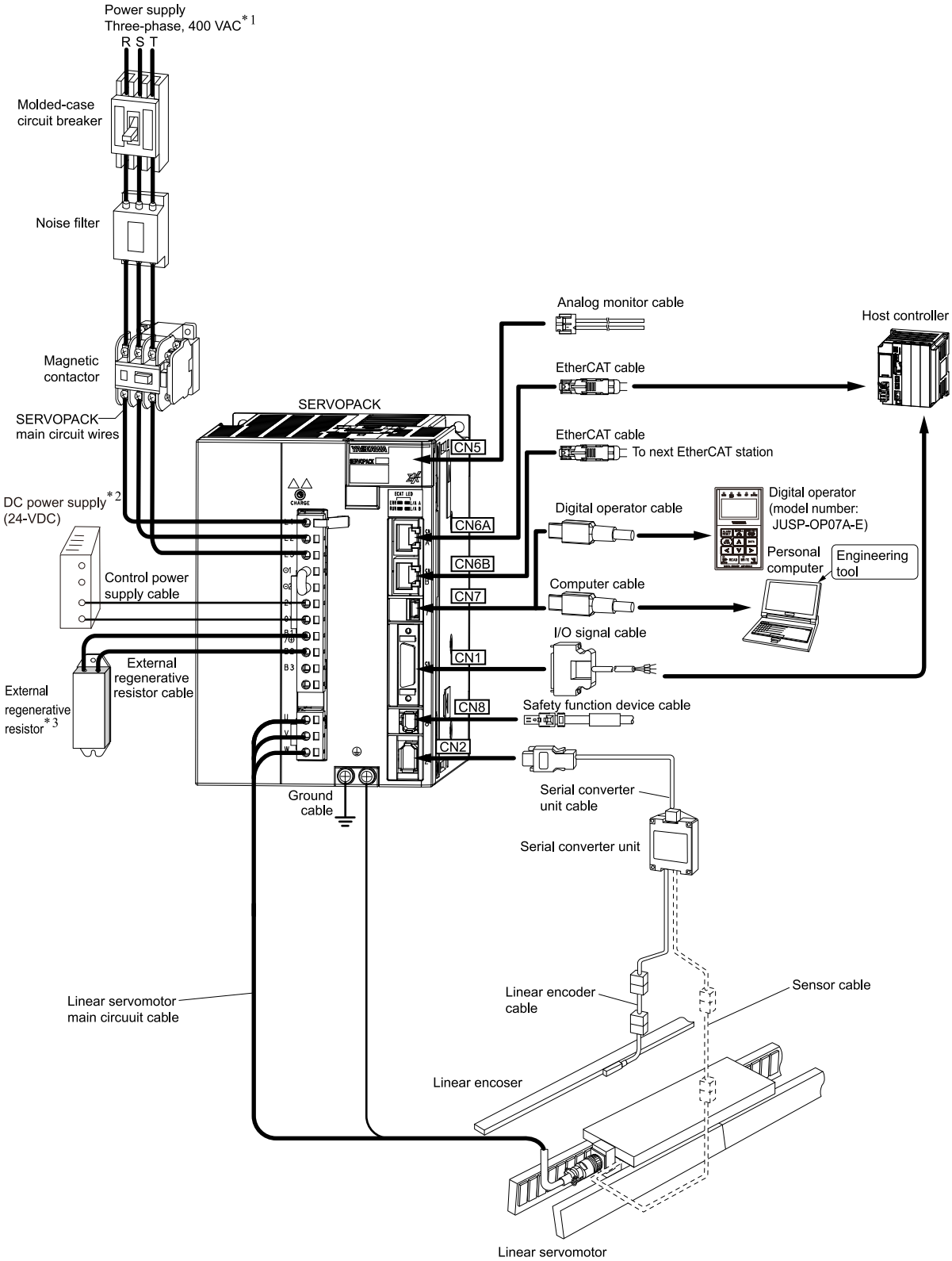

*1 This example is for a SERVOPACK with a three-phase, 400-VAC power supply input. The pin layout of the main circuit connector depends on the voltage.

*2 A DC power supply (24-VDC) is not provided by Yaskawa. Use a DC power supply (24-VDC) with double insulation or reinforced insulation.

*3 External regenerative resistors are not provided by Yaskawa.

3

SERVOPACK Installation

This chapter provides information on installing SERVOPACKs in the required locations.

3.1 Installation Precautions 104

3.2 Mounting Types and Orientation 105

3.3 Mounting Hole Dimensions 106

3.3.1 Σ-X-series Mounting Hole Dimensions 106

3.4 Mounting Interval 107

3.4.1 Installing One SERVOPACK in a Control Panel 107

3.4.2 Installing More Than One SERVOPACK in a Control Panel 107

3.5 Monitoring the Installation Environment 108

3.6 Derating Specifications 109

3.6.1 SGDXS-R70A, -R90A, -1R6A, -2R8A 109

3.6.2 SGDXS-3R8A, -5R5A, -7R6A, -120A, -180A, -200A, -330A, -470A, -550A, -590A, -780A 109

3.6.3 SGDXS-□□□D 109

3.7 EMC Installation Conditions 110

3.7.1 Three-Phase, 200 VAC 110

3.7.2 Single-Phase, 200 VAC 111

3.7.3 270 VDC 112

3.7.4 Three-Phase, 400 VAC 113

3.7.5 540 VDC 114

3.1 Installation Precautions

Refer to the following section for the surrounding installation conditions.

☞ *2.1.3 Specification on page 75*

- Installation Near Sources of Heat
  Implement measures to prevent temperature increases caused by radiant or convection heat from heat sources so that the surrounding temperature of the SERVOPACK meets the surrounding conditions.
- Installation Near Sources of Vibration
  Install a vibration absorber on the installation surface of the SERVOPACK so that the SERVOPACK will not be subjected to vibration.
- Others
  Do not install the SERVOPACK in a location subject to high temperatures, high humidity, water drops, cutting oil, excessive dust, excessive dirt, excessive iron powder, corrosive gasses, or radioactivity.

3.2 Mounting Types and Orientation

The SERVOPACKs come in the following mounting types: base-mounted, rack-mounted, and duct-ventilated types.

Applicable SERVOPACK models for each mounting type are listed below.

Mounting Type	SERVOPACK Model: SGDXS-
Base-mounted SERVOPACK	All models
Rack-mounted SERVOPACK	R70A, R90A, 1R6A, 2R8A, 3R8A, 5R5A, 7R6A, 120A, 180A, 200A, 330A, 1R9D, 3R5D, 5R4D, 8R4D, 120D, 170D
Duct-ventilated SERVOPACK	470A, 550A, 590A, 780A, 210D, 260D, 280D, 370D

Regardless of the mounting type, mount the SERVOPACK vertically, as shown in the following figures.

Also, mount the SERVOPACK so that the front panel is facing toward the operator.

Note:

Prepare two to four mounting holes for the SERVOPACK and mount it securely in the mounting holes. (The number of mounting holes depends on the capacity of the SERVOPACK.)

- Base-mounted SERVOPACK

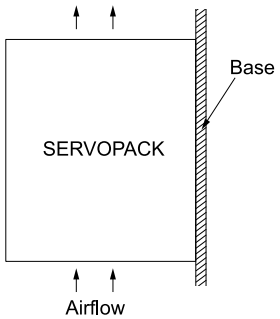

- Rack-mounted SERVOPACK

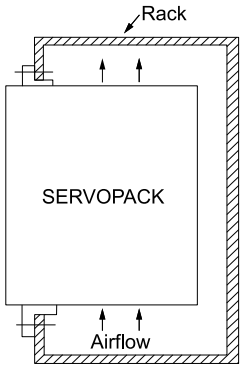

- Duct-ventilated SERVOPACK

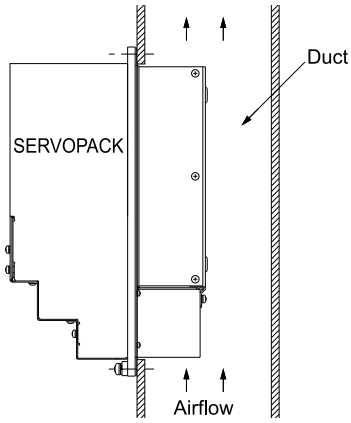

3.3 Mounting Hole Dimensions

Use mounting holes to securely mount the SERVOPACK to the mounting surface.

Note:

To mount the SERVOPACK, prepare a screwdriver that is longer than the depth of the SERVOPACK.

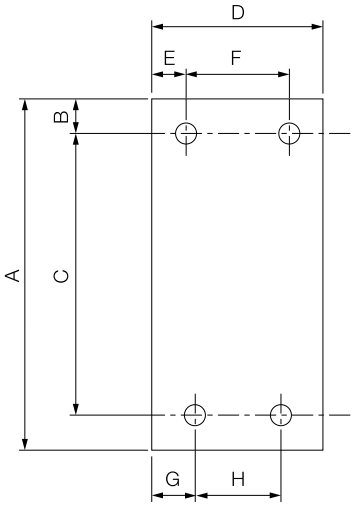

3.3.1 Σ-X-series Mounting Hole Dimensions

SERVOPACK Model SGDXS-	Dimensions (mm)								Screw Size	Number of Screws
	A	B	C	D	E	F	G	H		
R70A, R90A, 1R6A	168	5	160±0.5	40	35	–	25	–	M4	2
2R8A	168	5	160±0.5	40	5	–	25	–	M4	2
3R8A, 5R5A, or 7R6A	168	5	160±0.5	70	6	58±0.5	64	–	M4	3
120A, 120A□□□0008	168	5	160±0.5	90	5	80±0.5	12.5	–	M4	3
180A, 200A	188	5	180±0.5	100	95	–	12.5	75±0.5	M4	3
330A	258	6	250±0.5	110	5	100±0.5	13	84±0.5	M5	4
470A, 550A	315	6	302.5±0.5	170	14	142±0.5	14	142±0.5	M6	4
590A, 780A	390	7.5	375±0.5	260	30	200±0.5	30	200±0.5	M6	4
1R9D, 3R5D, 5R4D	160	5.5	149.5±0.5	110	5	100±0.5	5	–	M4	3
8R4D, 120D, 170D	250	6	238.5±0.5	110	5	100±0.5	5	100±0.5	M5	4
210D, 260D, 280D, 370D	350	7.5	335±0.5	230	25	180±0.5	25	180±0.5	M6	4

3.4 Mounting Interval

3.4.1 Installing One SERVOPACK in a Control Panel

Provide the following spaces around the SERVOPACK.

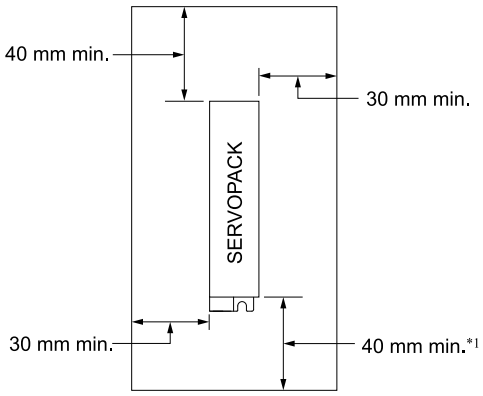

*1 For this dimension, ignore items protruding from the main body of the SERVOPACK.

3.4.2 Installing More Than One SERVOPACK in a Control Panel

When multiple SERVOPACKs are installed close together in a enclosed space, the surrounding temperature of the SERVOPACKs may locally exceed the surrounding air temperature range, and air circulation due to natural convection may be insufficient. In this case, you must take measures to disperse the localized hot spots, such as using fans. When using fans, install them as shown below.

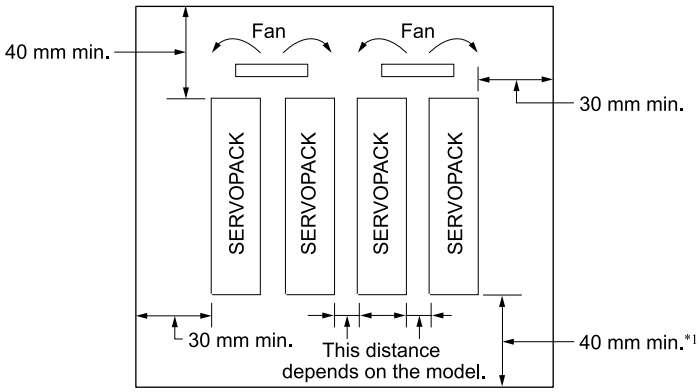

*1 For this dimension, ignore items protruding from the main body of the SERVOPACK.

The space required on the right side of a SERVOPACK (when looking at the SERVOPACK from the front) depends on the SERVOPACK models. Refer to the following table.

SERVOPACK Model		Space on Right Side	Cooling Fan Installation Conditions
			10 mm above SERVOPACK's Top Surface
SGDXS-	R70A, R90A, 1R6A, 2R8A, 3R8A, 5R5A, 7R6A	1 mm min.	Air speed: 1.0 m/s min.
	120A, 180A, 200A, 330A, 470A, 550A, 590A, 780A, □□□D	10 mm min.	Air speed: 1.0 m/s min.

Note:

When option modules are mounted on SERVOPACKs, the SERVOPACK installation conditions will depend on the option modules that are mounted. For details, refer to the manual for option module.

3.5 Monitoring the Installation Environment

You can use the SERVOPACK Installation Environment Monitor to check the operating conditions of the SERVOPACK in the installation environment.

You can check the SERVOPACK installation environment monitor with either of the following methods.

- Using the SigmaWin+: [Life Monitor] - [Installation Environment Monitor] - [SERVOPACK]
- Using a digital operator: Un025 (Installation Environment Monitor [%])

Implement one or more of the following actions if the monitor value exceeds 100%.

- Lower the surrounding temperature.
- Decrease the load.
- Increase the spacing between SERVOPACKs.
- Make the air around the SERVOPACK circulate by convection.

Information The value of the SERVOPACK Installation Environment Monitor will increase by about 10% for each 10°C increase in the surrounding temperature.

Important Always observe the surrounding air temperature given in the SERVOPACK environment conditions. Even if the monitor value is 100% or lower, you cannot use a SERVOPACK in a location that exceeds the specified surrounding air temperature.

3.6 Derating Specifications

If you use the SERVOPACK at a surrounding air temperature of 55°C to 60°C or at an altitude of 1000 m to 2000 m, you must apply the derating rates given in the following graphs.

3.6.1 SGDXS-R70A, -R90A, -1R6A, -2R8A

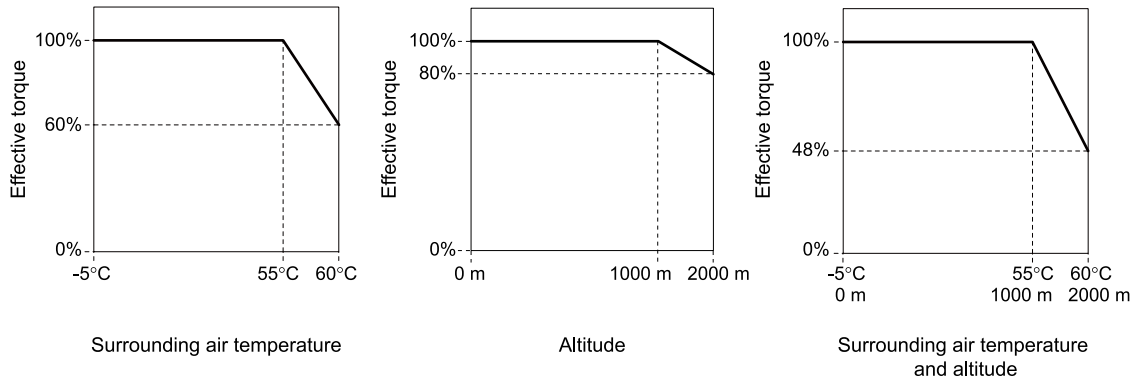

3.6.2 SGDXS-3R8A, -5R5A, -7R6A, -120A, -180A, -200A, -330A, -470A, -550A, -590A, -780A

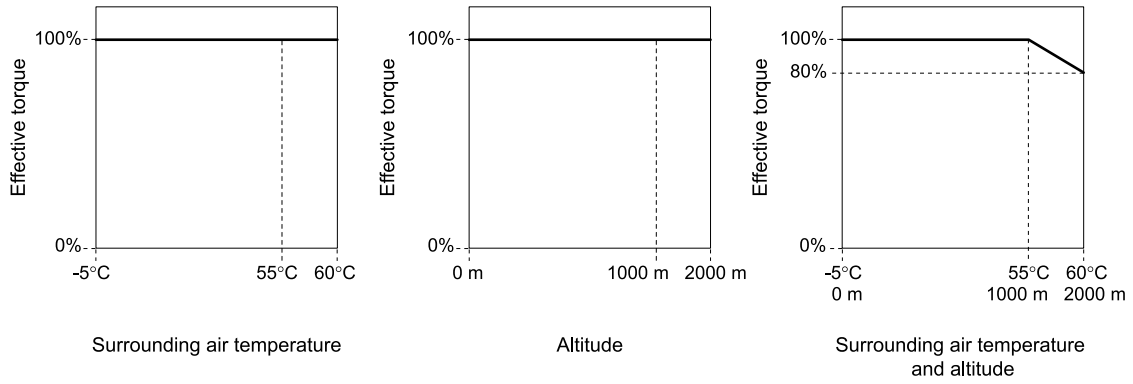

3.6.3 SGDXS-□□□D

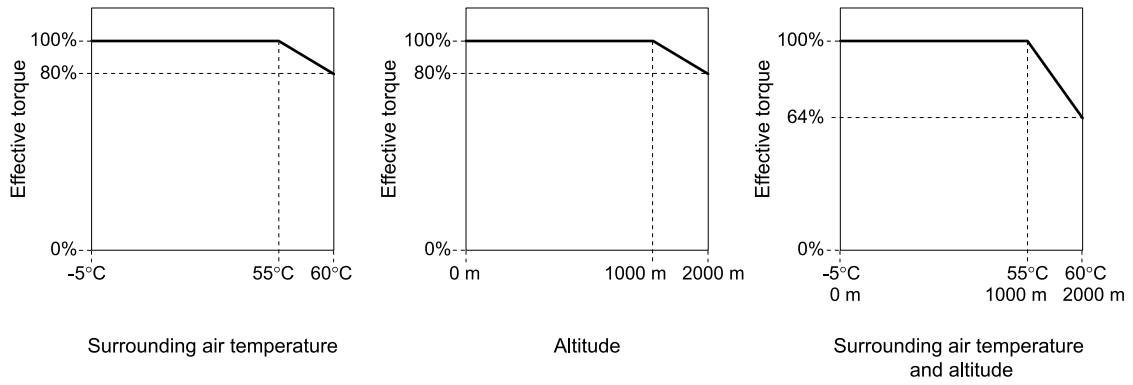

3.7 EMC Installation Conditions

This section gives the installation conditions that were used for EMC certification testing.

The EMC installation conditions that are given here are the conditions that were used to pass testing criteria at Yaskawa. The EMC level may change under other conditions, such as the actual installation structure and wiring conditions. These Yaskawa products are designed to be built into equipment. Therefore, you must implement EMC measures and confirm compliance for the final equipment.

The applicable standards are EN 55011 Group 1 Class A, EN 61000-6-2, EN 61000-6-4, and EN 61800-3 (Category C2, Second environment).

⚠ WARNING

In a domestic environment, this product may cause radio interference in which case supplementary mitigation measures may be required.

⚠ CAUTION

This equipment is not intended for use in residential environments and may not provide adequate protection to radio reception in such environments.

3.7.1 Three-Phase, 200 VAC

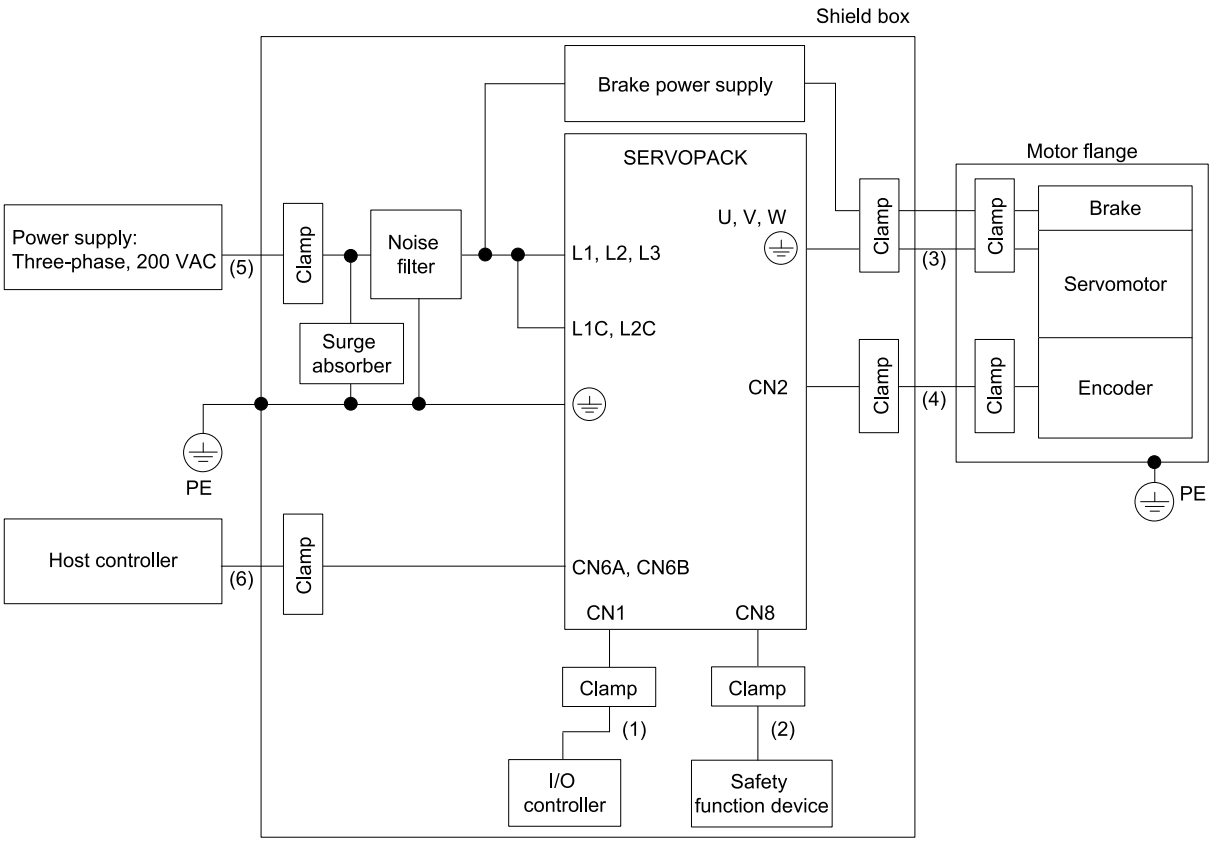

No.	Cable Name	Specification
(1)	I/O signal cable	Shield wire
(2)	Safety function device cable	Shield wire
(3)	Servomotor main circuit cable	Shield wire

Continued on next page.

Continued from previous page.

No.	Cable Name	Specification
(4)	Encoder cable	Shield wire
(5)	Main circuit power cable	Shield wire
(6)	EtherCAT communications cable	Shield wire

3.7.2 Single-Phase, 200 VAC

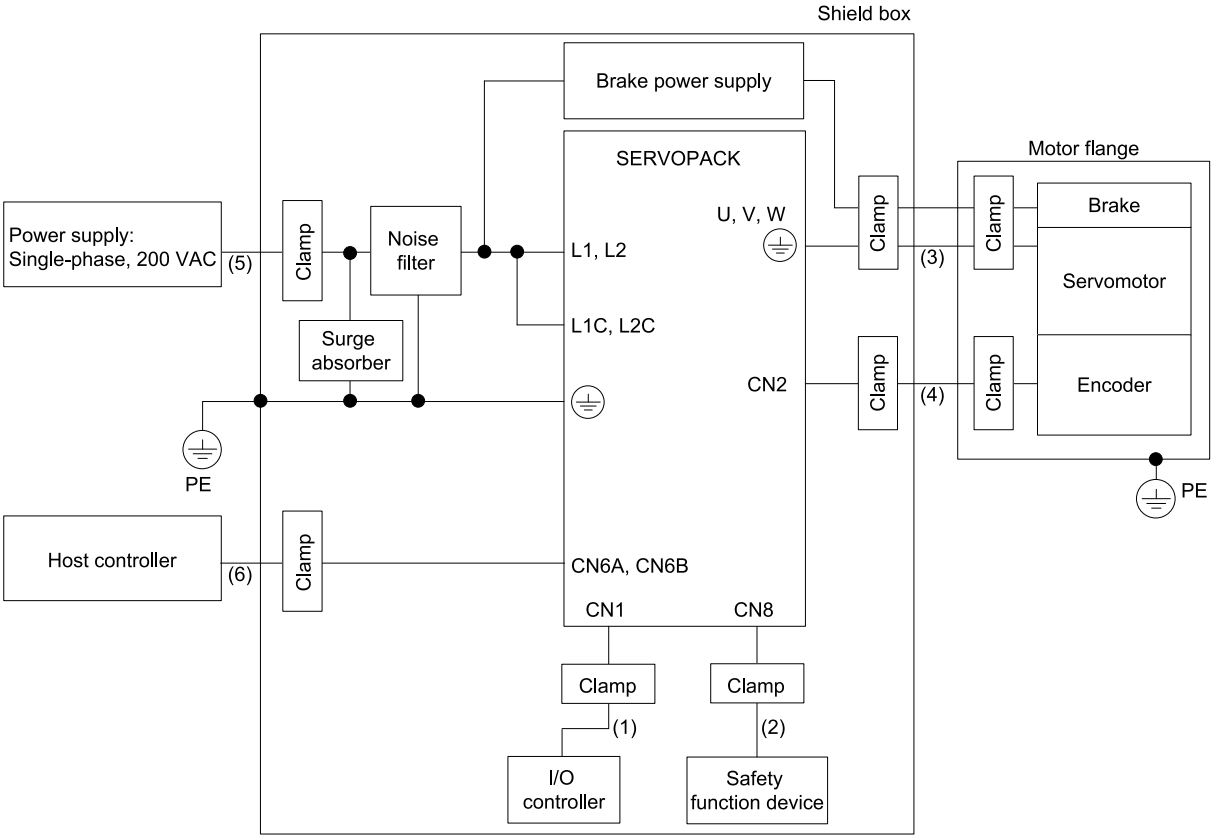

No.	Cable Name	Specification
(1)	I/O signal cable	Shield wire
(2)	Safety function device cable	Shield wire
(3)	Servomotor main circuit cable	Shield wire
(4)	Encoder cable	Shield wire
(5)	Main circuit power cable	Shield wire
(6)	EtherCAT communications cable	Shield wire

3.7.3 270 VDC

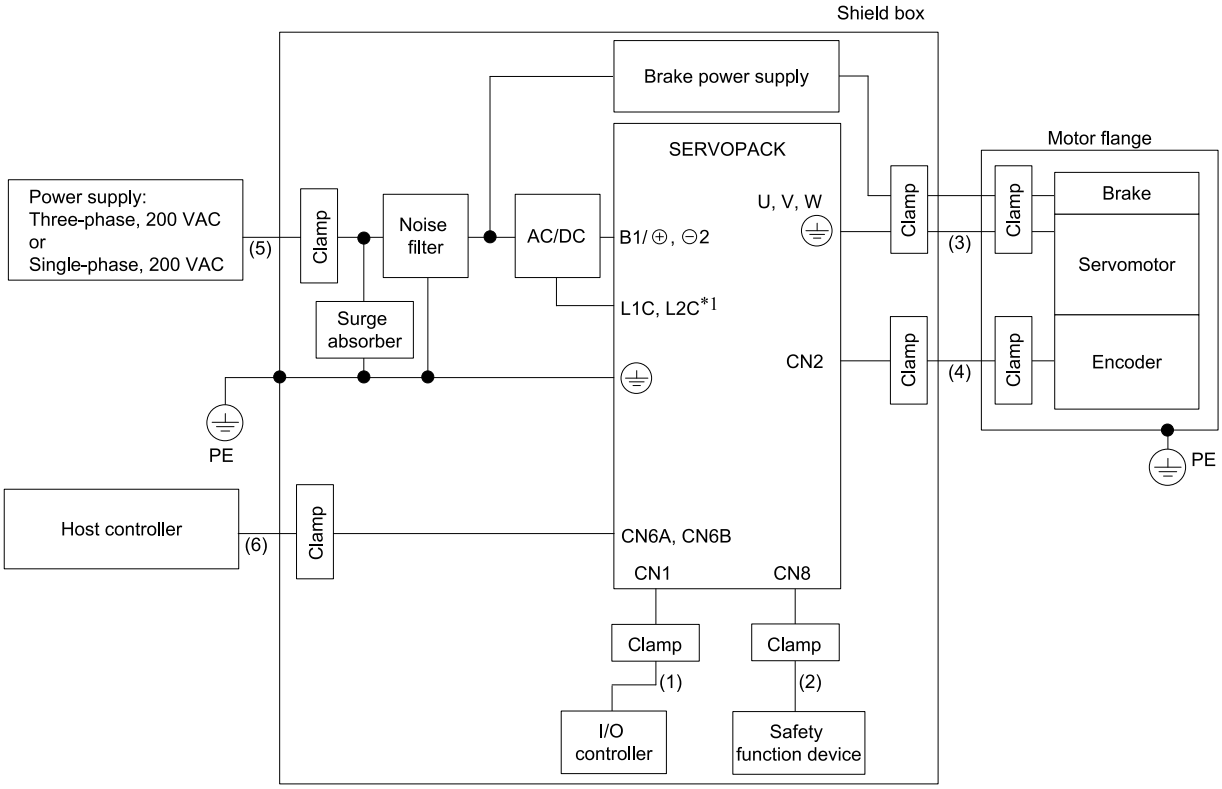

*1 You can also use a single-phase 200-VAC power supply instead of a 270-VDC power supply for input to the L1C and L2C control power supply terminals.

Code	Cable Name	Specification
(1)	I/O signal cable	Shield wire
(2)	Safety function device cable	Shield wire
(3)	Servomotor main circuit cable	Shield wire
(4)	Encoder cable	Shield wire
(5)	Main circuit power cable	Shield wire
(6)	EtherCAT communications cable	Shield wire

3.7.4 Three-Phase, 400 VAC

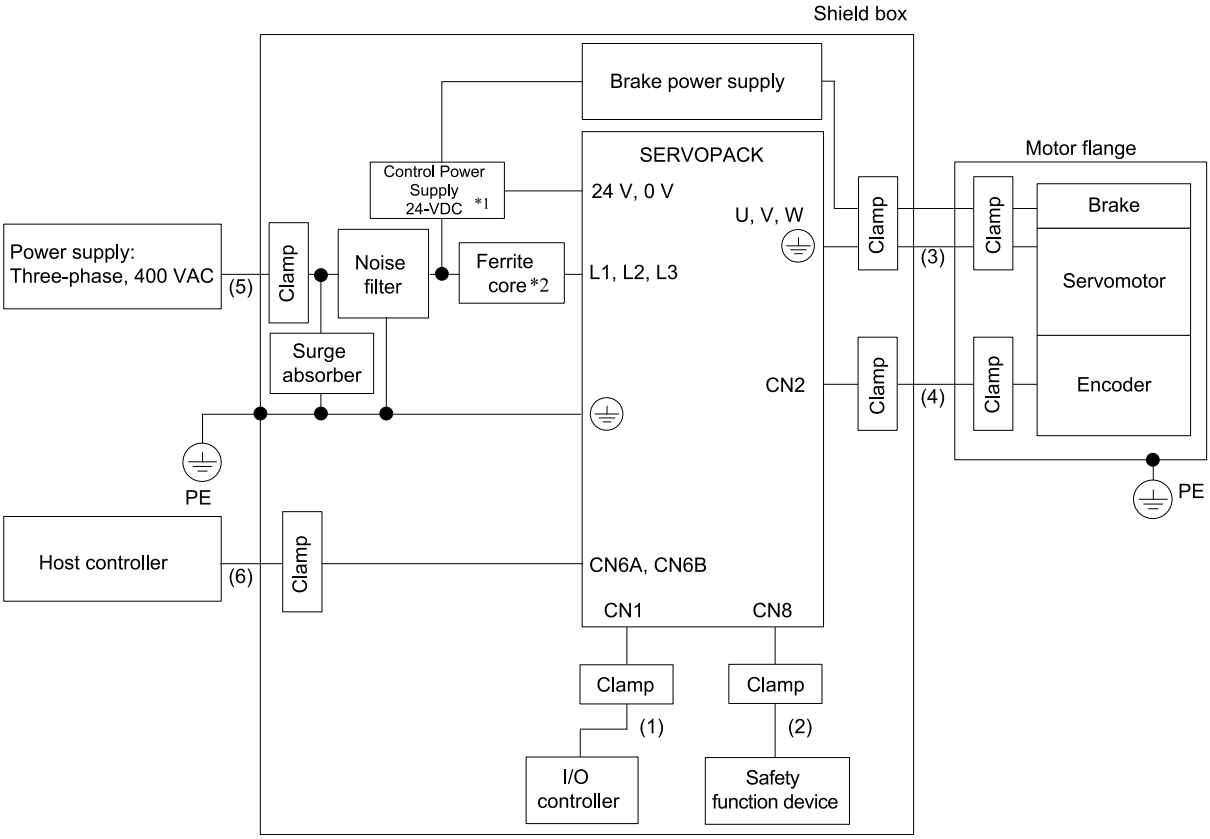

*1 We recommend using a 24-VDC power supply to which the CE marking has been affixed.
*2 A ferrite core (one turn) is required for only the SGDXS-8R4D, -120D, and -170D.

No.	Cable Name	Specification
(1)	I/O signal cable	Shield wire
(2)	Safety function device cable	Shield wire
(3)	Servomotor main circuit cable	Shield wire
(4)	Encoder cable	Shield wire
(5)	Main circuit power cable	Shield wire
(6)	EtherCAT communications cable	Shield wire

3.7.5 540 VDC

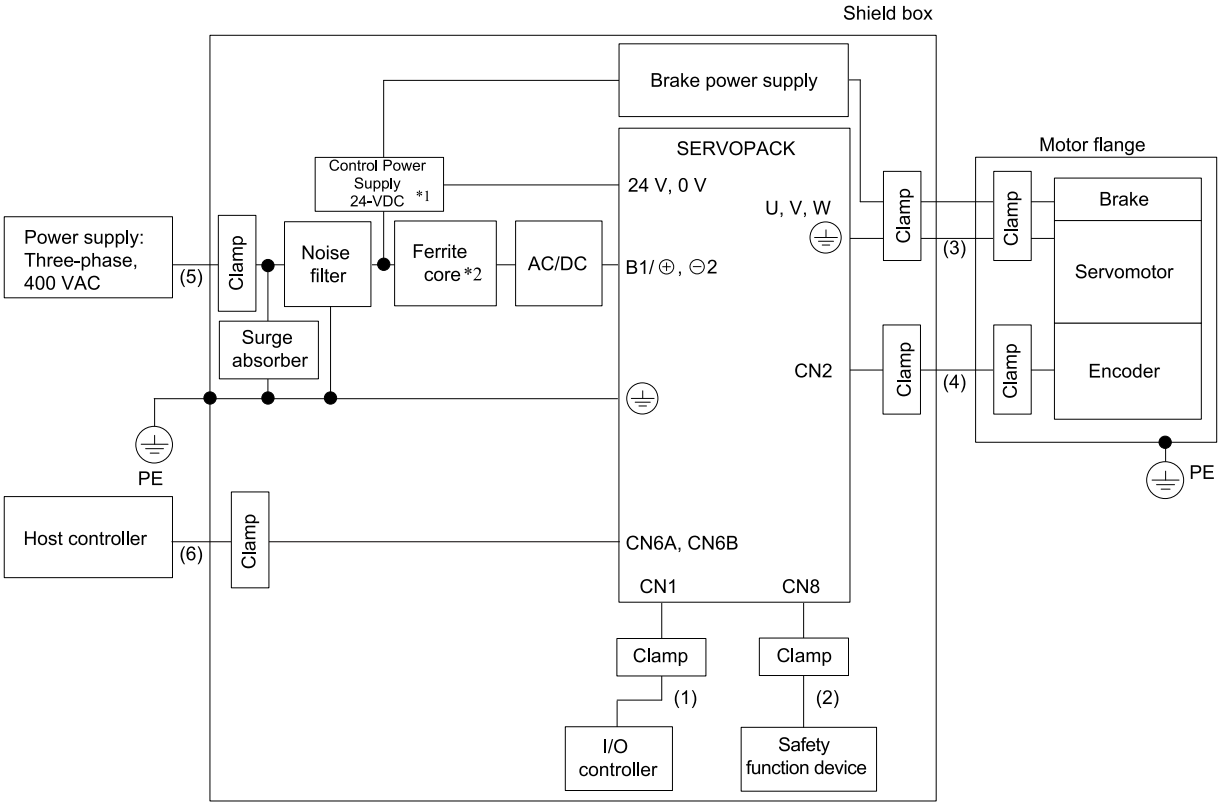

*1 We recommend using a 24-VDC power supply to which the CE marking has been affixed.
*2 A ferrite core (one turn) is required for only the SGDXS-8R4D, -120D, and -170D.

No.	Cable Name	Specification
(1)	I/O signal cable	Shield wire
(2)	Safety function device cable	Shield wire
(3)	Servomotor main circuit cable	Shield wire
(4)	Encoder cable	Shield wire
(5)	Main circuit power cable	Shield wire
(6)	EtherCAT communications cable	Shield wire

4

Wiring and Connecting SERVOPACKs

Provides information on wiring and connecting SERVOPACKs to power supplies and peripheral devices.

4.1 Wiring and Connecting SERVOPACKs 117
4.1.1 General Precautions 117
4.1.2 Countermeasures against Noise 119
4.1.3 Grounding 122

4.2 Basic Wiring Diagrams 123
4.2.1 SGDXS-□□□A 124
4.2.2 SGDXS-□□□D 125

4.3 Wiring the Power Supply to the SERVOPACK 127
4.3.1 Terminal Symbols and Terminal Names 127
4.3.2 Wiring Procedure for Main Circuit Connector 130
4.3.3 Power ON Sequence 132
4.3.4 Power Supply Wiring Diagrams 133
4.3.5 Wiring Regenerative Resistors 139
4.3.6 Wiring Reactors for Harmonic Suppression 141

4.4 Wiring Servomotors 143
4.4.1 Terminal Symbols and Terminal Names 143
4.4.2 Pin Layout of Connector for Encoder Cables (CN2) 143
4.4.3 Wiring the SERVOPACK to the Encoder 144
4.4.4 Wiring the SERVOPACK to the Holding Brake 152

4.5 I/O Signal Connections 153
4.5.1 I/O Signal Connector (CN1) Names and Functions 153
4.5.2 I/O Signal Connector (CN1) Pin Layout 155
4.5.3 I/O Signal Wiring Examples 156
4.5.4 I/O Circuits 157

4.6 Connecting Safety Function Signals 160
4.6.1 Pin Layout of Safety Function Signals (CN8) 160
4.6.2 I/O Circuits 160

4.7 Connecting EtherCAT Communications Cables 162

4.8 Connecting the SigmaWin+ 163

4.9 Connecting a Digital Operator 164

4.10 Using the Analog Monitors 165

4.1 Wiring and Connecting SERVOPACKs

4.1.1 General Precautions

⚠ DANGER

Do not change any wiring while power is being supplied.

There is a risk of electric shock or injury.

⚠ WARNING

Wiring and inspections must be performed only by qualified engineers.

There is a risk of electric shock or product failure.

Check all wiring and power supplies carefully.

Incorrect wiring or incorrect voltage application to the output circuits may cause short-circuit failures. If a short-circuit failure occurs as a result of any of these causes, the holding brake will not work. This could damage the machine or cause an accident that may result in death or injury. There is also a risk that some parts damaged by the short-circuit failure may fall from the SERVOPACK.

⚠ WARNING

Always use the specified terminals to connect the SERVOPACK and peripheral devices. For the power supply wiring in particular, confirm that the connections are made with the terminals shown below.

SERVOPACKs with a 200-VAC Power Supply Input

- **Connect an AC power supply to the L1, L2, and L3 terminals and the L1C and L2C terminals on the SERVOPACK.**
- **Connect a DC power supply to the B1/⊕ and ⊖2 terminals and the L1C and L2C terminals on the SERVOPACK.**

SERVOPACKs with a 400-VAC Power Supply Input

- **Connect an AC power supply to the L1, L2, and L3 terminals on the SERVOPACK.**
- **Connect a DC power supply to the B1/⊕ and ⊖2 terminals on the SERVOPACK.**
- **Regardless of whether the main circuit power supply wiring is AC or DC, connect the 24-VDC input for the control power supply to the 24-V and 0-V terminals.**

There is a risk of failure or fire.

⚠ WARNING

If you use a SERVOPACK with the dynamic brake hardware option, connect an external dynamic brake resistor that is suitable for the machine and equipment specifications to the specified terminals.

There is a risk of unexpected operation, machine damage, burning, or injury when an emergency stop is performed.

⚠ CAUTION

Wait for at least 20 minutes (or 100 minutes when using DC power supply input) after turning OFF the power and then make sure that the CHARGE indicator is not lit before starting wiring or inspection work. Do not touch the main circuit terminals while the CHARGE indicator is lit because high voltage may still remain in the SERVOPACK even after turning OFF the power.

There is a risk of electric shock.

Observe the precautions and instructions for wiring and trial operation precisely as described in this document.

Failures caused by incorrect wiring or incorrect voltage application in the brake circuit may cause the SERVOPACK to fail, damage the equipment, or cause an accident resulting in death or injury.

Check the wiring to be sure it has been performed correctly. Connectors and pin layouts are sometimes different for different models. Always confirm the pin layouts in technical documents for your model before operation.

There is a risk of failure or malfunction.

Connect wires to main circuit terminals and motor connection terminals securely with the specified methods and tightening torque.

Insufficient tightening may cause wires and terminal blocks to generate heat due to faulty contact, possibly resulting in fire.

Use shielded twisted-pair cables or screened unshielded multi-twisted-pair cables for I/O signal cables and encoder cables.

⚠ CAUTION

The maximum wiring length is 3 m for I/O signal cables and 50 m for servomotor main circuit cables and encoder cables. The maximum wiring length is 10 m for the control power supply cables (+24 V and 0 V) for SERVOPACKs with a 400-V power supply input.

⚠ CAUTION

Observe the following precautions when wiring the SERVOPACK's main circuit terminals.

- **Turn ON the power to the SERVOPACK only after all wiring, including the main circuit terminals, has been completed.**
- **If a connector is used for the main circuit terminals, remove the main circuit connector from the SERVOPACK before you wire it.**
- **Insert only one wire per insertion hole in the main circuit terminals.**
- **When you insert a wire, make sure that the conductor wire (e.g., whiskers) does not come into contact with adjacent wires and cause a short-circuit.**

Install molded-case circuit breakers and other safety measures to provide protection against short circuits in external wiring.

There is a risk of fire or failure.

NOTICE

Whenever possible, use the cables specified by Yaskawa. If you use any other cables, confirm the rated current and application environment of your model and use the wiring materials specified by Yaskawa or equivalent materials.

Securely tighten connector screws and lock mechanisms.

Insufficient tightening may result in connectors falling off during operation.

NOTICE

Do not bundle power lines (e.g., the main circuit cable) and low-current lines (e.g., the I/O signal cables or encoder cables) together or run them through the same duct. If you do not place power lines and low-current lines in separate ducts, separate them by at least 30 cm.

If the cables are too close to each other, malfunctions may occur due to noise affecting the low-current lines.

Install a battery at either the host controller or on the encoder cable.

If you install batteries both at the host controller and on the encoder cable at the same time, you will create a loop circuit between the batteries, resulting in a risk of damage or burning.

When connecting a battery, connect the polarity correctly.

There is a risk of battery rupture or encoder failure.

Important

- Use a molded-case circuit breaker or fuse to protect the main circuit.
  The SERVOPACK connects directly to a commercial power supply; it is not isolated through a transformer or other device. Always use a molded-case circuit breaker or fuse to protect the servo system from accidents involving different power system voltages or other accidents.
- Install an earth leakage breaker.
  The SERVOPACK does not have a built-in ground fault protective circuit. To configure a safer system, install a ground fault detector against overloads and short-circuiting, or install a ground fault detector combined with a molded-case circuit breaker.
- Do not turn the power ON and OFF more than necessary.
  - Do not use the SERVOPACK for applications that require the power to be turned ON and OFF frequently. Such applications will cause elements in the SERVOPACK to deteriorate.
  - After you have started actual operation, allow at least one hour between turning the power ON and OFF (as a guideline).

To ensure safe, stable application of the servo system, observe the following precautions when wiring.

- Use the cables specified by Yaskawa. Design and arrange the system so that each cable is as short as possible. Refer to the following manual or catalog for information on the specified cables.

  Σ-X-Series Catalog (Catalog No.: KAEP C710812 03)

  Σ-X-Series Peripheral Device Selection Manual (Manual No.: SIEP C710812 12)
- The signal cable conductors are as thin as 0.2 mm^2 or 0.3 mm^2. Do not subject them to excessive bending stress or tension.

4.1.2 Countermeasures against Noise

Important

The SERVOPACK is designed as an industrial device.

It therefore provides no measures to prevent radio interference. The SERVOPACK uses high-speed switching elements in the main circuit. Therefore peripheral devices may be affected by switching noise. If the equipment is to be used near private houses or if radio interference is a problem, take countermeasures against noise.

The SERVOPACK uses microprocessors. Therefore, it may be affected by switching noise from peripheral devices.

To prevent the noise from the SERVOPACK or the peripheral devices from causing malfunctions of any devices, take the following countermeasures against noise as required.

- Install the input reference device and noise filter as close to the SERVOPACK as possible.
- Always install a surge absorber for relays, solenoids, and magnetic contactor coils.
- Do not place the following cables in the same duct or bundle them together. Also, separate the cables from each other by at least 30 cm.
  - Main circuit cables and I/O signal cables
  - Main circuit cables and host controller cables
  - Main circuit cables and encoder cables
- Do not share the power supply with an electric welder or electrical discharge machine. If the SERVOPACK is placed near a high-frequency generator, install noise filters on the input side on the main circuit power supply

cable and control power supply cable even if the same power supply is not shared with the high-frequency generator. Refer to the following section for information on connecting noise filters.
☞ *(1) Noise Filters on page 120*

- Implement suitable grounding measures. Refer to the following section for information on grounding measures.
☞ *4.1.3 Grounding on page 122*

(1) Noise Filters

You must attach noise filters in appropriate places to protect the SERVOPACK from the adverse effects of noise.

The following is an example of wiring for countermeasures against noise.

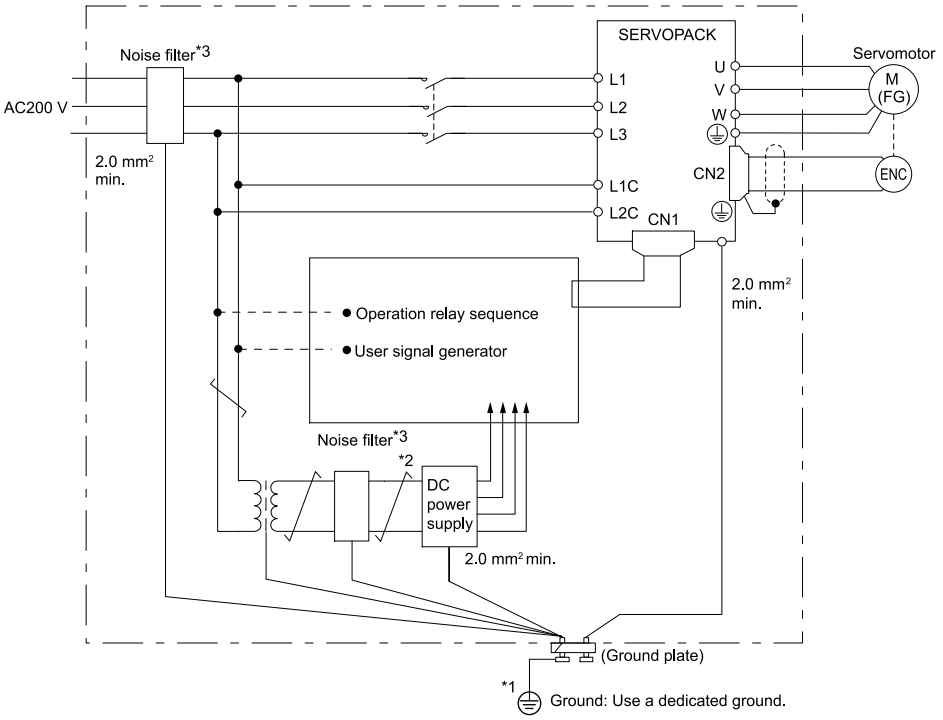

*1 For the ground wire, use a wire with a thickness of at least 2.0 mm ² (preferably, flat braided copper wire).

*2 Whenever possible, use twisted-pair wires to wire all connections marked with this symbol.

*3 Refer to the following section for precautions when using noise filters.
☞ *(2) Noise Filter Wiring and Connection Precautions on page 120*

(2) Noise Filter Wiring and Connection Precautions

Always observe the following precautions when wiring or connecting noise filters.

- Separate input lines from output lines. Do not place input lines and output lines in the same duct or bundle them together.

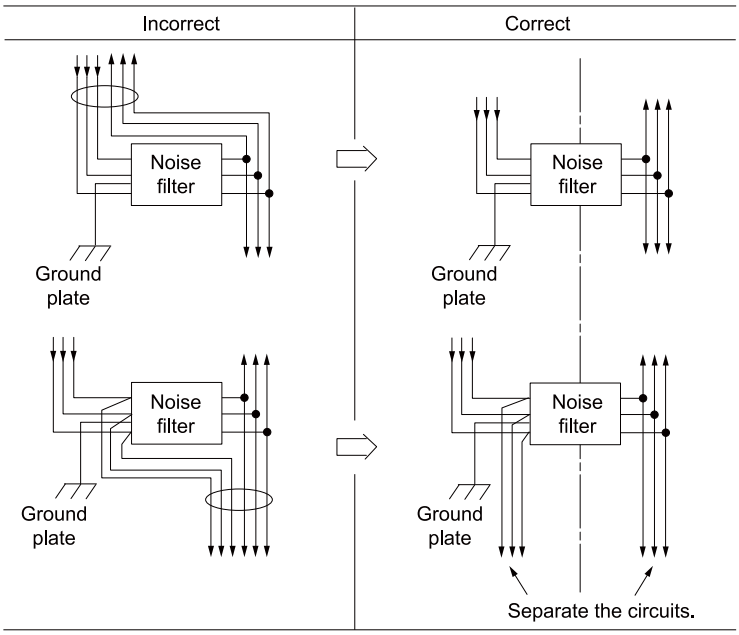

- Separate the noise filter ground wire from the output lines. Do not place the noise filter ground wire, output lines, and other signal lines in the same duct or bundle them together.

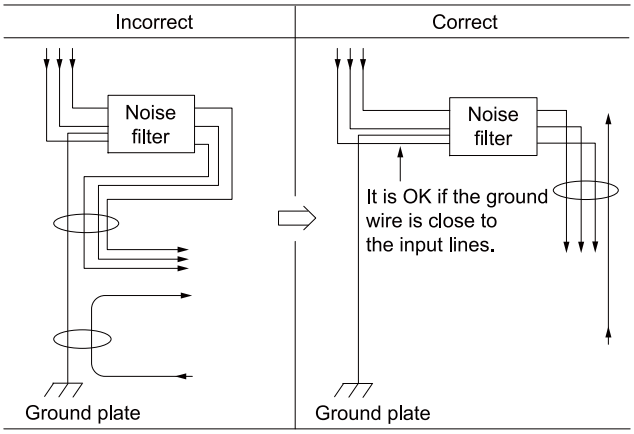

- Connect the noise filter ground wire directly to the grounding plate. Do not connect the noise filter ground wire to other ground wires.

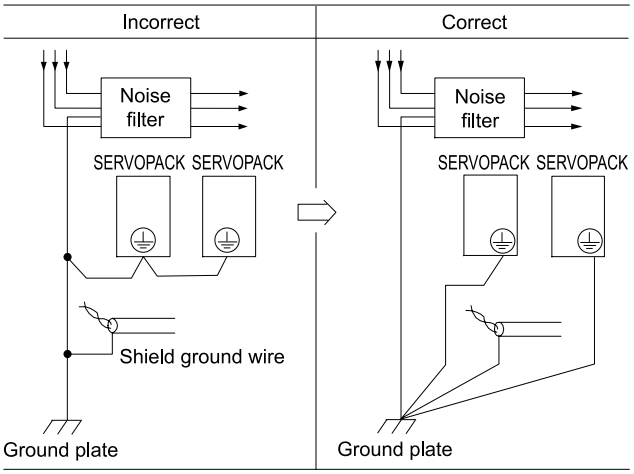

- If a noise filter is located inside a control panel, first connect the noise filter ground wire and the ground wires from other devices inside the control panel to the grounding plate for the control panel, then ground the plate.

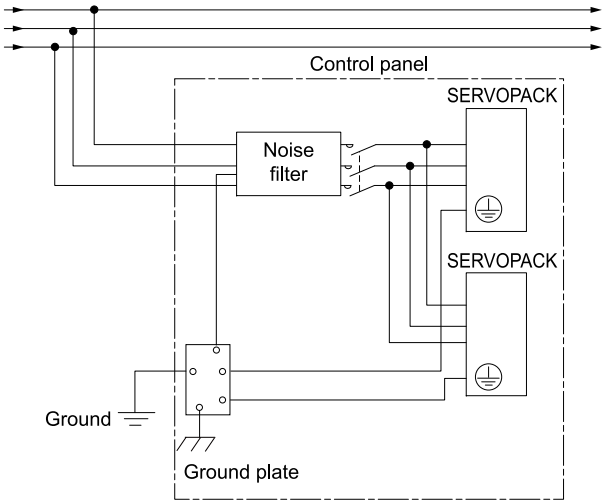

4.1.3 Grounding

Implement grounding measures as described in this section. Implementing suitable grounding measures will also help prevent malfunctions, which can be caused by noise.

Observe the following precautions when wiring the ground cable.

- Ground the SERVOPACK to a resistance of 100 Ω or less.
- Be sure to ground at one point only.
- Ground the servomotor directly if the servomotor is insulated from the machine.

(1) Motor Frame Ground or Motor Ground

If you ground the servomotor through the machine, switching noise current can flow from the main circuit of the SERVOPACK through the stray capacitance of the servomotor. To prevent this, always connect the FG terminal of the servomotor main circuit cable connected to the servomotor to the ground terminal ⏚ on the SERVOPACK. Also be sure to ground the ground terminal ⏚. Always connect the shield wire of the encoder cable connected to the servomotor to the connector case (shell).

Ground both the moving coil and magnetic way of a linear servomotor.

(2) Noise on I/O Signal Cables

If noise enters the I/O signal cable, connect the shield of the I/O signal cable to the connector shell to ground it. If the servomotor main circuit cable is placed in a metal conduit, ground the conduit and its junction box. For all grounding, ground at one point only.

4.2 Basic Wiring Diagrams

This section provide the basic wiring diagrams.

Refer to the reference sections given in the diagrams for details.

Item	Reference
Main circuit terminals	*4.3 Wiring the Power Supply to the SERVOPACK on page 127*
Motor terminals	*4.4 Wiring Servomotors on page 143*
CN1	*4.5 I/O Signal Connections on page 153*
CN2	*4.4 Wiring Servomotors on page 143*
CN5	*4.10 Using the Analog Monitors on page 165*
CN8	*4.6 Connecting Safety Function Signals on page 160*

4.2.1 SGDXS-□□□A

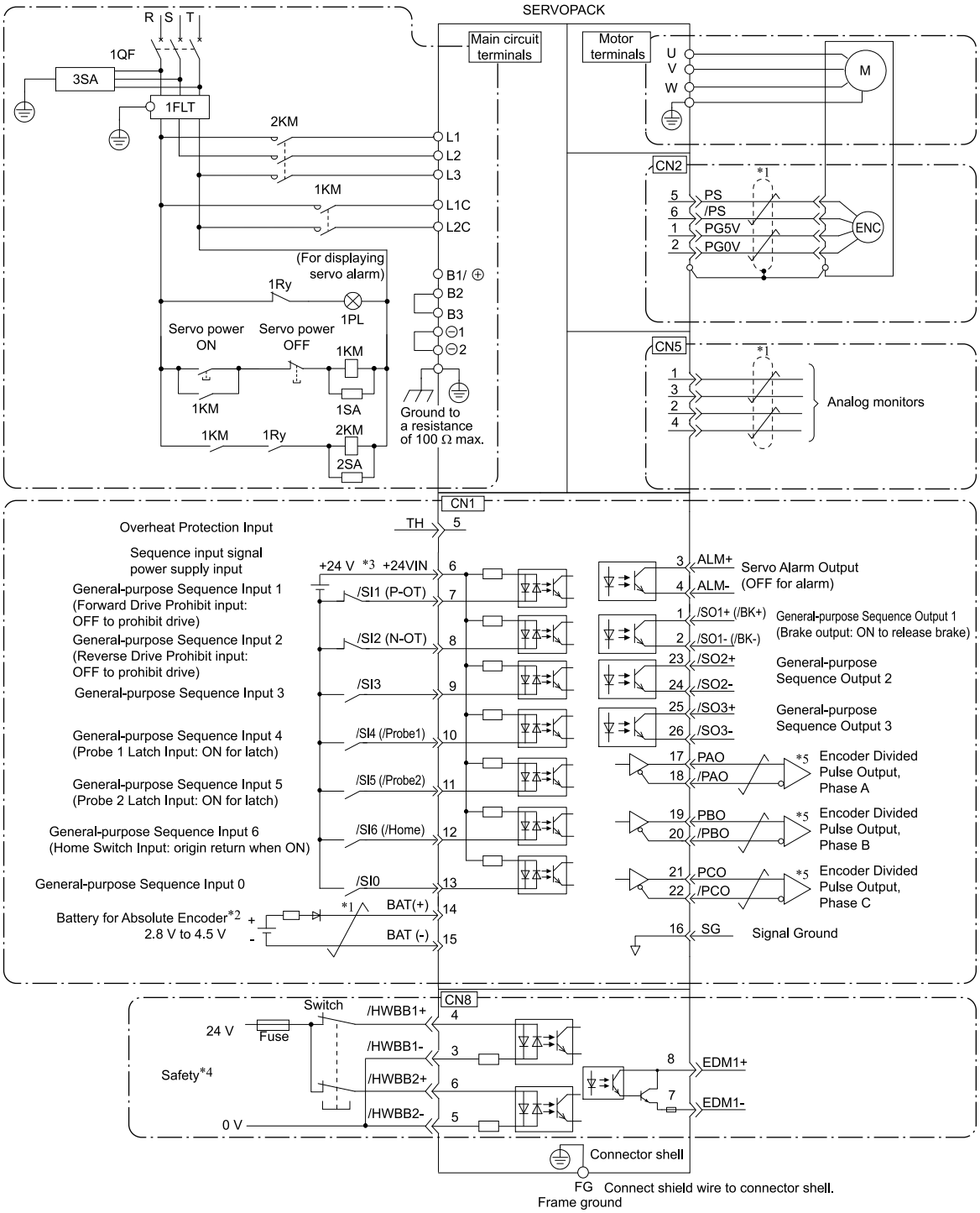

*1 represents twisted-pair wires.

*2 Connect these when using an absolute encoder. If the encoder cable with a battery unit is connected, do not connect a backup battery.

*3 The 24-VDC power supply is not provided by Yaskawa. Use a 24-VDC power supply with double insulation or reinforced insulation.

*4 Refer to the following chapter if you use a Safety Function device.

☞ *4.6 Connecting Safety Function Signals on page 160*

If you do not use the Safety Function, insert the safety jumper connector (provided as an accessory) into CN8 when you use the SERVOPACK.

*5 Always use line receivers to receive the output signals.

Note:

1. You can use parameters to change the functions allocated to the /SI0, /SI3, P-OT, N-OT, /Probe1, /Probe2, and /Home input signals and the /SO1, /SO2, and /SO3 output signals. Refer to the following section for details.
   ☞ *6.1 Changing Allocations of I/O Signals on page 230*
2. If you use a 24-V brake, install a separate power supply for the 24-VDC power supply from other power supplies, such as the one for the I/O signals of the CN1 connector. If the power supply is shared, the I/O signals may malfunction.
3. Default settings are given in parentheses.

4.2.2 SGDXS-□□□D

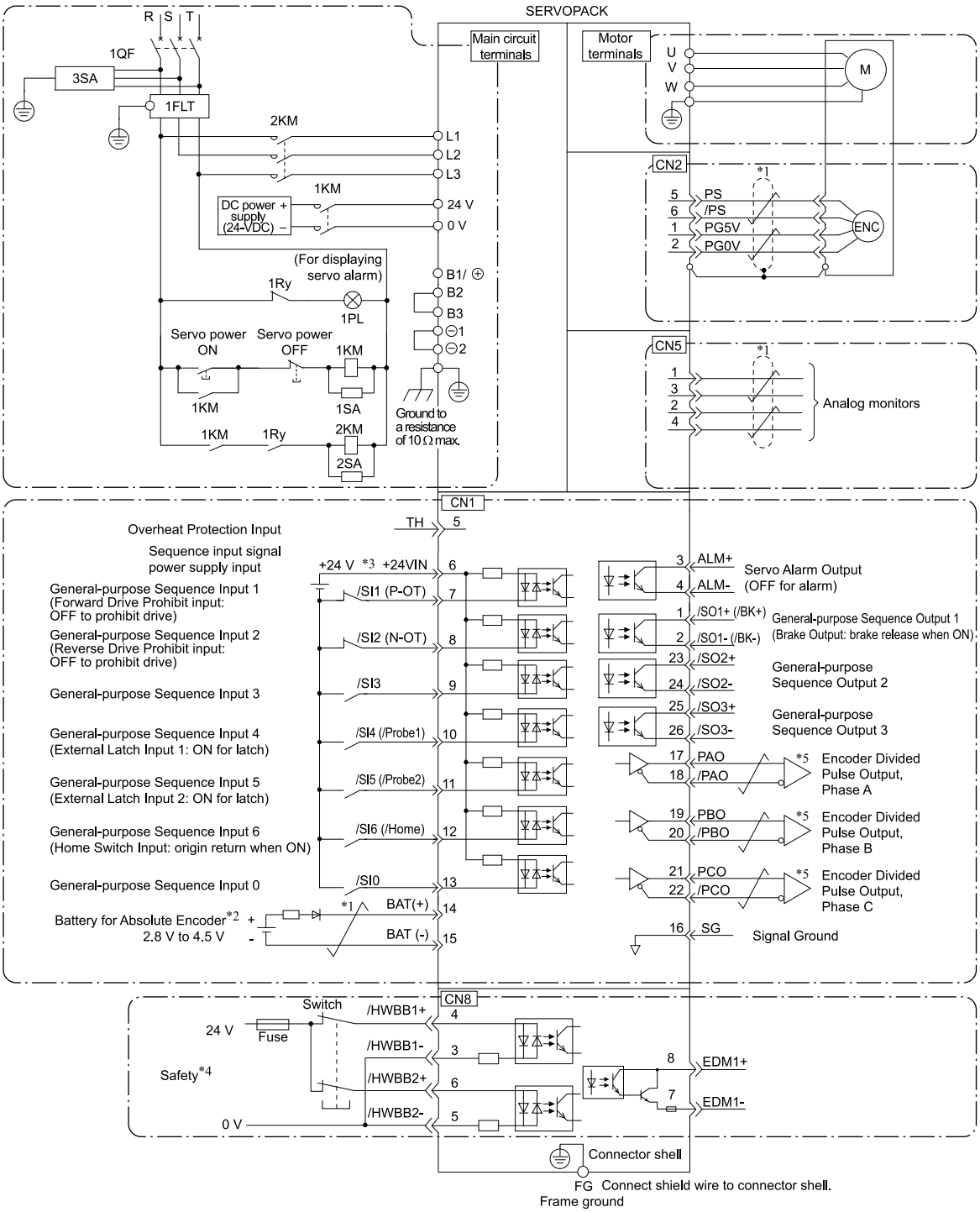

*1 represents twisted-pair wires.

*2 Connect these when using an absolute encoder. If the encoder cable with a battery unit is connected, do not connect a backup battery.

*3 The 24-VDC power supply is not provided by Yaskawa. Use a 24-VDC power supply with double insulation or reinforced insulation.

*4 Refer to the following chapter if you use a Safety Function device.
☞ *4.6 Connecting Safety Function Signals on page 160*
If you do not use the Safety Function, insert the safety jumper connector (provided as an accessory) into CN8 when you use the SERVOPACK.

*5 Always use line receivers to receive the output signals.

Note:

1. You can use parameters to change the functions allocated to the /SI0, /SI3, P-OT, N-OT, /Probe1, /Probe2, and /Home input signals and the /SO1, /SO2, and /SO3 output signals. Refer to the following section for details.
☞ *6.1 Changing Allocations of I/O Signals on page 230*
2. If you use a 24-V brake, install a separate power supply for the 24-VDC power supply from other power supplies, such as the one for the I/O signals of the CN1 connector. If the power supply is shared, the I/O signals may malfunction.
3. Default settings are given in parentheses.

4.3 Wiring the Power Supply to the SERVOPACK

Refer to the following manual or catalog for information on cables and peripheral devices.

Σ-X-Series Catalog (Catalog No.: KAEP C710812 03)

Σ-X-Series Peripheral Device Selection Manual (Manual No.: SIEP C710812 12)

4.3.1 Terminal Symbols and Terminal Names

Use the main circuit connector on the SERVOPACK to wire the main circuit power supply and control circuit power supply to the SERVOPACK.

⚠ CAUTION

Wire all connections correctly according to the following table and the reference information.

There is a risk of SERVOPACK failure or fire if incorrect wiring is performed.

The SERVOPACKs have the following types of main circuit power supply input specifications.

- Three-phase, 200-VAC power supply input
- Single-phase, 200-VAC power supply input
- 270-VDC power supply input
- Three-phase, 400-VAC power supply input
- 270-VDC power supply input

Information A single-phase AC power supply or a DC power supply can be connected to the control power supply terminals of the SGDXS-□□□A.

(1) Three-Phase, 200-VAC Power Supply Input

Terminal Symbols	Terminal Name	Specifications and Reference	
L1, L2, and L3	Main circuit power input terminals for AC power supply input	Three-phase, 200 VAC to 240 VAC, -15% to +10%, 50 Hz/60 Hz	
L1C, L2C	Control power supply terminals	AC power supply	Single-phase, 200 VAC to 240 VAC, -15% to +10%, 50 Hz/60 Hz
		DC power supply	L1C: 270 VDC to 324 VDC, -15% to +10%, L2C: 0 VDC or L2C: 270 VDC to 324 VDC, -15% to +10%, L1C: 0 VDC
B1/⊕, B2, B3	Regenerative resistor terminals	☞ *4.3.5 Wiring Regenerative Resistors on page 139*	
		For SGDXS-R70A, -R90A, -1R6A, -2R8A If the regenerative capacity is insufficient, connect an external regenerative resistor between B1/⊕and B2. The external regenerative resistor is not included. Obtain it separately.	
		For SGDXS-3R8A,- 5R5A, -7R6A, -120A, -180A, -200A, -330A If the internal regenerative resistor is insufficient, remove the jumper (lead or short bar) between B2 and B3 and connect an external regenerative resistor between B1/⊕ and B2. The external regenerative resistor is not included. Obtain it separately.	
		For SGDXS-470A, -550A, -590A, -780A Connect a regenerative resistor unit between B1/⊕ and B2. Obtain a regenerative resistor unit separately. These models do not have a B3 terminal.	

Continued on next page.

Continued from previous page.

Terminal Symbols	Terminal Name	Specifications and Reference
⊖1,⊖2	DC reactor terminals	☞ *4.3.6 Wiring Reactors for Harmonic Suppression on page 141*
		These terminals are used to connect a DC reactor for harmonic suppression.
⊖	–	None. (Do not connect anything to this terminal.) **Note:** SGDXS-330A to -780A do not have a ⊖ terminal.

(2) Single-Phase, 200-VAC Power Supply Input

Terminal Symbols	Terminal Name	Specifications and Reference	
L1, L2	Main circuit power input terminals for AC power input	Single-phase, 200 VAC to 240 VAC, -15% to +10%, 50 Hz/60 Hz	
L1C, L2C	Control power supply terminals	AC power supply	Single-phase, 200 VAC to 240 VAC, -15% to +10%, 50 Hz/60 Hz
		DC power supply	L1C: 270 VDC to 324 VDC, -15% to +10%, L2C: 0 VDC or L2C: 270 VDC to 324 VDC, -15% to +10%, L1C: 0 VDC
B1/⊕, B2, B3	Regenerative resistor terminals	☞ *4.3.5 Wiring Regenerative Resistors on page 139*	
		For SGDXS-R70A, -R90A, -1R6A, -2R8A If the regenerative capacity is insufficient, connect an external regenerative resistor between B1/⊕ and B2. The external regenerative resistor is not included. Obtain it separately.	
		For SGDXS-5R5A, -120A□□□0008 If the internal regenerative resistor is insufficient, remove the jumper (lead) between B2 and B3 and connect an external regenerative resistor between B1/⊕ and B2. The external regenerative resistor is not included. Obtain it separately.	
⊖1,⊖2	DC reactor terminals	☞ *4.3.6 Wiring Reactors for Harmonic Suppression on page 141*	
		These terminals are to connect a DC reactor for power supply harmonic suppression.	
L3,⊖	–	None. (Do not connect anything to these terminals.)	

You can use a single-phase, 200-VAC power supply input with the following models.

- SGDXS-R70A, -R90A, -1R6A, -2R8A, -5R5A

If you use a single-phase, 200-VAC power supply input for the SERVOPACK's main circuit power supply, set parameter Pn00B to n.□1□□ (use a three-phase power supply input as a single-phase power supply input). Refer to the following section for details.

☞ *5.2.2 Single-phase AC Power Supply Input/Three-phase AC Power Supply Input Setting on page 179*

Information

You do not need to change the setting of Pn00B to n.□1□□ (use a three-phase power supply input as a single-phase power supply input) for a SERVOPACK with a single-phase 200-VAC power supply input (model numbers: SGDXS-120A□□□0008).

(3) 270-VDC Power Supply Input

Terminal Symbols	Terminal Name	Specifications and Reference	
L1C, L2C	Control power supply terminals	AC power supply	Single-phase, 200 VAC to 240 VAC, -15% to +10%, 50 Hz/60 Hz
		DC power supply	L1C: 270 VDC to 324 VDC, -15% to +10%, L2C: 0 VDC or L2C: 270 VDC to 324 VDC, -15% to +10%, L1C: 0 VDC
B1/⊕	Main circuit power supply input terminals for DC power supply input	270 VDC to 324 VDC, -15% to +10%	
⊖2		0 VDC	
L1, L2, L3, B2, B3,⊖1,⊖	–	None. (Do not connect anything to this terminal.) **Note:** • SGDXS-470A to -780A do not have a B3 terminal. • SGDXS-330A to -780A do not have a ⊖ terminal.	

If you use a DC power supply input to the SERVOPACK, make sure to set parameter Pn001 to n.□1□□ (DC power supply input supported) before inputting the power. Refer to the following section for details.

☞ *5.2.1 AC Power Supply Input/DC Power Supply Input Setting on page 178*

(4) Three-Phase, 400-VAC Power Supply Input

Terminal Symbols	Terminal Name	Specifications and Reference
L1, L2, and L3	Main circuit power input terminals for AC power supply input	Three-phase, 380 VAC to 480 VAC, -15% to +10%, 50 Hz/60 Hz
24 V	Control power supply terminals *1	DC24 V, -15% to +15%
0 V		0 VDC
B1/⊕, B2, B3	Regenerative resistor terminals	☞ *4.3.5 Wiring Regenerative Resistors on page 139*
		For SGDXS-1R9D, 3R5D, 5R4D, 8R4D, 120D, 170D If the internal regenerative resistor is insufficient, remove the jumper (lead or short bar) between B2 and B3 and connect an external regenerative resistor between B1/⊕ and B2. The external regenerative resistor is not included. Obtain it separately.
		For SGDXS-210D, 260D, 280D, 370D Connect a regenerative resistor unit between B1/⊕ and B2. Obtain a regenerative resistor unit separately. These models do not have a B3 terminal.
⊖1,⊖2	DC reactor terminals	☞ *4.3.6 Wiring Reactors for Harmonic Suppression on page 141*
		These terminals are used to connect a DC reactor for harmonic suppression.
⊖	–	None. (Do not connect anything to this terminal.) **Note:** SGDXS-170D to 370D do not have a ⊖ terminal.

*1 For the 24-VDC power input to the control power supply terminals, use a power supply that conforms to SELV in EN/IEC 60950-1.

(5) 540-VDC Power Supply Input

Terminal Symbols	Terminal Name	Specifications and Reference
24 V, 0 V	Control power supply terminals *1	24 VDC, ±15%
B1/⊕	Main circuit power supply input terminals for DC power supply input	540 VDC to 679 VDC, -15% to +10%
⊖2		0 VDC

Continued on next page.

Continued from previous page.

Terminal Symbols	Terminal Name	Specifications and Reference
L1, L2, L3, B2, B3, ⊖1,	–	None. (Do not connect anything to these terminals.) **Note:** SGDXS-210D to -370D do not have a B3 terminal.

*1 For the 24-VDC power input to the control power supply terminals, use a power supply that conforms to SELV in EN/IEC 60950-1.

If you use a DC power supply input to the SERVOPACK, make sure to set parameter Pn001 to n.□1□□ (DC power supply input supported) before inputting the power. Refer to the following section for details.

☞ *5.2.1 AC Power Supply Input/DC Power Supply Input Setting on page 178*

4.3.2 Wiring Procedure for Main Circuit Connector

- Required Items

Required Items	Remarks
Spring Opener or Flatblade Screwdriver	– Spring opener SERVOPACK accessory (You can also use model 1981045-1 from Tyco Electronics Japan G.K.)
	– Flat-blade screwdriver Commercially available screwdriver with tip width of 3.0 mm to 3.5 mm

1. **Remove the main circuit connector and motor connector from the SERVOPACK.**

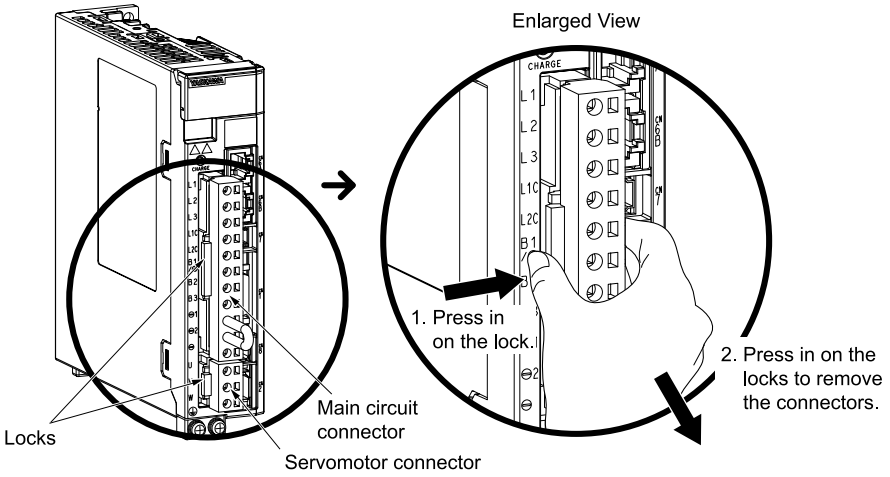

2. **Remove the sheath from the wire to connect.**

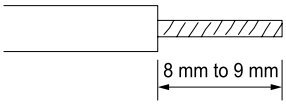

3. **Open the wire insertion hole on the terminal connector with the tool. here are the following two ways to open the insertion hole. Use either method.**

Using a Spring Opener	Using a Flat- blade Screwdriver
Open the insertion hole with the spring opener as shown in the figure. 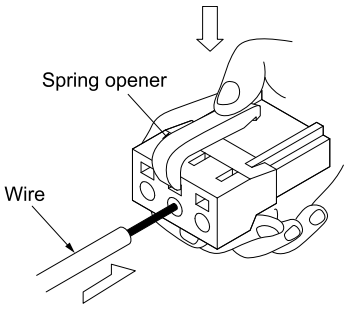	Firmly insert a flat-blade screwdriver into the screwdriver insertion hole to open the wire insertion hole. 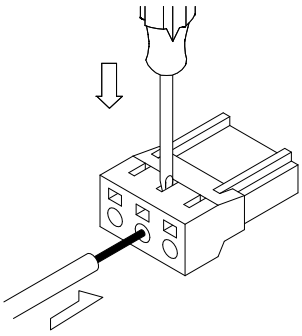

4. **Insert the conductor into the wire insertion hole. Then, remove the spring opener or flat-blade screwdriver.**
5. **Make all other connections in the same way.**
6. **When you have completed wiring, attach the connectors to the SERVOPACK.**

4.3.3 Power ON Sequence

Consider the following points when you design the power ON sequence.

- The ALM (Servo Alarm Output) signal is output for up to ten seconds when the control power is turned ON. Take this into consideration when you design the power ON sequence, and turn ON the main circuit power to the SERVOPACK when the ALM signal is OFF (alarm cleared).

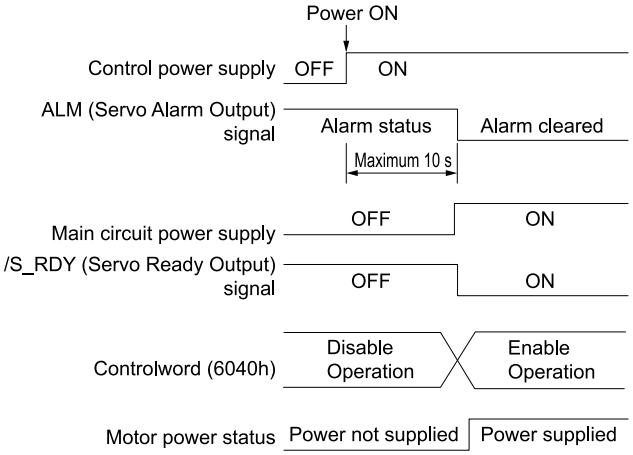

Information If the servo ON state cannot be achieved by inputting the Servo ON command (Enable Operation command), the /S_RDY signal is not ON. Check the status of the /S_RDY signal. Refer to the following section for details.

☞ *6.1.8 /S-RDY (Servo Ready Output) Signal on page 238*

- If you use a DC power supply input with any of the following SERVOPACKs, use the power ON sequence shown below: SGDXS-330A, -470A, -550A, -590A, -780A, -□□□D.

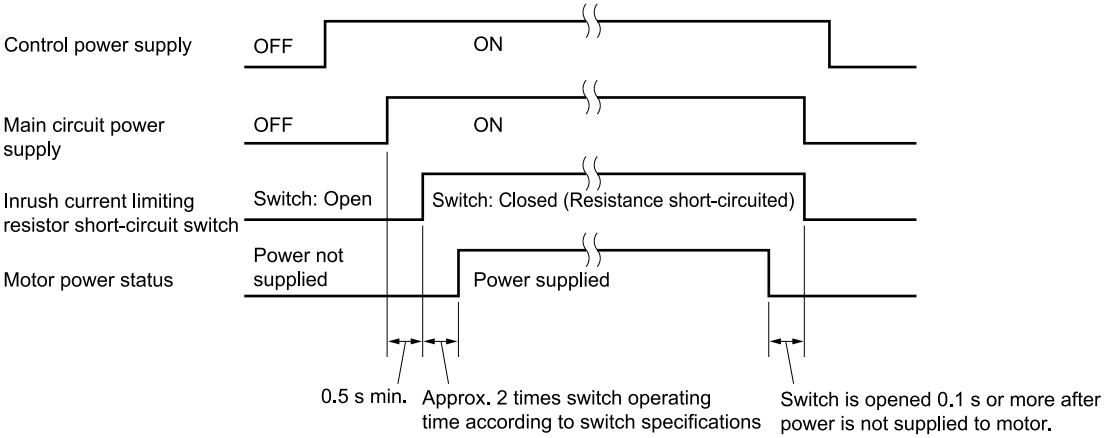

- Design the power ON sequence so that main circuit power is turned OFF when an ALM (Servo Alarm Output) signal is output.
- Make sure that the power supply specifications of all parts are suitable for the input power supply.
- Allow at least 3 s after the power is turned OFF before you turn it ON again.

Important
Turn ON the control power before the main circuit power or turn ON the control power and the main circuit power at the same time.
Turn OFF the main circuit power first, and then turn OFF the control power.

⚠ CAUTION

Wait for at least 20 minutes (or 100 minutes when using DC power supply input) after turning OFF the power and then make sure that the CHARGE indicator is not lit before starting wiring or inspection work. Do not touch the main circuit terminals while the CHARGE indicator is lit because high voltage may still remain in the SERVOPACK even after turning OFF the power.

There is a risk of electric shock.

4.3.4 Power Supply Wiring Diagrams

(1) Using Only One SERVOPACK

(a) Wiring Example for Three-Phase, 200 VAC Power Supply Input: SGDXS-R70A, -1R6A, -2R8A, -3R8A, -5R5A, -7R6A, -120A, -180A, -200A, -330A

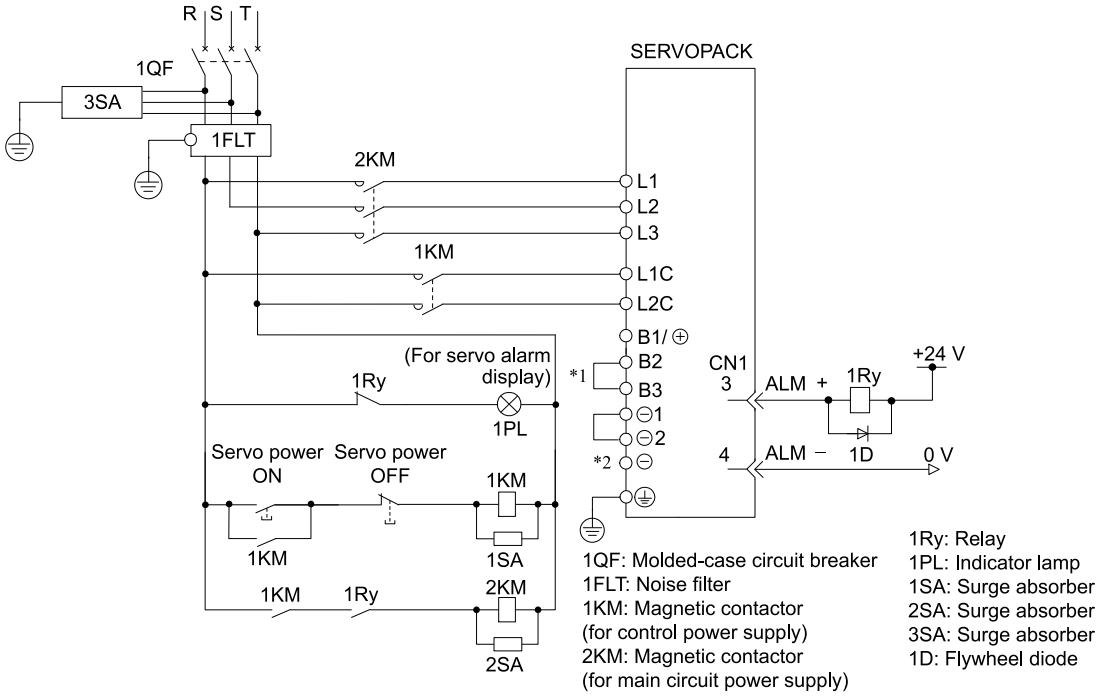

*1 You do not have to connect B2 and B3 for the following models: SGDXS-R70A, -R90A, -1R6A, -2R8A. Do not connect them.

*2 A SGDXS-330A SERVOPACK does not have a ⊖terminal.

(b) Wiring Example for Three-Phase, 200 VAC Power Supply Input: SGDXS-470A, -550A, -590A, -780A

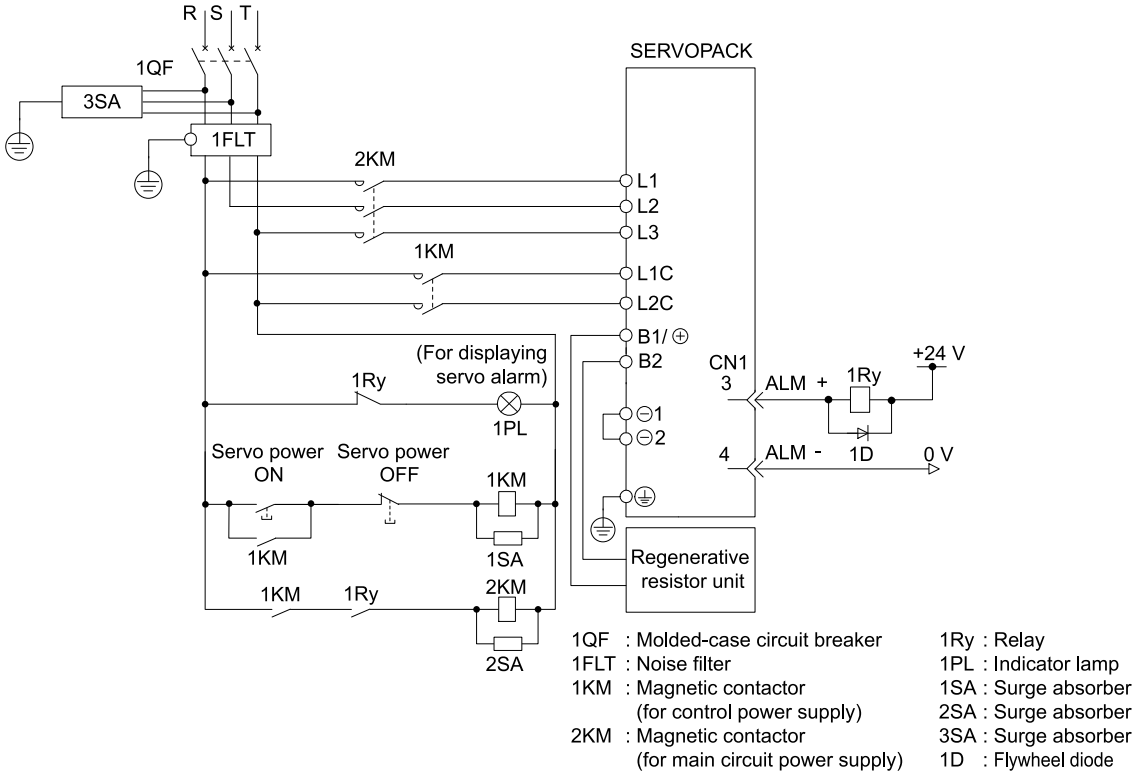

(c) Wiring Example for Single-Phase, 200-VAC Power Supply Input

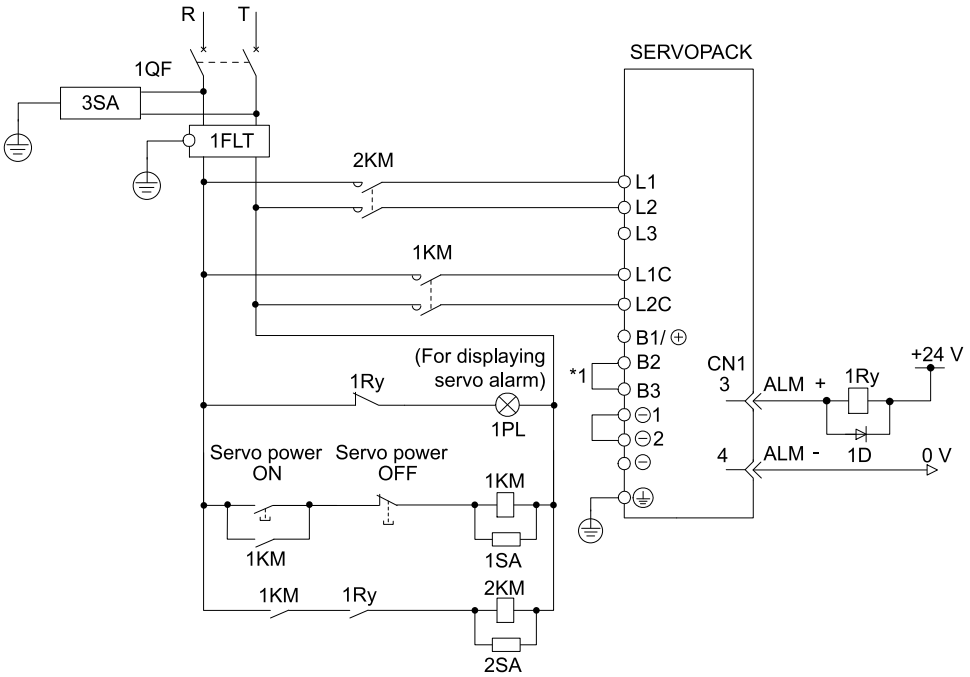

1QF : Molded-case circuit breaker
1FLT : Noise filter
1KM : Magnetic contactor (for control power supply)
2KM : Magnetic contactor (for main circuit power supply)
1Ry : Relay
1PL : Indicator lamp
1SA : Surge absorber
2SA : Surge absorber
3SA : Surge absorber
1D : Flywheel diode

*1 You do not have to connect B2 and B3 for the following models: SGDXS-R70A, -R90A, -1R6A, -2R8A. Do not connect them.

(d) Wiring Example for 270-VDC Power Supply Input: SGDXS-R70A, -R90A, -1R6A, -2R8A, -3R8A, -5R5A, -7R6A, -120A, -180A, -200A

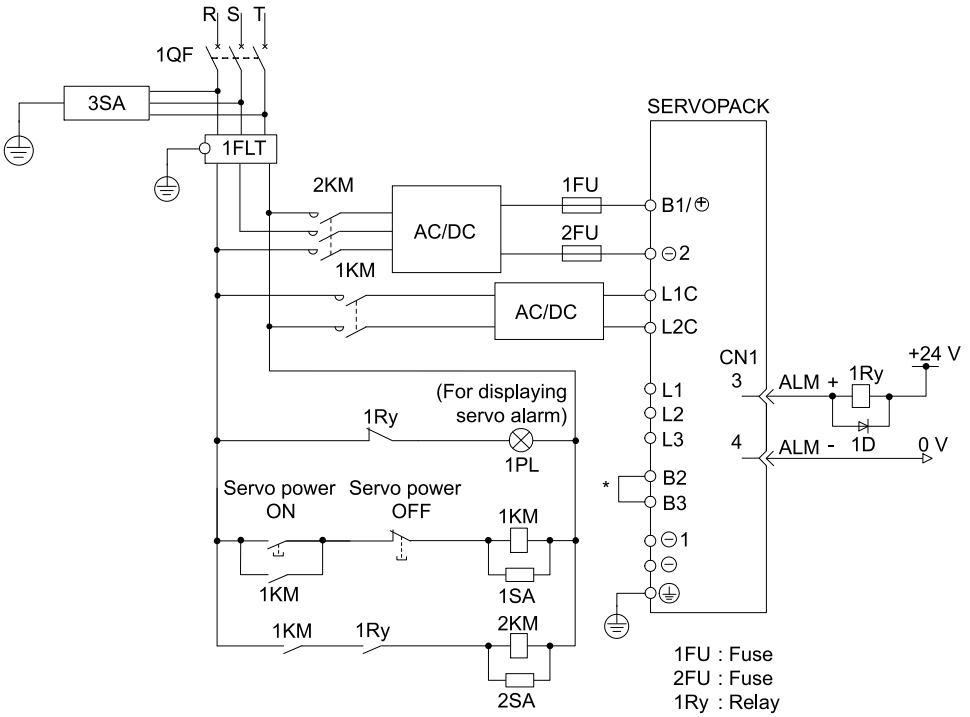

1FU : Fuse
2FU : Fuse
1Ry : Relay
1PL : Indicator lamp
1SA : Surge absorber
2SA : Surge absorber
3SA : Surge absorber
1D : Flywheel diode

1QF : Molded-case circuit breaker
1FLT : Noise filter
1KM : Magnetic contactor (for control power supply)
2KM : Magnetic contactor (for main circuit power supply)

*1 You do not have to connect B2 and B3 for the following models: SGDXS-R70A , -R90A , -1R6A , and -2R8A. Do not connect them.

(e) Wiring Example for 270-VDC Power Supply Input: SGDXS-330A, -470A, -550A, -590A, -780A

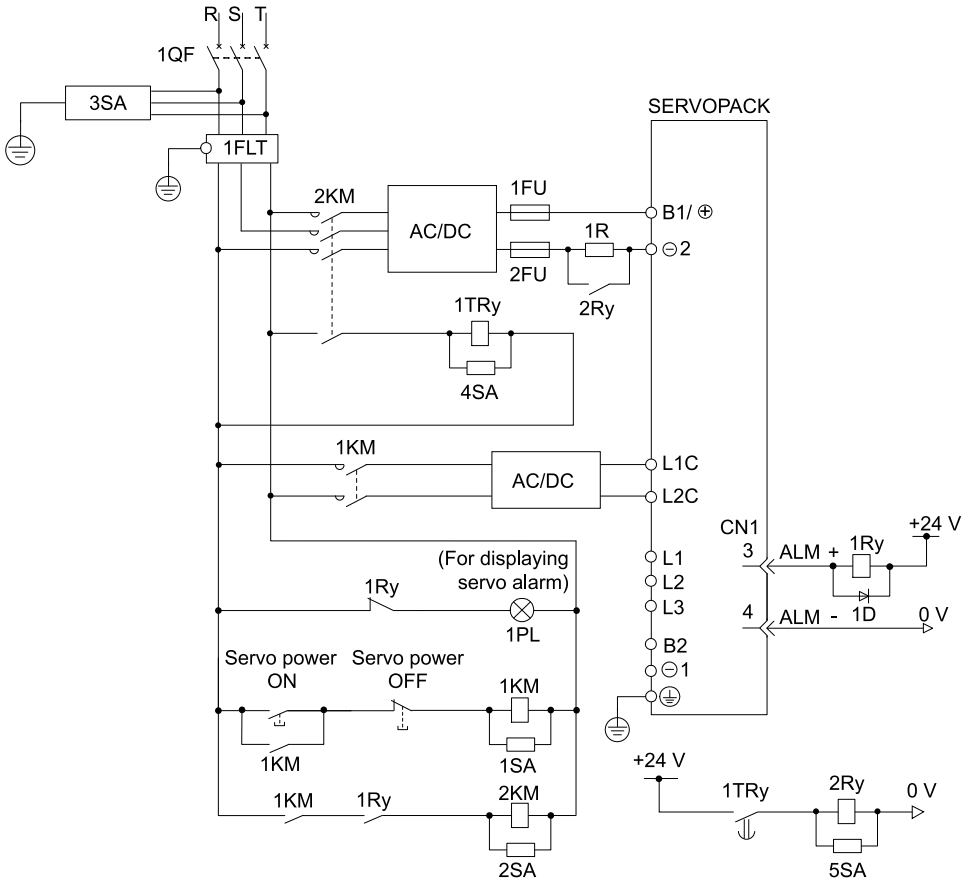

1QF : Molded-case circuit breaker
1FLT : Noise filter
1KM : Magnetic contactor (for control power supply)
2KM : Magnetic contactor (for main circuit power supply, auxiliary contact)
1FU : Fuse, positive side
2FU : Fuse, negative side
1Ry : Relay
2Ry : Relay (for inrush current suppression resistor short)
1TRy : Timer relay
1PL : Indicator lamp
1SA : Surge absorber
2SA : Surge absorber
3SA : Surge absorber
4SA : Surge absorber
5SA : Surge absorber
1D : Flywheel diode
1R : External inrush current suppression resistor

(f) Wiring Example for Three-Phase, 400-VAC Power Supply Input: SGDXS-1R9D, -3R5D, -5R4D, -8R4D, -120D, -170D

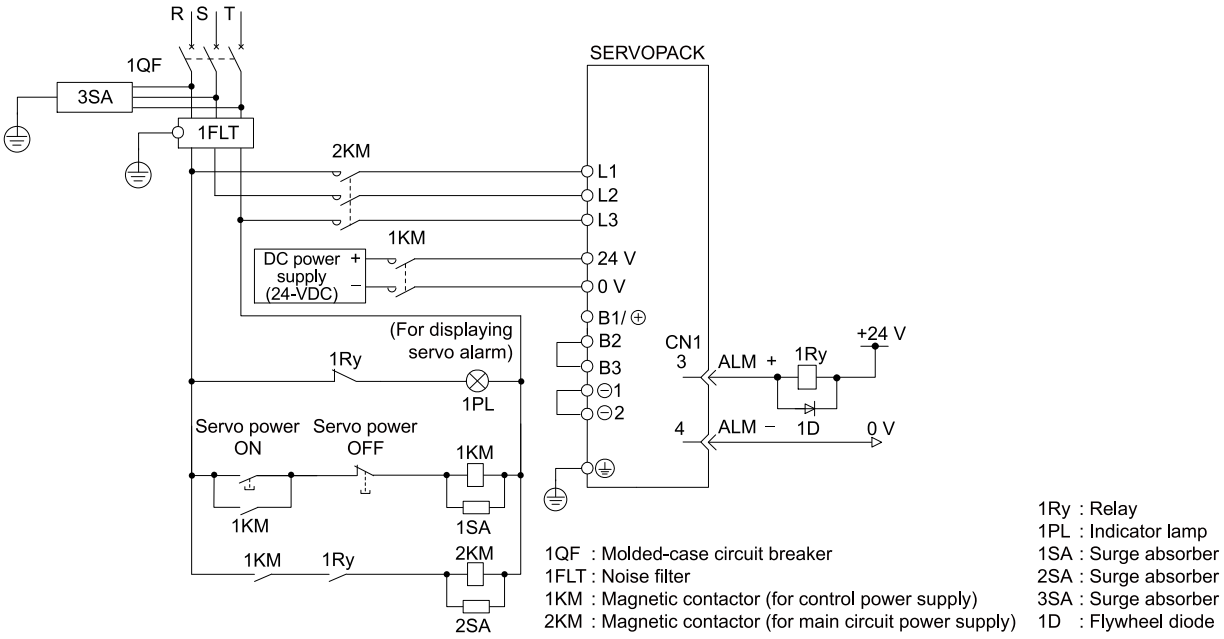

(g) Wiring Example for Three-Phase, 400 VAC Power Supply Input: SGDXS-210D, -260D, -280D, -370D

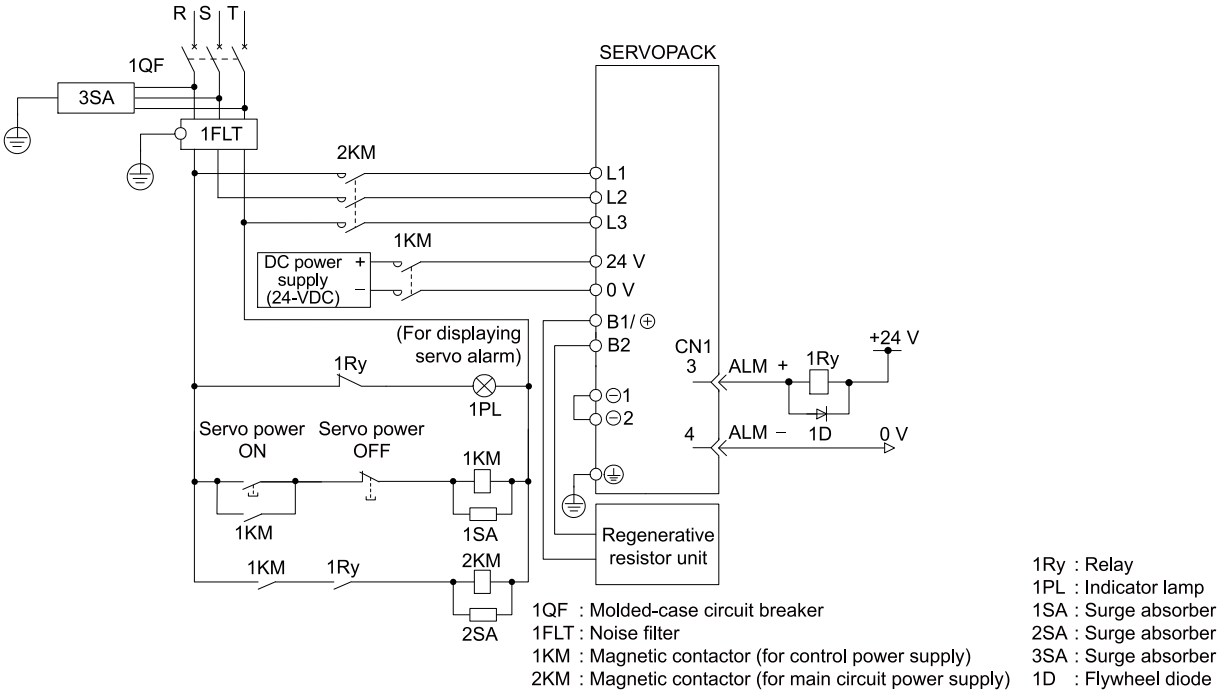

(h) Wiring Example for 540-VDC Power Supply Input: SGDXS-□□□D

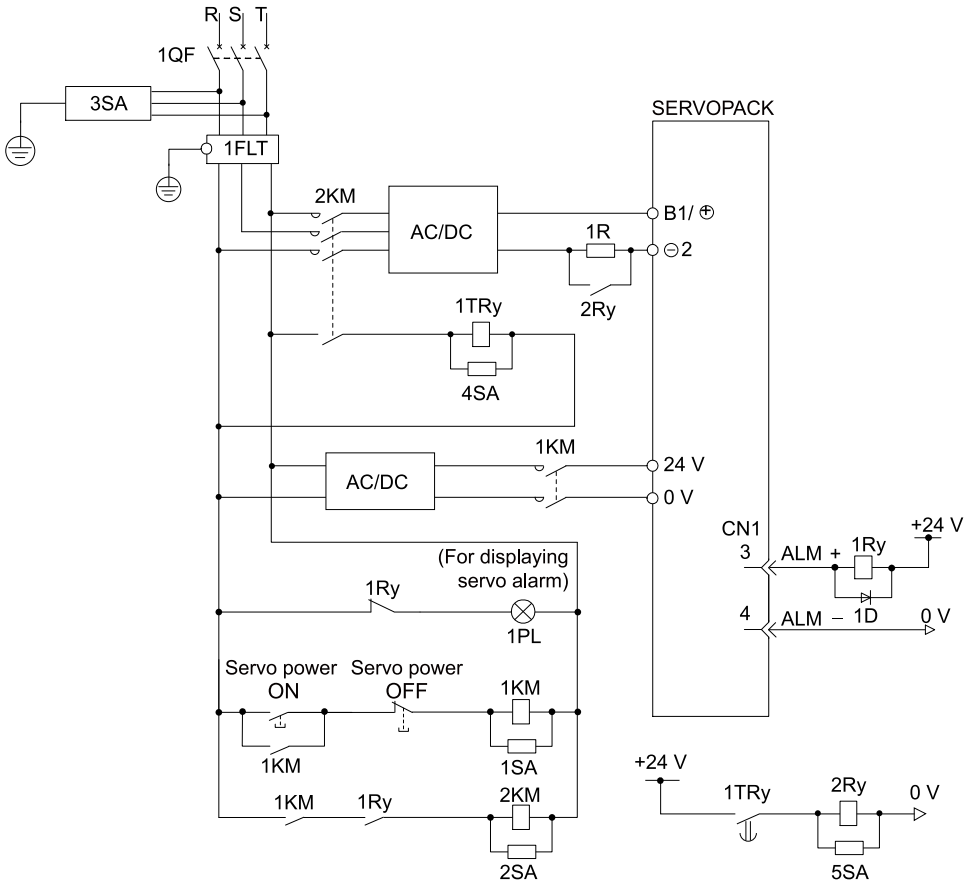

1QF : Molded-case circuit breaker
1FLT : Noise filter
1KM : Magnetic contactor (for control power supply)
2KM : Magnetic contactor (for main circuit power supply, auxiliary contact)
1Ry : Relay
2Ry : Relay (for inrush current suppression resistor short)
1TRy : Timer relay
1PL : Indicator lamp
1SA : Surge absorber
2SA : Surge absorber
3SA : Surge absorber
4SA : Surge absorber
5SA : Surge absorber
1D : Flywheel diode
1R : External inrush current suppression resistor

(2) Using More Than One SERVOPACK

Connect the ALM (Servo Alarm Output) signal for these SERVOPACKs in series to operate the alarm detection relay (1RY).

When a SERVOPACK alarm is activated, the ALM output signal transistor turns OFF.

The following diagram shows the wiring to stop all of the servomotors when there is an alarm for any one SERVOPACK.

More than one SERVOPACK can share a single noise filter. However, always select a noise filter that has a large enough capacity to handle the total power supply capacity of all the SERVOPACKs. Be sure to consider the load conditions.

To comply with UL/cUL standards, you must install a branch circuit protective device at the power supply input section to each SERVOPACK. Refer to the following manual for details.

Σ-X-Series Σ-XS/Σ-XW SERVOPACK Safety Precautions (Manual No.: TOMP C710812 00)

(a) Wiring Example for Three-Phase, 200-VAC Power Supply Input

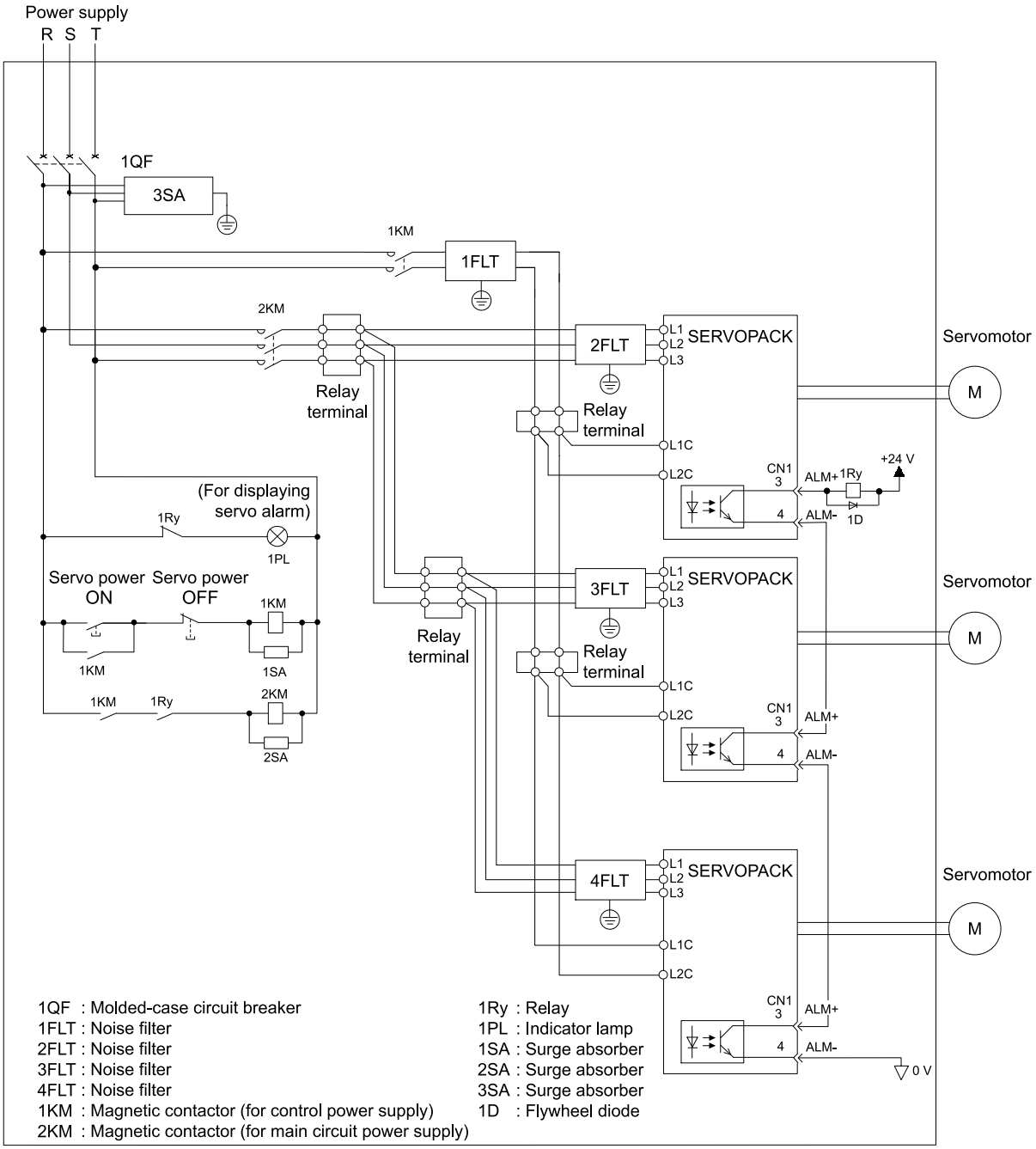

(b) Wiring Example for Three-Phase, 400-VAC Power Supply Input

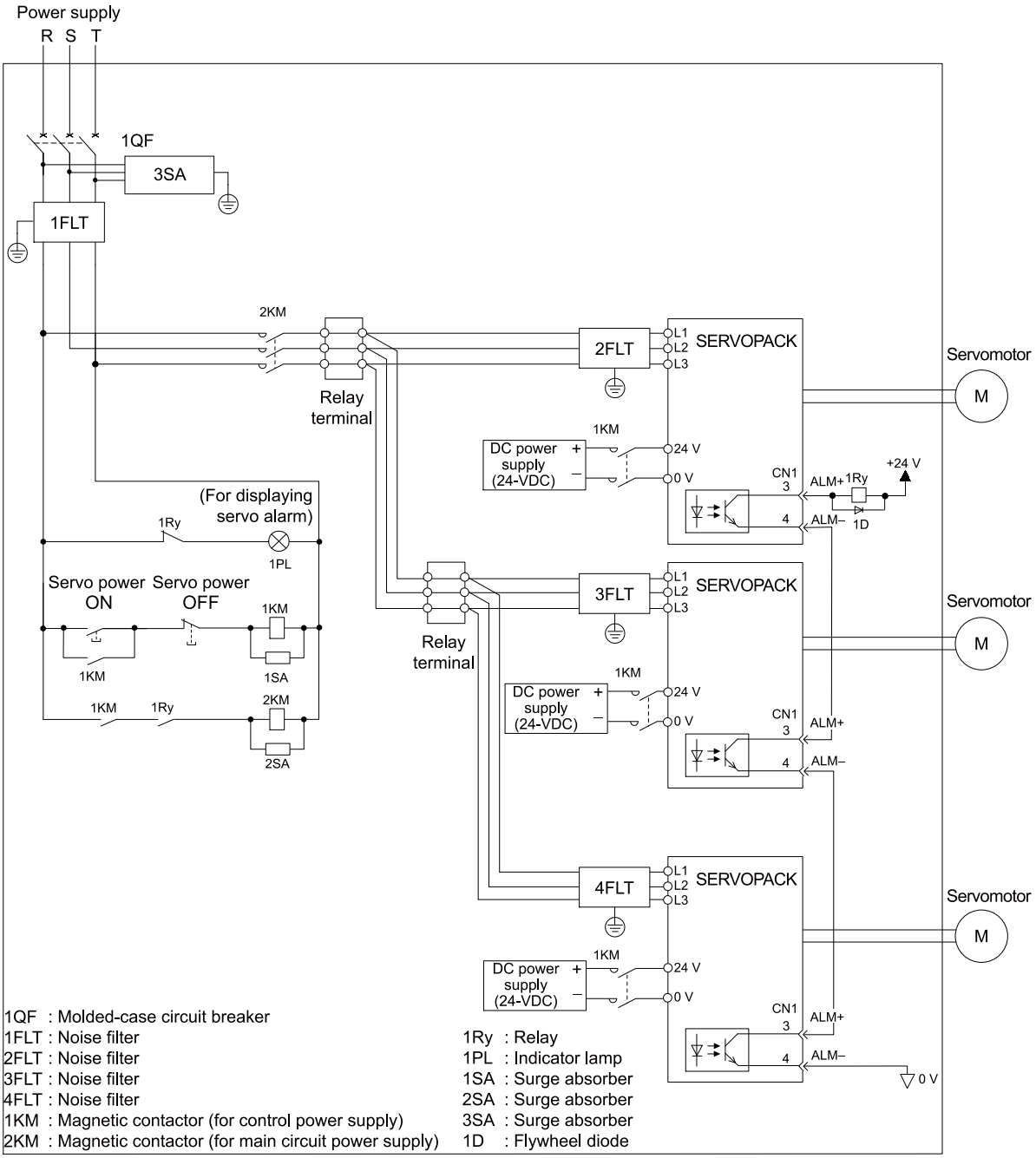

4.3.5 Wiring Regenerative Resistors

This section describes how to connect external regenerative resistors.

Refer to the following manual to select external regenerative resistors.

Σ-X-Series Peripheral Device Selection Manual (Manual No.: SIEP C710812 12)

⚠ WARNING

Be sure to wire regenerative resistors correctly. Do not connect B1/ ⊕and B2.

Doing so may result in fire or damage to the regenerative resistor or SERVOPACK.

(1) Connecting Regenerative Resistors

(a) SERVOPACK Models SGDXS-R70A, -R90A, -1R6A, and -2R8A,

1. **Connect the external regenerative resistor between the B1/⊕ and B2 terminals on the SERVOPACK.**

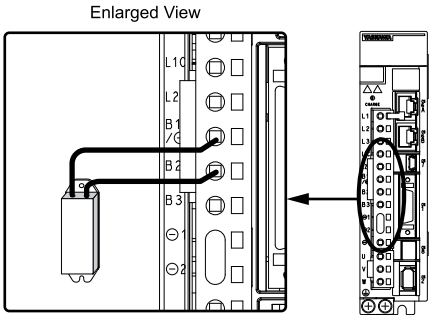

2. **Set Pn600 (Regenerative Resistor Capacity) and the Pn603 (Regenerative Resistance).**

   Refer to the following section for details on the settings.

   ☞ *5.17 Setting the Regenerative Resistor Capacity on page 223*

(b) SERVOPACK Models SGDXS-3R8A, -5R5A, -7R6A, -120A, -180A, -200A, -330A, -1R9D, -3R5D, -5R4D, -8R4D, -120D, and 170D

1. **Remove the jumper (lead or short bar) from between the B2 and B3 terminals on the SERVOPACK.**

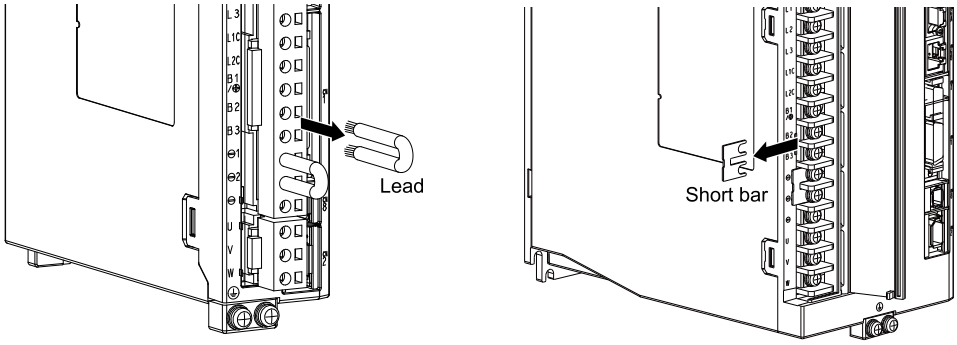

2. **Connect the external regenerative resistor between the B1/⊕ and B2 terminals.**

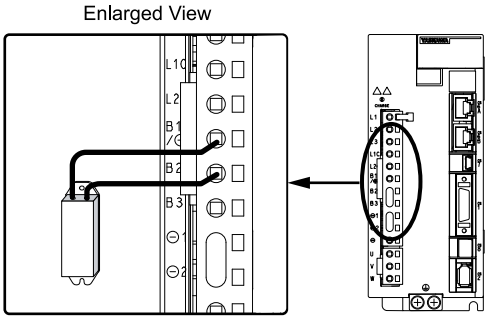

3. **Set Pn600 (Regenerative Resistor Capacity) and Pn603 (Regenerative Resistance).**

   Refer to the following section for details on the settings.

   ☞ *5.17 Setting the Regenerative Resistor Capacity on page 223*

(c) SERVOPACK Models SGDXS-470A, -550A, -590A, -780A, -210D, -260D, -280D, and -370D

1. **Connect the R1 and R2 terminals on the regenerative resistor unit to the B1/⊕ and B2 terminals on the SERVOPACK.**

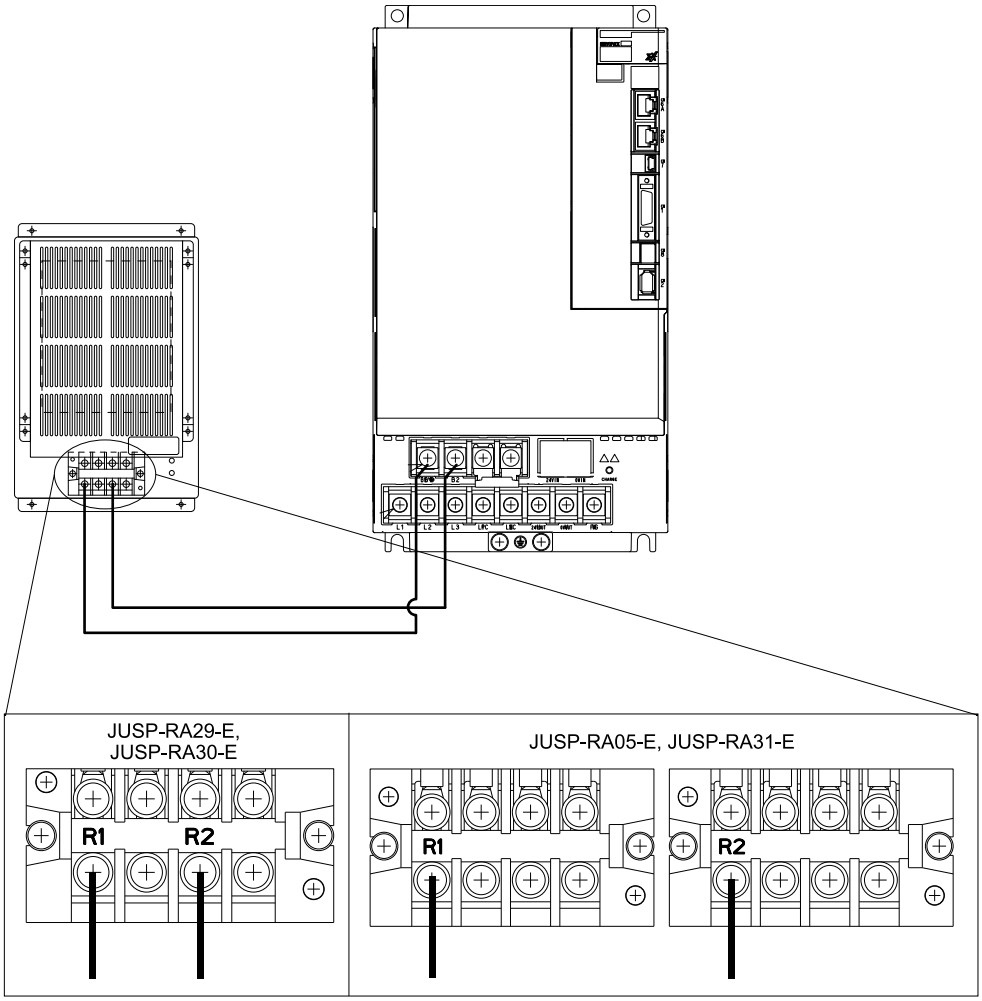

2. **Set Pn600 (Regenerative Resistor Capacity) and Pn603 (Regenerative Resistance) as required.**
   - When using the Yaskawa-recommended regenerative resistor unit, use the default settings for Pn600 and Pn603.
   - If you use any other external regenerative resistor, set Pn600 and Pn603 according to the specifications of the regenerative resistor.

   Refer to the following section for details on the settings.

   ☞ *5.17 Setting the Regenerative Resistor Capacity on page 223*

4.3.6 Wiring Reactors for Harmonic Suppression

You can connect a reactor for harmonic suppression to the SERVOPACK when harmonic suppression is required. Refer to the following manual for details on reactors for harmonic reactors.

📖 Σ-X-Series Peripheral Device Selection Manual (Manual No.: SIEP C710812 12)

Refer to the following figures to connect reactors.

<SERVOPACK with Three-Phase, 200-/400-VAC Power Supply Input>

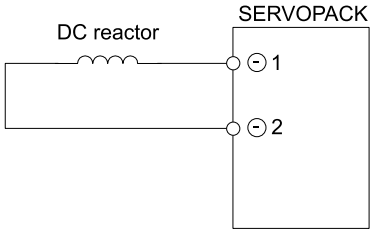

Note:

1. Connection terminals ⊖1 and ⊖2 for a DC reactor are connected when the SERVOPACK is shipped. Remove the lead wire and connect a DC reactor.
2. Reactors are optional products. (Purchase them separately.)

4.4 Wiring Servomotors

4.4.1 Terminal Symbols and Terminal Names

The SERVOPACK terminals or connectors that are required to connect the SERVOPACK to a servomotor are given below.

Terminal/Connector Symbols	Terminal/Connector Name	Remarks
U, V, W	Servomotor terminals	Refer to the following section for the wiring procedure. ☞ *4.3.2 Wiring Procedure for Main Circuit Connector on page 130*
⏚	Ground terminal	-
CN2	Encoder connector	-

4.4.2 Pin Layout of Connector for Encoder Cables (CN2)

(1) When Using a Rotary Servomotor

Pin No.	Signal	Function
1	PG5V	Encoder power +5 V
2	PG0V	Encoder power 0 V
3	BAT (+) *1	Battery for absolute encoder (+)
4	BAT (-) *1	Battery for absolute encoder (-)
5	PS	Serial data (+)
6	/PS	Serial data (–)
Shell	Shield	–

*1 No wiring is required for an incremental encoder or a batteryless absolute encoder.

(2) When Using a Direct Drive Servomotor

Pin No.	Signal	Function
1	PG5V	Encoder power +5 V
2	PG0V	Encoder power 0 V
3	–	– (Do not use.)
4	–	– (Do not use.)
5	PS	Serial data (+)
6	/PS	Serial data (–)
Shell	Shield	–

(3) When Using a Linear Servomotor

Pin No.	Signal	Function
1	PG5V	Linear encoder power supply +5 V
2	PG0V	Linear encoder power supply 0 V
3	–	– (Do not use.)
4	–	– (Do not use.)
5	PS	Serial data (+)
6	/PS	Serial data (–)
Shell	Shield	–

4.4.3 Wiring the SERVOPACK to the Encoder

(1) When Using an Absolute Encoder

If you use an absolute encoder but not a booster unit, use one of the following methods to wire the devices.

- Use the encoder cable included with the JUSP-BA01-E battery unit.
- Install a battery on the host controller.

If you use a booster unit and an absolute encoder, use the encoder cable included with the JUSP-BA01-E battery unit.

Refer to the following section for the battery replacement procedure.

☞ *16.1.3 Replacing the Battery on page 695*

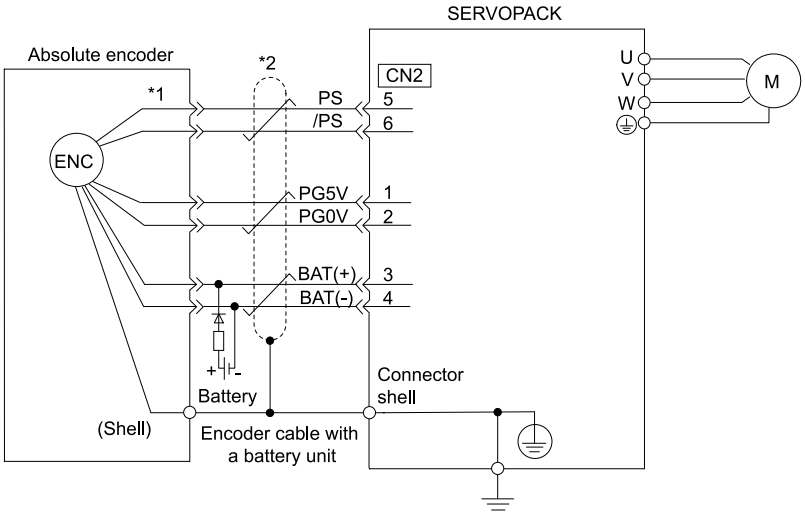

Figure 4.1 Wiring Example When Using an Encoder Cable with a Battery Unit

*1 The absolute encoder pin numbers for wiring the connector depend on the servomotor that you use.

*2 indicates shielded twisted-pair cable.

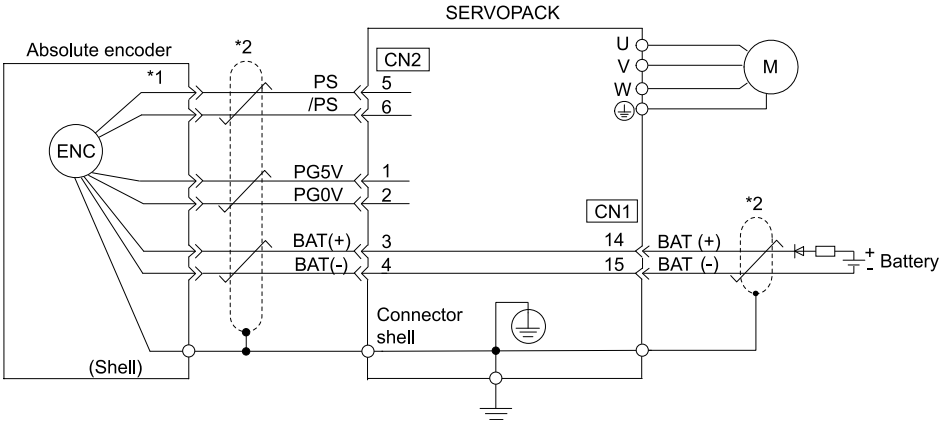

Figure 4.2 Wiring Example When Installing a Battery on the Host Controller

*1 The absolute encoder pin numbers for wiring the connector depend on the servomotor that you use.

*2 indicates shielded twisted-pair cable.

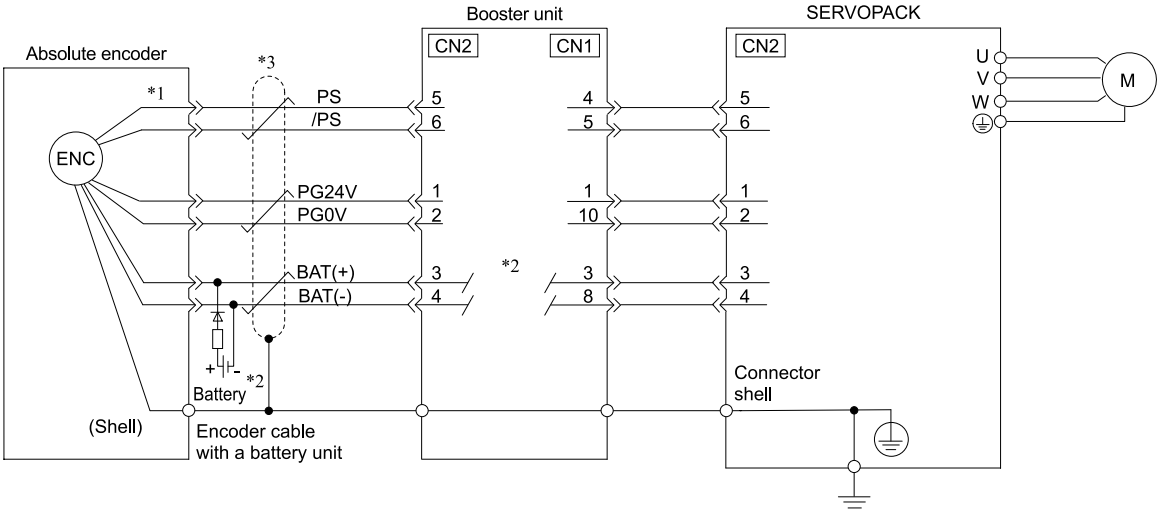

Figure 4.3 Wiring Example When Using a Booster Unit and Absolute Encoder

*1 The absolute encoder pin numbers for wiring the connector depend on the servomotor that you use.

*2 CN1-3 and CN2-3 as well as CN1-8 and CN2-4 on the booster unit are not connected internally. For this reason, connect the battery to the encoder as shown in the figure when you use a booster unit and an absolute encoder.

*3 indicates shielded twisted-pair cable.

Important

- When Installing a Battery on the Encoder Cable
  Use the encoder cable with a battery unit that is specified by Yaskawa.
  Refer to the following manual for details.
  Σ-X-Series Peripheral Device Selection Manual (Manual No.: SIEP C710812 12)
- When Installing a Battery on the Host Controller
  Insert a diode near the battery to prevent reverse current flow.
  <Circuit Example>
  Battery

Required Component Specifications

– Schottky Diode
  Reverse voltage: Vr ≧ 40 V
  Forward voltage: Vf ≦ 0.37 V
  Reverse current: Ir ≦ 5 μA
  Junction temperature: Tj ≧ 125°C

– Resistor
  Resistance: 22 Ω
  Tolerance: ±5% max.
  Rated power: 0.25 W min.

(2) When Using a Batteryless Absolute Encoder

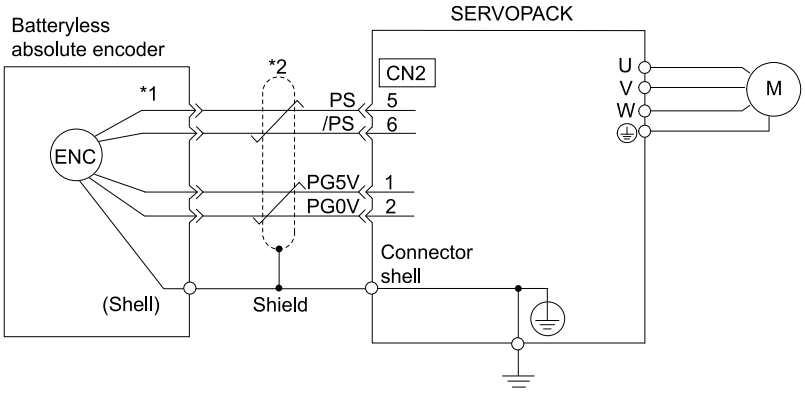

*1 The encoder pin numbers for wiring the connector depend on the servomotor that you use.

*2 represents a shielded twisted-pair cable.

(3) When Using an Absolute Linear Encoder

The wiring depends on the manufacturer of the linear encoder.

(a) Connections to Linear encoder from Dr. JOHANNES HEIDENHAIN GmbH

◆ LC115, LC415

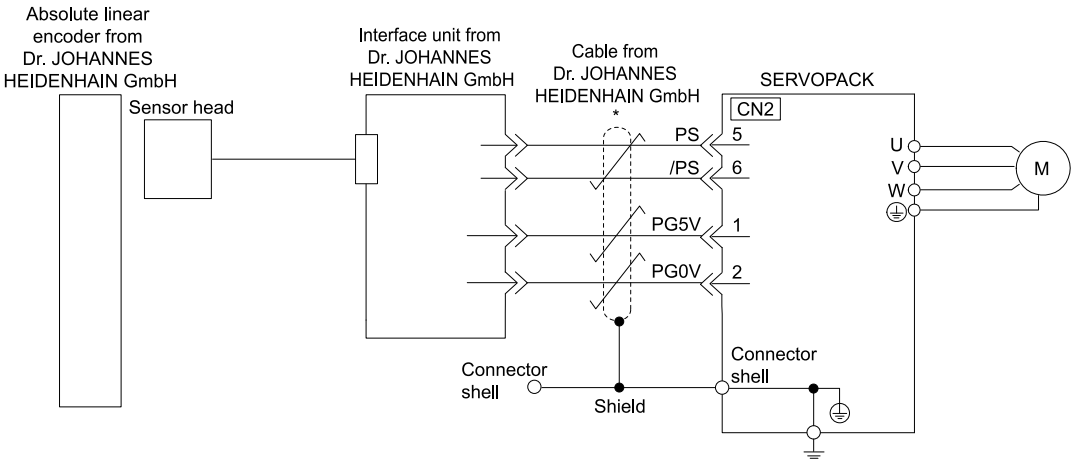

*1 represents a shielded twisted-pair cable.

◆ LIC4190 Series and LIC2190 Series

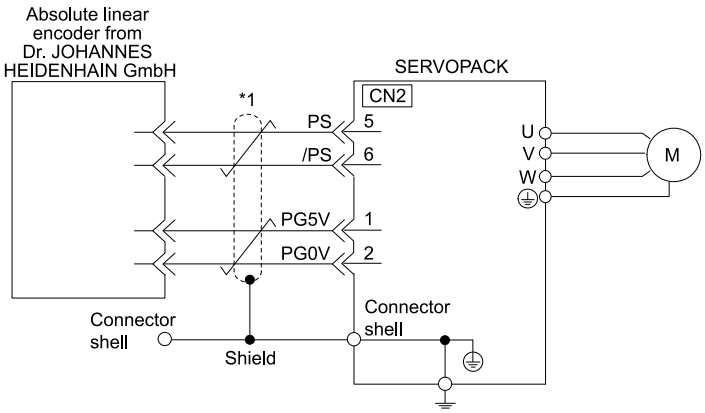

*1 represents a shielded twisted-pair cable.

(b) Connections to Linear Encoder from RSF Elektronik GmbH

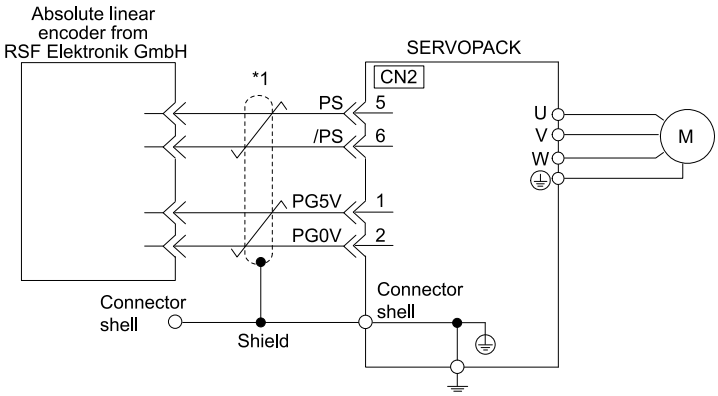

*1 represents a shielded twisted-pair cable.

(c) Connections to Absolute Linear Encoder from Mitutoyo Corporation

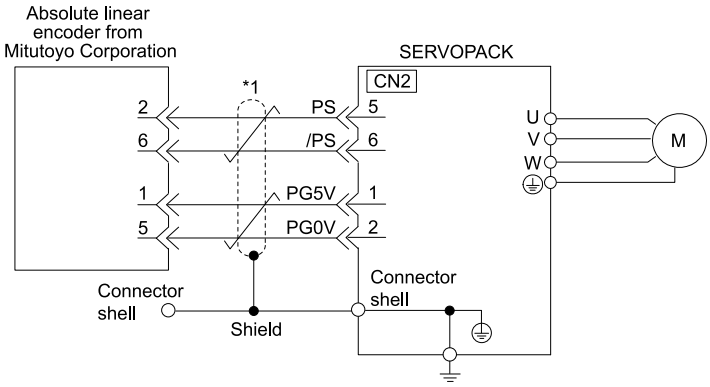

*1 represents a shielded twisted-pair cable.

(d) Connections to Absolute Linear Encoder from Renishaw PLC

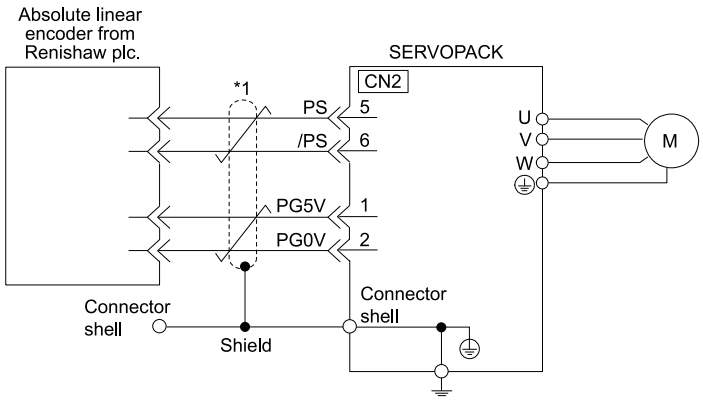

*1 represents a shielded twisted-pair cable.

(e) Connections to Linear Encoder from RLS d.o.o.

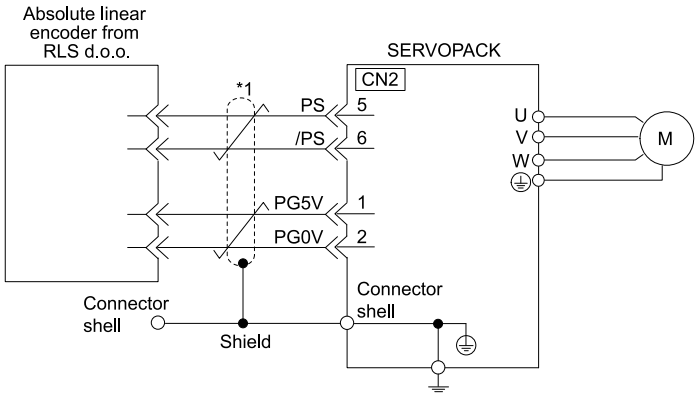

*1 represents a shielded twisted-pair cable.

(f) Connections to Absolute Linear Encoder from Magnescale Co., Ltd.

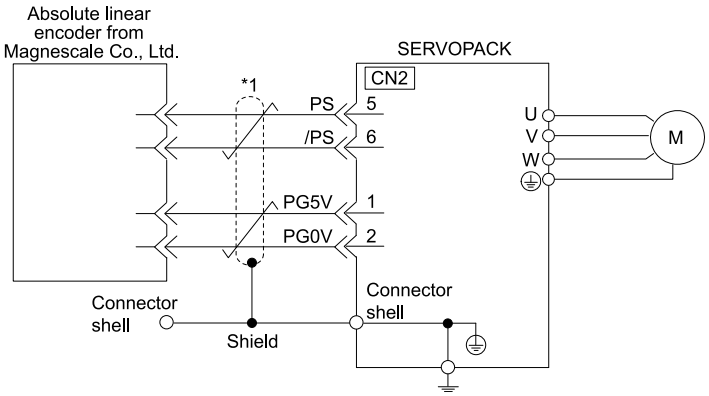

Figure 4.4 SR77, SR87, SQ47, and SQ57

*1 represents a shielded twisted-pair cable.

(g) Connections to Linear Encoder from Fagor Automation S. Coop.

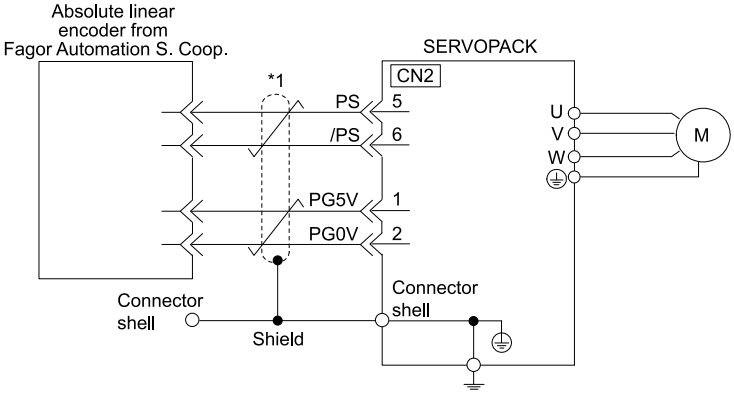

*1 represents a shielded twisted-pair cable.

(h) Connections to Absolute Linear Encoder from Canon Precision Inc.

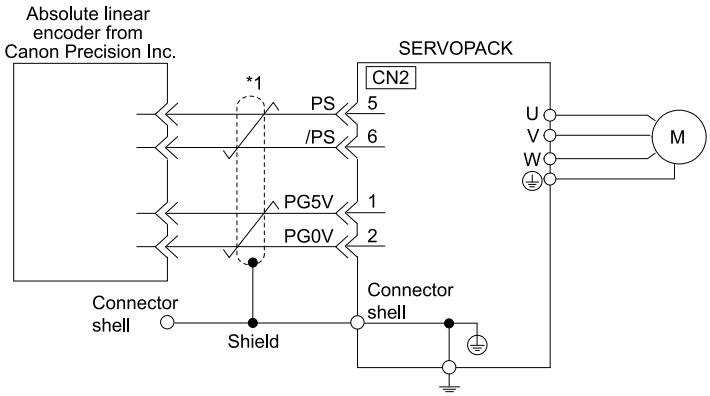

*1 represents a shielded twisted-pair cable.

(4) When Using an Incremental Linear Encoder

The wiring depends on the manufacturer of the linear encoder.

(a) Connections to Linear Encoder from Dr. JOHANNES HEIDENHAIN GmbH

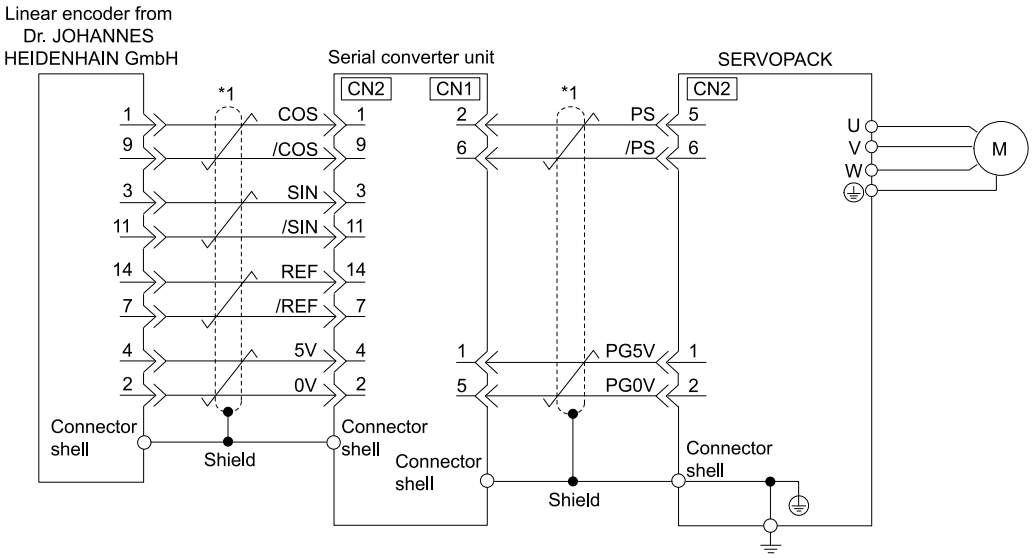

*1 represents a shielded twisted-pair cable.

(b) Connections to Linear Encoder from Renishaw PLC

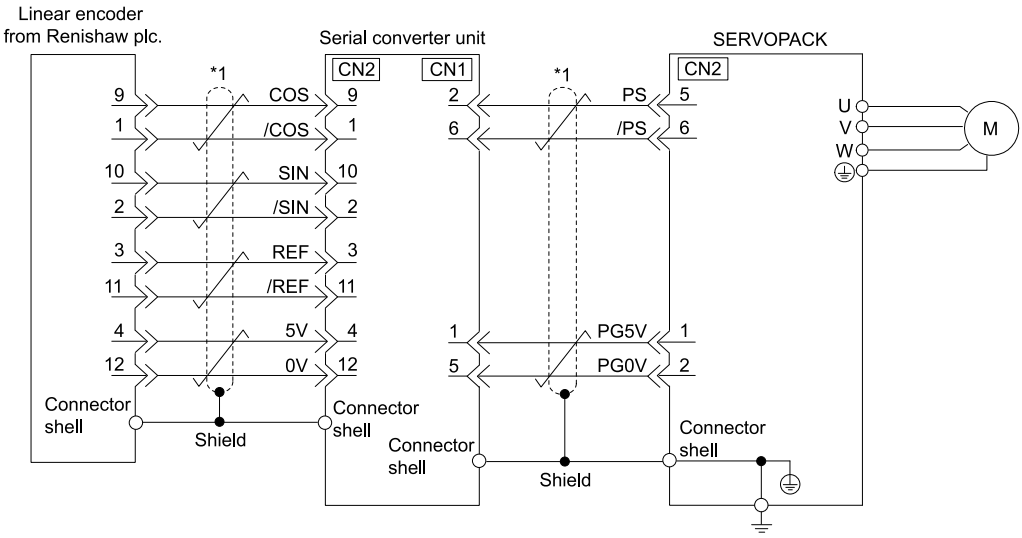

*1 represents a shielded twisted-pair cable.

(c) Connections to Linear Encoder from Magnescale Co., Ltd.

If you use a linear encoder from Magnescale Co., Ltd., the wiring will depend on the model of the linear encoder.

◆ SR75 and SR85

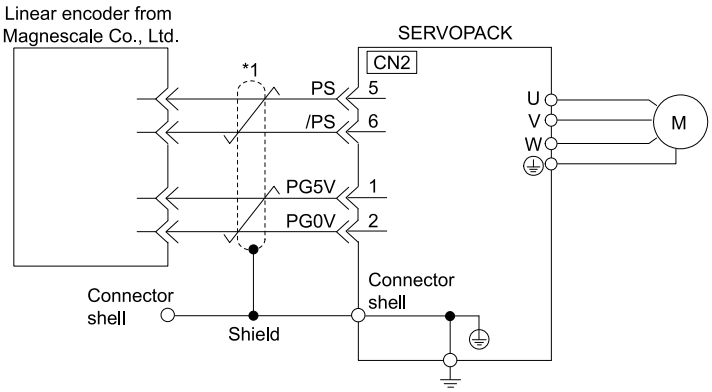

*1 represents a shielded twisted-pair cable.

◆ SL700, SL710, SL720, SL730, SQ10

- PL101-RY, MQ10-FLA, or MQ10-GLA Interpolator

The following table gives the linear encoder and interpolator combinations.

Linear Encoder Model	Interpolator Model
SL700, SL710, SL720, and SL730	PL101-RY *1
SQ10	MQ10-FLA *2
	MQ10-GLA *2

*1 This is the model of the sensor head with interpolator.
*2 This is the model of the interpolator.

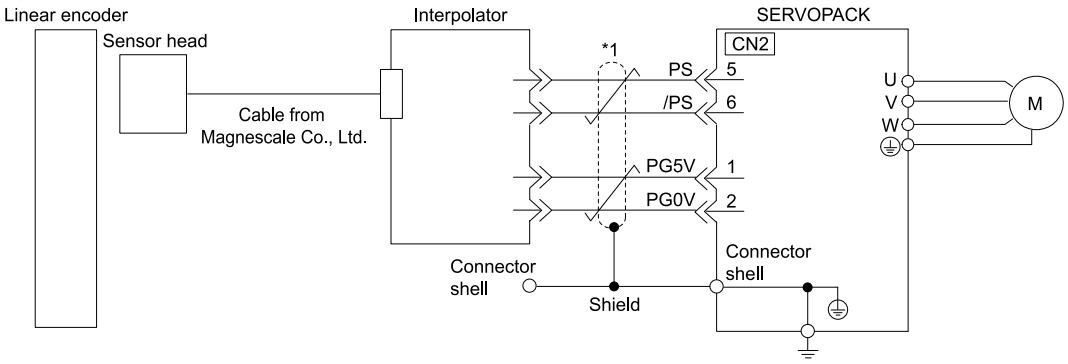

*1 represents a shielded twisted-pair cable.

◆ **SL700, SL710, SL720, and SL730**

- MJ620-T13 Interpolator

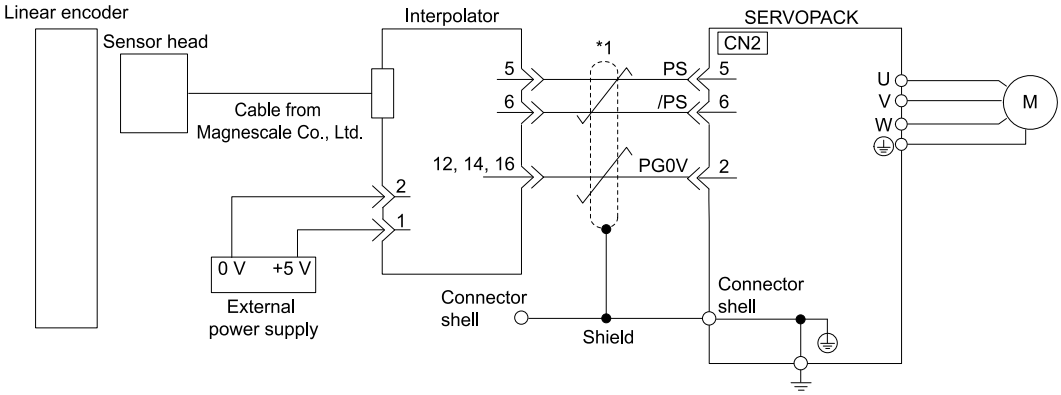

*1 represents a shielded twisted-pair cable.

(d) Connections to Linear Encoder from Canon Precision Inc.

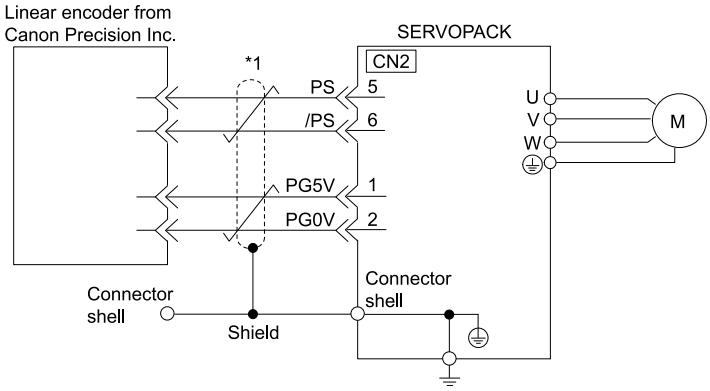

*1 represents a shielded twisted-pair cable.

4.4.4 Wiring the SERVOPACK to the Holding Brake

Important

- If you use a rotary servomotor, select a surge absorber according to the brake current and brake power supply. Refer to the relevant manual in the following list for details.

  Σ-X-series Peripheral Device Selection Manual (Manual No.: SIEP C710812 12)

- After the surge absorber is connected, check the brake operation delay time in your application. The surge absorber may affect the brake operation delay time.
  Configure the relay circuit to activate the holding brake for an emergency stop.
  < Relay Circuit Example **>**

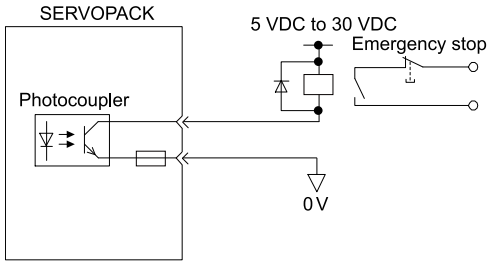

- You can change the output signal allocation of the /BK signal. Refer to the following section for details.
  5.11.2 /BK (Brake Output) Signal on page 201
- If you use a 24-V brake, install a separate power supply for the 24-VDC power supply from other power supplies, such as the one for the I/O signals of the CN1 connector. If the power supply is shared, the I/O signals may malfunction.

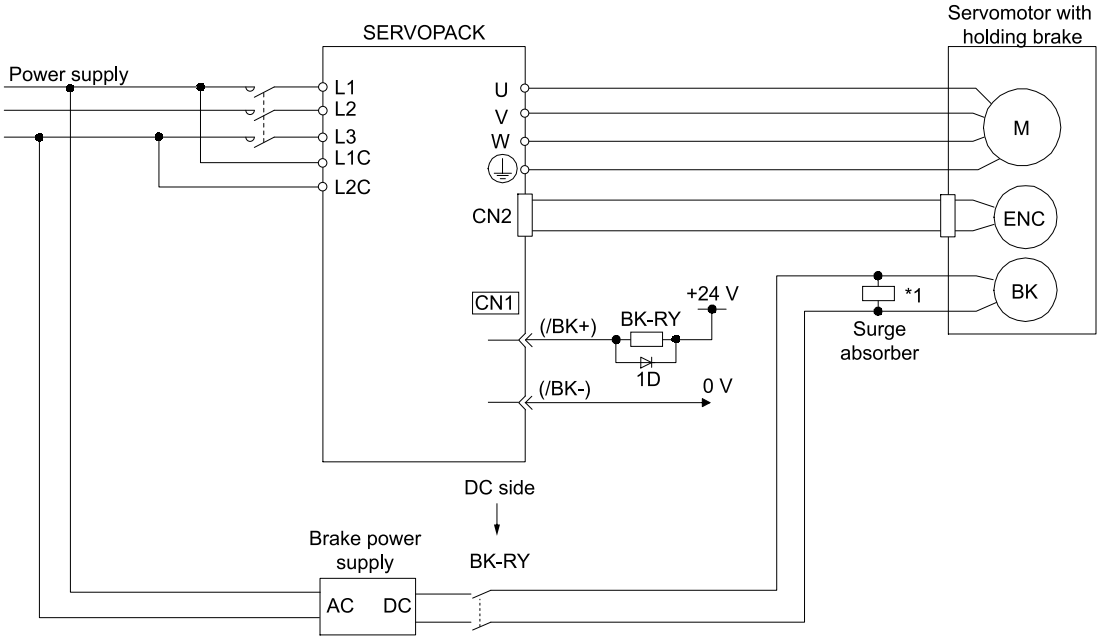

BK-RY: Brake control relay
1D: Flywheel diode

*1 Install the surge absorber near the brake terminals on the servomotor.

4.5 I/O Signal Connections

4.5.1 I/O Signal Connector (CN1) Names and Functions

The following table gives the pin numbers, names, and functions the I/O signal pins for the default settings.

(1) Input Signals

Default settings are given in parentheses.

Signal	Pin No.	Name	Function	Reference Page
/SI1 *1 (P-OT)	7	General-Purpose Sequence Input 1 (Forward Drive Prohibit Input)	You can allocate the input signal to use with a parameter. (Stops servomotor drive (to prevent overtravel) when the moving part of the machine exceeds the range of movement.)	194
/SI2 *1 (N-OT)	8	General-Purpose Sequence Input 2 (Reverse Drive Prohibit Input)		
/SI3 *1	9	General-Purpose Sequence Input 3	You can allocate the input signal to use with a parameter. (Used for general-purpose input.)	–
/SI4 *1 (/Probe1)	10	General-Purpose Sequence Input 4 (Probe 1 Latch Input)	You can allocate the input signal to use with a parameter. (Connect the external signals that latch the current feedback pulse counter.)	618, 685
/SI5 *1 (/Probe2)	11	General-Purpose Sequence Input 5 (Probe 2 Latch Input)		
/SI6 *1 (/Home)	12	General-Purpose Sequence Input 6 (Home Switch Input)	You can allocate the input signal to use with a parameter. (Connect the switch that starts homing.)	609, 672
/SI0 *1	13	General-Purpose Sequence Input 0	You can allocate the input signal to use with a parameter. (Used for general-purpose input.)	–
+24VIN	6	Sequence Input Signal Power Supply Input	Inputs the sequence input signal power supply. Allowable voltage range: 24 VDC ±20% The 24-VDC power supply is not provided by Yaskawa.	157
BAT+	14	Battery for Absolute Encoder (+)	These are the pins to connect the absolute encoder backup battery. **Note:** • Do not connect these pins if you use the encoder cable with a battery unit. • Do not connect these pins if you use a booster unit. Always use an encoder cable with a battery unit to connect the booster unit and absolute encoder.	143
BAT-	15	Battery for Absolute Encoder (-)		
TH	5	Overheat Protection Input	Inputs the overheat protection signal from a linear servomotor or from a sensor attached to the machine.	286

*1 You can change the allocations. Refer to the following section for details.
☞ *6.1.3 Input Signal Allocations on page 232*

Note:

If forward drive prohibition or reverse drive prohibition is used, the SERVOPACK is stopped by software controls. If the application does not satisfy the safety requirements, add external safety circuits as required.

(2) Output Signals

Default settings are given in parentheses.

Signal	Pin No.	Name	Function	Reference Page
ALM+	3	Servo Alarm Output	Turns OFF (opens) when an error is detected.	236
ALM-	4			
/SO1+ (/BK+)	1	General-Purpose Sequence Output 1 (Brake Output) *1, *2	You can allocate the output signal to use with a parameter. (Controls the brake. The brake is released when the signal turns ON (closes).)	201
/SO1- (/BK-)	2			
/SO2+	23	General-Purpose Sequence Output 2 *1, *2	Used for general-purpose outputs. Set the parameters to allocate functions.	688
/SO2-	24			
/SO3+	25	General-Purpose Sequence Output 3 *1, *2		
/SO3-	26			
PAO	17	Encoder Divided Pulse Output, Phase A *3	Output the encoder divided pulse output signals with a 90° phase differential.	261, 270
/PAO	18			
PBO	19	Encoder Divided Pulse Output, Phase B *3		
/PBO	20			
PCO	21	Encoder Divided Pulse Output, Phase C *3	Output the encoder origin signal.	
/PCO	22			
SG	16	Signal Ground	This is the 0-V signal for the control circuits.	–
FG	Shell	Frame Ground	Connected to the frame ground if the shield of the I/O signal cable is connected to the connector shell.	–

*1 You can change the allocations. Refer to the following section for details.
☞ *6.1.4 Output Signal Allocations on page 234*

*2 When triggers at preset positions is enabled, the normal outputs for triggers at preset positions are used. The output signals for triggers at preset positions are output using logical OR. This allows other output signals to also be allocated to the same terminals. Refer to the following section for details on the selections of triggers at preset positions.
☞ *(a) Triggers at Preset Positions Function Selection on page 292*

*3 When triggers at preset positions is enabled, the high-speed outputs for triggers at preset positions are used. In this case, encoder divided pulses are not output. Refer to the following section for details on the selections of triggers at preset positions.
☞ *(a) Triggers at Preset Positions Function Selection on page 292*

4.5.2 I/O Signal Connector (CN1) Pin Layout

The following figure gives the pin layout of the I/O signal connector (CN1) for the default settings.

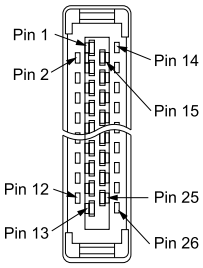

The illustration to the left and the following table are from the direction of the following arrow without the connector shell attached.

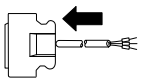

2	/SO1- (/BK-)	General-Purpose Sequence Output 1	1	/SO1+ (/BK+)	General-Purpose Sequence Output 1	15	BAT-	Battery for Absolute Encoder (-)	14	BAT+	Battery for Absolute Encoder (+)
4	ALM-	Servo Alarm Output	3	ALM+	Servo Alarm Output	17	PAO	Encoder Divided Pulse Output, Phase A	16	SG	Signal Ground
6	+24VIN	Sequence Input Signal Power Supply Input	5	TH	Overheat Protection Input	19	PBO	Encoder Divided Pulse Output, Phase B	18	/PAO	Encoder Divided Pulse Output, Phase A
8	/SI2 (N-OT)	General-Purpose Sequence Input 2	7	/SI1 (P-OT)	General-Purpose Sequence Input 1	21	PCO	Encoder Divided Pulse Output, Phase C	20	/PBO	Encoder Divided Pulse Output, Phase B
10	/SI4 (/Probe1)	General-Purpose Sequence Input 4	9	/SI3	General-Purpose Sequence Input 3	23	/SO2+	General-Purpose Sequence Output 2	22	/PCO	Encoder Divided Pulse Output, Phase C
12	/SI6 (/Home)	General-Purpose Sequence Input 6	11	/SI5 (/Probe2)	General-Purpose Sequence Input 5	25	/SO3+	General-Purpose Sequence Output 3	24	/SO2-	General-Purpose Sequence Output 2
–	–	–	13	/SI0	General-Purpose Sequence Input 0	–	–	–	26	/SO3-	General-Purpose Sequence Output 3

Note:

When using triggers at preset positions, the signals for CN1-17 to CN1-22 differ from those listed above. Refer to the following section for details.

☞ *6.15.2 I/O Signal Connector (CN1) Pin Layout on page 290*

4.5.3 I/O Signal Wiring Examples

(1) When Using a Rotary Servomotor

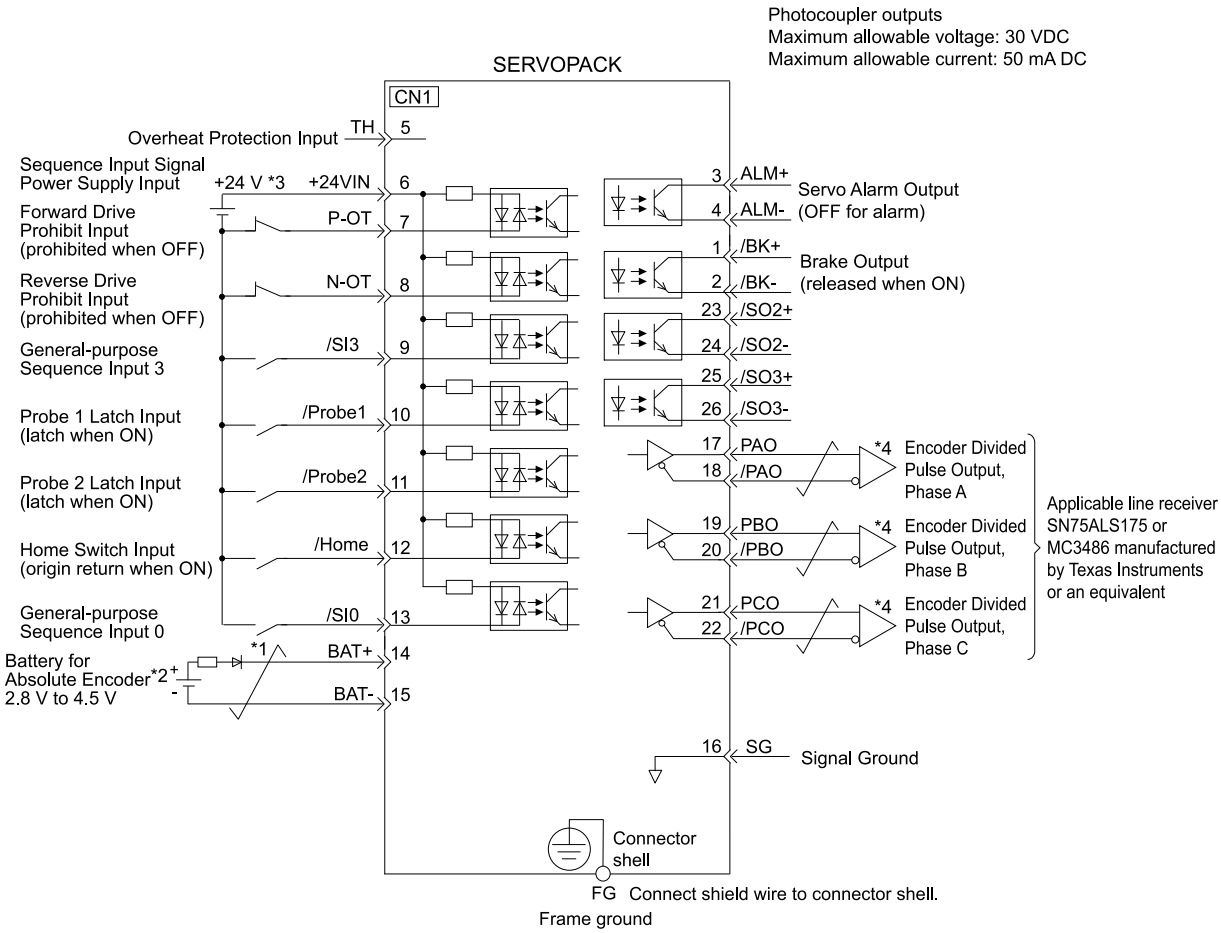

*1 represents twisted-pair wires.
*2 Connect these when using an absolute encoder. If the encoder cable with a battery unit is connected, do not connect a backup battery.
*3 The 24-VDC power supply is not provided by Yaskawa. Use a 24-VDC power supply with double insulation or reinforced insulation.
*4 Always use line receivers to receive the output signals.

Note:

1. You can use parameters to change the functions allocated to the /SI0, /SI3, P-OT, N-OT, /Probe1, /Probe2, and /Home input signals and the /SO1, /SO2, and /SO3 output signals. Refer to the following section for details.
   ☞ *6.1 Changing Allocations of I/O Signals on page 230*
2. If you use a 24-V brake, install a separate power supply for the 24-VDC power supply from other power supplies, such as the one for the I/O signals of the CN1 connector. If the power supply is shared, the I/O signals may malfunction.

(2) When Using a Linear Servomotor

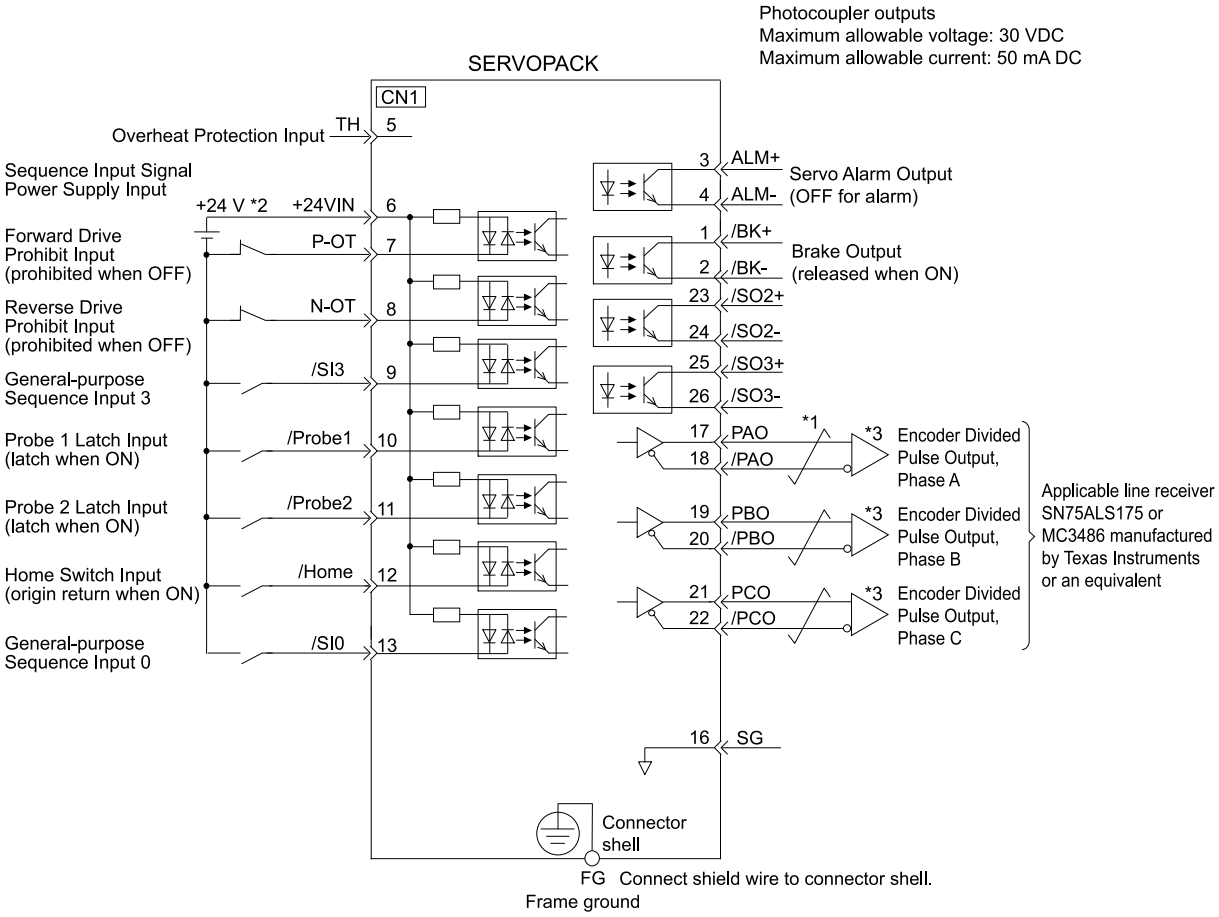

*1 represents twisted-pair wires.
*2 The 24-VDC power supply is not provided by Yaskawa. Use a 24-VDC power supply with double insulation or reinforced insulation.
*3 Always use line receivers to receive the output signals.

Note:

1. You can use parameters to change the functions allocated to the /SI0, /SI3, P-OT, N-OT, /Probe1, /Probe2, and /Home input signals and the /SO1, /SO2, and /SO3 output signals. Refer to the following section for details.
   ☞ *6.1 Changing Allocations of I/O Signals on page 230*
2. If you use a 24-V brake, install a separate power supply for the 24-VDC power supply from other power supplies, such as the one for the I/O signals of the CN1 connector. If the power supply is shared, the I/O signals may malfunction.

4.5.4 I/O Circuits

(1) Sequence Input Circuits

(a) Photocoupler Input Circuits

This section describes CN1 connector terminals 6 to 13.

Examples for Relay Circuits	Examples for Open-Collector Circuits
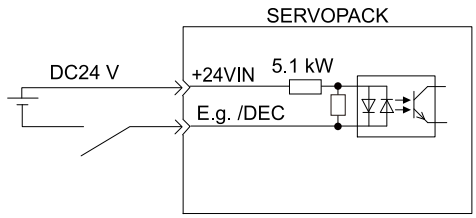	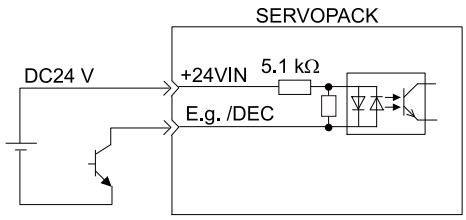

Note:

For the external power supply (24 VDC), use a power supply with a capacity of 50 mA or higher.

The SERVOPACK input circuits use bidirectional photocouplers. Select either a sink circuit or source circuit according to the specifications required by the machine.

Note:

The connection examples in *4.5.3 I/O Signal Wiring Examples on page 156* are for sink circuit connections.

Sink Circuits		Source Circuits	
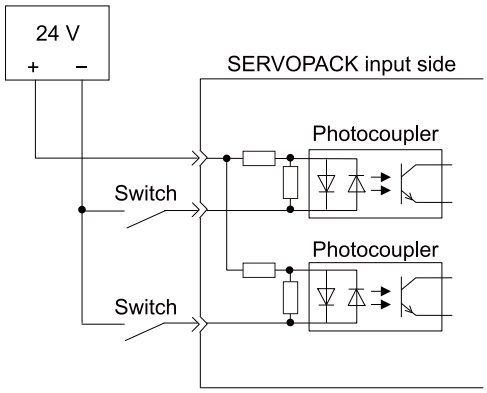		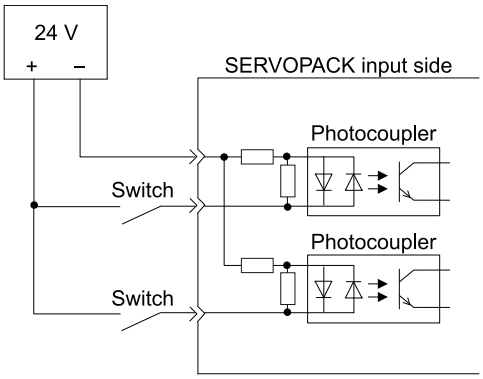	
Input signal status		Input signal status	
Switch	Photocoupler	Switch	Photocoupler
Close	ON	Close	ON
Open	OFF	Open	OFF

(2) Sequence Output Circuits

> **Important**
>
> Incorrect wiring or incorrect voltage application to the output circuits may cause short-circuit failures.
>
> If a short-circuit failure occurs as a result of any of these causes, the holding brake will not work. This could damage the machine or cause an accident that may result in death or injury.

(a) Photocoupler Output Circuits

Photocoupler output circuits are used for the ALM (Servo Alarm Output), /S-RDY (Servo Ready Output), and other sequence output signals. Connect a photocoupler output circuit to a relay or line-receiver circuit.

Examples for Relay Circuits	Example for Line Receiver Circuit
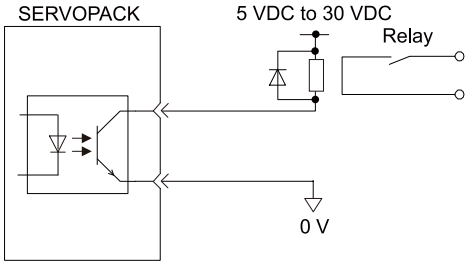	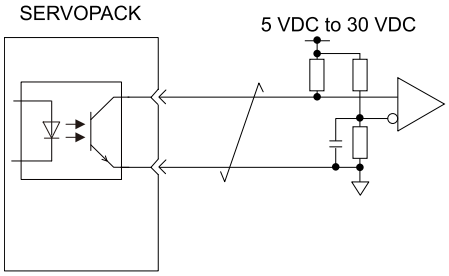

Note:

The maximum allowable voltage and current range for photocoupler output circuits are as follows:

- Maximum allowable voltage: 30 VDC
- Current range: 5 mA to 50 mA DC

(b) Line-Driver Output Circuits

This section describes CN1 connector terminals 17-18 (Phase-A signal), 19-20 (Phase-B signal), and 21-22 (Phase-C signal).

The serial data from the encoder is converted to two-phase (phases A and B) pulses. The resulting output signals (PAO, /PAO, PBO, and /PBO), encoder phase C output signals (PCO and /PCO) are output with line-driver output circuits. Connect the line-driver output circuits to line-receiver circuits at the host controller.

<Example for Line-Receiver Circuit>

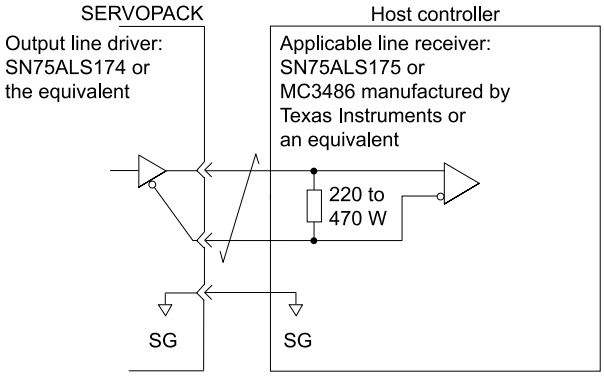
SERVOPACK
Output line driver:
SN75ALS174 or
the equivalent
Host controller
Applicable line receiver:
SN75ALS175 or
MC3486 manufactured by
Texas Instruments or
an equivalent
220 to
470 W
SG
SG

4.6 Connecting Safety Function Signals

This section describes the wiring required to use a safety function.

Refer to the following chapter for details on the safety function.

☞ *12 Safety Functions on page 567*

4.6.1 Pin Layout of Safety Function Signals (CN8)

Pin No.	Signal	Name	Function
1	–	– (Do not use these pins because they are connected to internal circuits.)	
2	–		
3	/HWBB1-	Hard Wire Base Block Input 1	For a hard wire base block input. The base block (motor power turned OFF) is in effect when the signal is OFF.
4	/HWBB1+		
5	/HWBB2-	Hard Wire Base Block Input 2	
6	/HWBB2+		
7	EDM1-	External Device Monitor Output	Turns ON when the /HWBB1 and the / HWBB2 signals are input and the SERVOPACK enters a base block state.
8	EDM1+		

Whether or not you use the EDM1 signal does not affect the performance level of safety parameters.

4.6.2 I/O Circuits

Important

For Safety Function signal connections, the input signal is the 0-V common and the output signal is a source output. This is opposite to other signals described in this manual. To avoid confusion, the ON and OFF status of signals for the Safety Function are defined as follows:

ON: The state in which the relay contacts are closed or the transistor is ON and current flows into the signal line.

OFF: The state in which the relay contacts are open or the transistor is OFF and no current flows into the signal line.

(1) Safety Input Circuits

Use a 0-V common to connect the Safety Function signals. You must connect redundant input signals.

< Input Signal Connection Example **>**

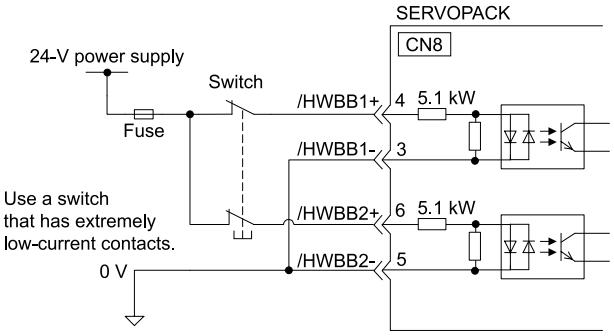

(a) Input (HWBB) Signal Specifications

Type	Signal	Connector Pin No.	Status	Meaning
Input	/HWBB1	CN8-4 CN8-3	ON (closed)	Does not activate the HWBB (normal operation).
			OFF (open)	Activates the HWBB (motor current interruption request).
	/HWBB2	CN8-6 CN8-5	ON (closed)	Does not activate the HWBB (normal operation).
			OFF (open)	Activates the HWBB (motor current interruption request).

The input (HWBB) signals have the following electrical characteristics.

Item	Characteristics	Remarks
Internal Impedance	5.1 kΩ	–
Allowable Voltage Range	+24 V± 20%	For the 24-V power supply, use an SELV power supply.
Response Time	4 ms	Time from /HWBB1 and /HWBB2 signals turning OFF until HWBB is activated

(2) Diagnostic Output Circuits

The EDM1 output signal uses a source circuit. The following figure shows a connection example.

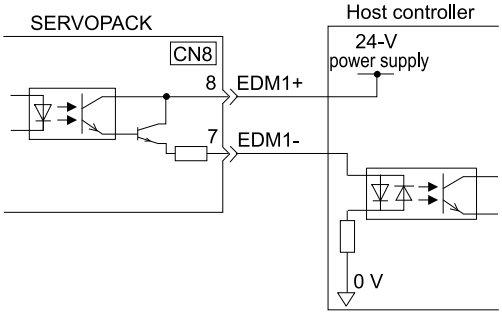

(a) EDM1 Output Signal Specifications

Type	Signal	Connector Pin No.	Status	Meaning
Output	EDM1	CN8-8 CN8-7	ON	Both the /HWBB1 and /HWBB2 signals are operating normally.
			OFF	The /HWBB1 signal, the /HWBB2 signal, or both are not operating.

The electrical characteristics of the EDM1 signal are as follows:

Item	Characteristics	Remarks
Maximum Allowable Voltage	30 VDC	–
Maximum Allowable Current	50 mA DC	–
Maximum ON Voltage Drop	1.0 V	Voltage between EDM1+ and EDM1- when current is 50 mA
Response Time	4 ms	Time from a change in /HWBB1 or /HWBB2 until a change in EDM1

4.7 Connecting EtherCAT Communications Cables

Connect the EtherCAT communications cables to the CN6A and CN6B connectors.

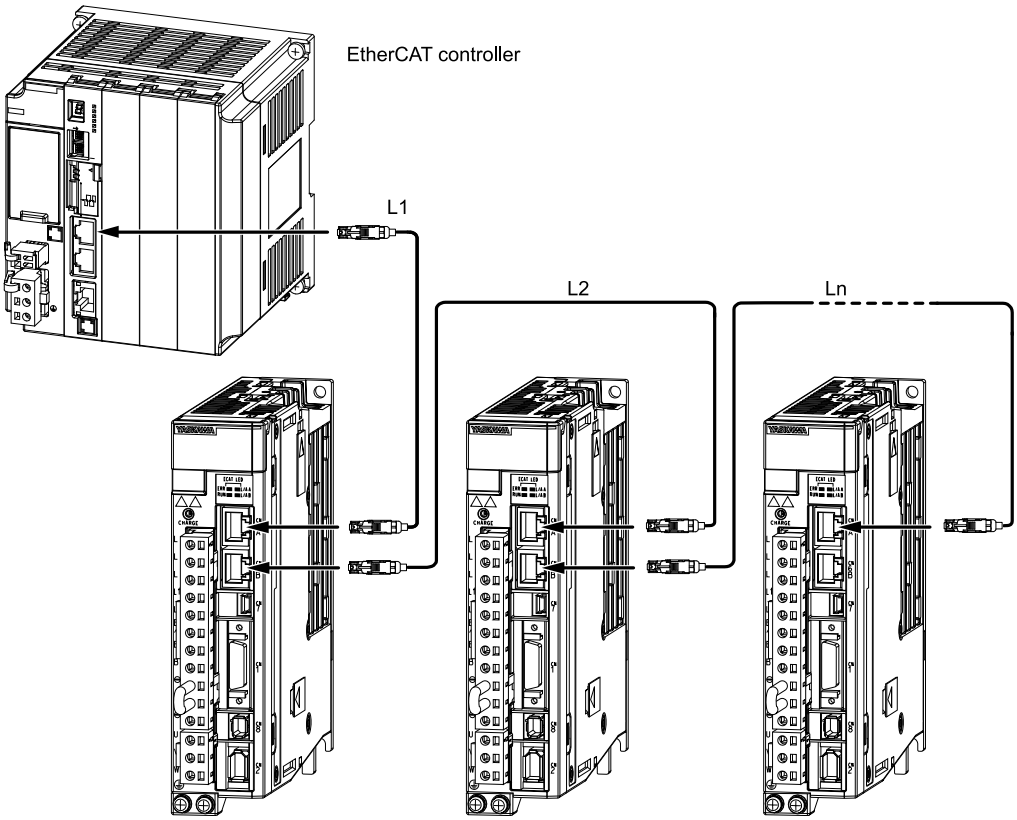

Note:

The length of the cable between stations (L1, L2, ... Ln) be 50 m or less.

4.8 Connecting the SigmaWin+

To connect a computer on which the SigmaWin+ is installed, connect CN7 on the SERVOPACK.

> **Important**
> Use the Yaskawa-specified cables. Operation will not be dependable due to low noise resistance with any other cable.

Refer to the following manual for the operating procedures for the SigmaWin+.

Engineering Tool SigmaWin+ Operation Manual (Manual No.: SIET S800001 34)

4.9 Connecting a Digital Operator

To use a digital operator, connect CN7 on the SERVOPACK.

Refer to the following manual for the operating procedures for the digital operator.

Σ-7-/Σ-X-Series Digital Operator Operating Manual (Manual No.: SIEP S800001 33)

4.10 Using the Analog Monitors

To use an analog monitor, connect CN5 on the SERVOPACK.

- Wiring Example

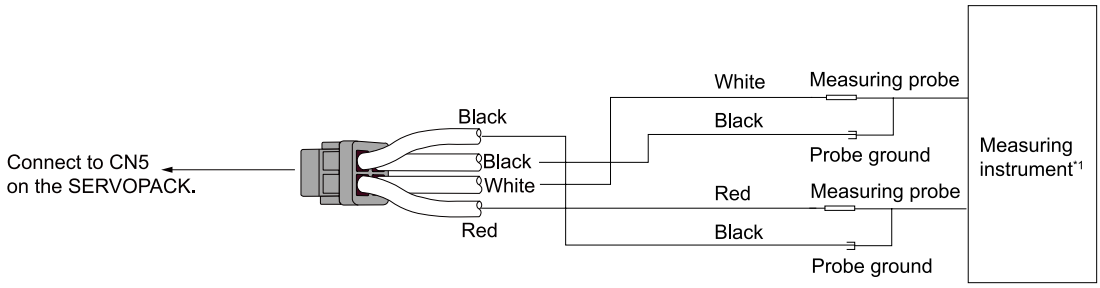

*1 The measuring instrument is not provided by Yaskawa.

Refer to the following section for information on the monitoring methods for an analog monitor.

☞ *9.3 Monitoring Machine Operation Status and Signal Waveforms on page 506*

5

Basic Functions That Require Setting before Operation

Describes the basic functions that must be set before you start servo system operation. It also describes the setting methods.

5.1 Manipulating SERVOPACK Parameters (Pn□□□) 170
5.1.1 Classifications of SERVOPACK Parameters 170
5.1.2 Notation for Parameters 170
5.1.3 Setting Methods for SERVOPACK Parameters 172
5.1.4 Write Prohibition Setting for SERVOPACK Parameters 173
5.1.5 Initializing SERVOPACK Parameter Settings 176

5.2 Power Supply Type Settings for the Main Circuit and Control Circuit 178
5.2.1 AC Power Supply Input/DC Power Supply Input Setting 178
5.2.2 Single-phase AC Power Supply Input/Three-phase AC Power Supply Input Setting 179

5.3 Automatic Detection of Connected Motor 180

5.4 Motor Direction Setting 181
5.4.1 Rotary Servomotors 181
5.4.2 Linear Servomotors 181

5.5 Setting the Linear Encoder Pitch 183

5.6 Writing Linear Servomotor Parameters 184
5.6.1 Precautions 184
5.6.2 Applicable Tools 184
5.6.3 Operating Procedure 184
5.6.4 Confirming If the Motor Constants Have Been Written 187

5.7 Selecting the Phase Sequence for a Linear Servomotor 188
5.7.1 Related Parameters 188
5.7.2 Operating Procedure 188

5.8 Polarity Sensor Setting 190

5.9 Polarity Detection 191

5.9.1 Restrictions 191
5.9.2 Using the Servo ON Command (Enable Operation Command) to Perform Polarity Detection 192
5.9.3 Using a Tool Function to Perform Polarity Detection 192

5.10 Overtravel Function and Settings 194
5.10.1 Overtravel Signals 194
5.10.2 Setting to Enable/Disable Overtravel 195
5.10.3 Motor Stopping Method for Overtravel 195
5.10.4 Overtravel Alarms 196
5.10.5 Overtravel Warnings 197
5.10.6 Behavior Selection after Overtravel Release 198
5.10.7 Overtravel Status 199
5.10.8 Overtravel Operation by Mode 199

5.11 Holding Brake 200
5.11.1 Brake Operating Sequence 200
5.11.2 /BK (Brake Output) Signal 201
5.11.3 Output Timing of /BK (Brake Output) Signal When the Servomotor Is Stopped 202
5.11.4 Output Timing of /BK (Brake Output) Signal When the Servomotor Is Operating 202

5.12 Motor Stopping Methods for Servo OFF and Alarms 204
5.12.1 Stopping Method for Servo OFF 204
5.12.2 Servomotor Stopping Method for Alarms 205

5.13 Motor Overload Detection Level 207
5.13.1 Detection Timing for Overload Warnings (A.910) 207
5.13.2 Detection Timing for Overload Alarms (A.720) 207

5.14 Setting Unit Systems 209
5.14.1 Position Reference Unit Setting 209
5.14.2 Electronic Gear Ratio Setting Examples 213
5.14.3 Setting the Speed Reference Unit 214
5.14.4 Setting the Acceleration Reference Unit 215
5.14.5 Setting the Torque Reference Unit 215

5.15 Resetting the Absolute Encoder 217
5.15.1 Precautions on Resetting 217
5.15.2 Preparations 217
5.15.3 Applicable Tools 217
5.15.4 Operating Procedure 218

5.16 Setting the Origin of the Absolute Encoder 220

5.16.1 Absolute Encoder Origin Offset 220
5.16.2 Setting the Origin of the Absolute Linear Encoder 220

5.17 Setting the Regenerative Resistor Capacity 223

5.18 Σ-V/Σ-7 Compatible Function and Settings 225
5.18.1 Setting the Encoder Resolution Compatibility Selection 225

5.1 Manipulating SERVOPACK Parameters (Pn□□□)

This section describes the classifications, notation, and setting methods for the SERVOPACK parameters given in this manual.

5.1.1 Classifications of SERVOPACK Parameters

There are the following two types of SERVOPACK parameters.

Classification	Meaning
Setup Parameters	Parameters for the basic settings that are required for operation.
Tuning Parameters	Parameters that are used to adjust servo performance.

Important

When you edit parameters with the SigmaWin+, setup parameters and tuning parameters are displayed.

When you edit parameters with a digital operator, only setup parameters are displayed by default. To edit tuning parameters, set Pn00B to n.□□□1 (display all parameters).

		Operator Parameter Display Selection Speed Pos Trq		When Enabled
Pn00B (200Bh)	n.□□□X	0 Default	Display only setup parameters.	After restart
		1	Display all parameters.	

The setting method for each type of parameter is described below.

(1) Setup Parameters

You can use the digital operator or SigmaWin+ to set the setup parameters individually.

Information

We recommend that you use the Setup Wizard of the SigmaWin+ to easily set the required setup parameters by setting the operating methods, machine specifications, and I/O signals according to on-screen Wizard instructions.

(2) Tuning Parameters

Normally the user does not need to set the tuning parameters individually.

Use the various SigmaWin+ tuning functions to set the related tuning parameters to increase the response even further for the conditions of your machine. Refer to the following section for details.

☞ *8.7 Autotuning without a Host Reference on page 369*

☞ *8.8 Autotuning with a Host Reference on page 388*

☞ *8.9 Custom Tuning on page 402*

You can also set the tuning parameters individually to make adjustments. Refer to the following section for details.

☞ *8.16 Manual Tuning on page 471*

5.1.2 Notation for Parameters

The notation depends on whether the parameter requires a numeric setting (parameter for numeric setting) or requires the selection of a function (parameter for selecting functions).

(1) Parameters for Numeric Settings

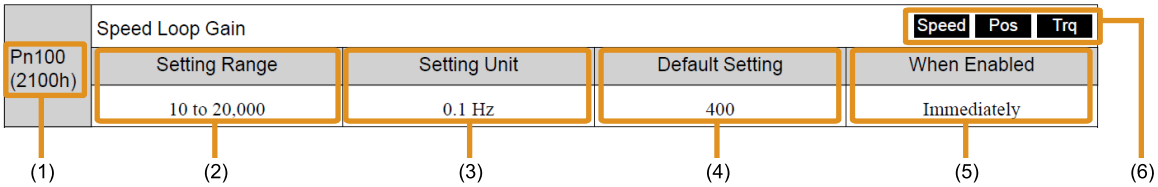

No.	Description
(1)	Parameter number and object index number The object index number is used when accessing an object over EtherCAT communications.
(2)	This is the setting range for the parameter.
(3)	This is the setting unit (setting increment) that you can set for the parameter.
(4)	This is the parameter setting before shipment.
(5)	This is when any change made to the parameter will become effective.
(6)	The control methods for which the parameters apply are given. Speed: A parameter that can be used in speed control. Pos: A parameter that can be used in position control. Trq: A parameter that can be used in torque control. "Torque" is used even for linear servomotor parameters. Grayed-out icons (Speed, Pos, Trq) indicate parameters that cannot be used in the corresponding control method.

(2) Parameters for Selecting Functions

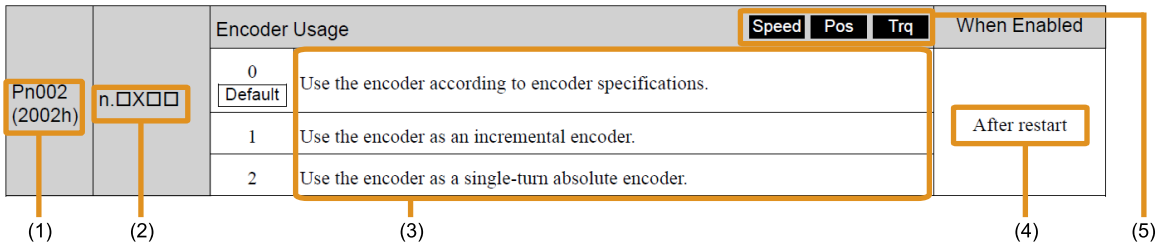

No.	Description
(1)	Parameter number and object index number The object index number is used when accessing an object over EtherCAT communications.
(2)	The notation "n.□□□□" indicates a parameter for selecting functions. The digit shown as "X" is the content being explained in this parameter. Notation Example n. 0 0 0 0 Notation Examples for Pn002 Digit Notation: Pn002 = n.□□□X — Indicates the first digit from the right in Pn002. Digit Notation: Pn002 = n.□□X□ — Indicates the second digit from the right in Pn002. Digit Notation: Pn002 = n.□X□□ — Indicates the third digit from the right in Pn002. Digit Notation: Pn002 = n.X□□□ — Indicates the fourth digit from the right in Pn002. Numeric Value Notation: Pn002 = n.□□□1 — Indicates that the first digit from the right in Pn002 is set to 1. Numeric Value Notation: Pn002 = n.□□1□ — Indicates that the second digit from the right in Pn002 is set to 1. Numeric Value Notation: Pn002 = n.□1□□ — Indicates that the third digit from the right in Pn002 is set to 1. Numeric Value Notation: Pn002 = n.1□□□ — Indicates that the fourth digit from the right in Pn002 is set to 1.
(3)	This column explains the selections for the function. In the above example, the first line gives an explanation of when Pn002 = n.□0□□ is set.

Continued on next page.

Continued from previous page.

No.	Description
(4)	This is when any change made to the parameter will become effective.
(5)	The control methods for which the parameters apply are given. Speed: A parameter that can be used in speed control. Pos: A parameter that can be used in position control. Trq: A parameter that can be used in torque control. "Torque" is used even for linear servomotor parameters. Grayed-out icons (Speed, Pos, Trq) indicate parameters that cannot be used in the corresponding control method.

5.1.3 Setting Methods for SERVOPACK Parameters

You can use the SigmaWin+ or a digital operator to set the SERVOPACK parameters.
Use the following procedure to set the parameters.

(1) Setting SERVOPACK Parameters with the SigmaWin+

1. **Click the [ ] button for the servo drive in the workspace of the Main Window of the SigmaWin+.**
2. **Click [Edit Parameters] in the [Menu] window.**
   The [Edit Parameters] window will be displayed.
3. **Double-click the cell with the setting of the parameter to change.**
   - Parameters for Numeric Settings

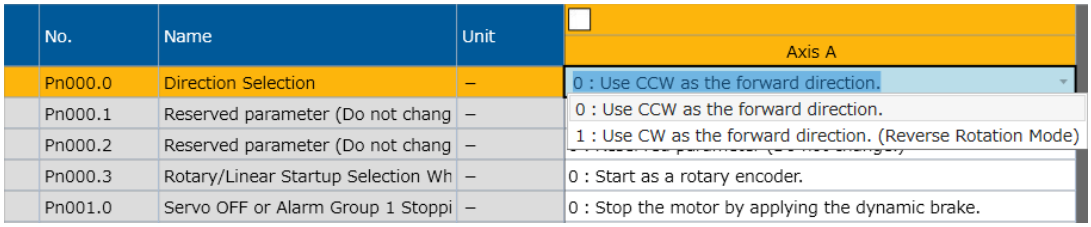

   - Parameters for Selecting Functions

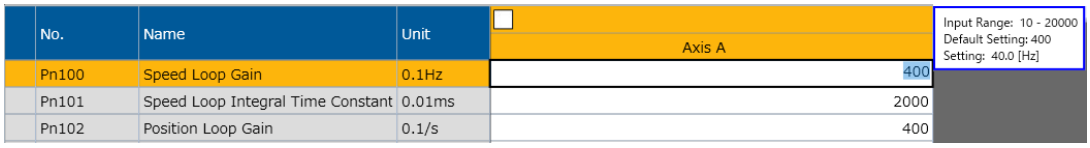

4. **Change the setting of the parameter.**
5. **Press the [Enter] key.**
   The background of the edited parameter cell will change to green.
6. **Click [Edited Parameters] in the [Write to Servo] group.**

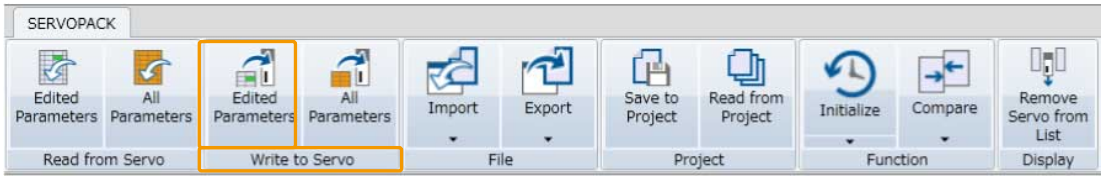

The edited parameters are written to the SERVOPACK and the backgrounds of the cells change to white.

7. **Click the [OK] button.**

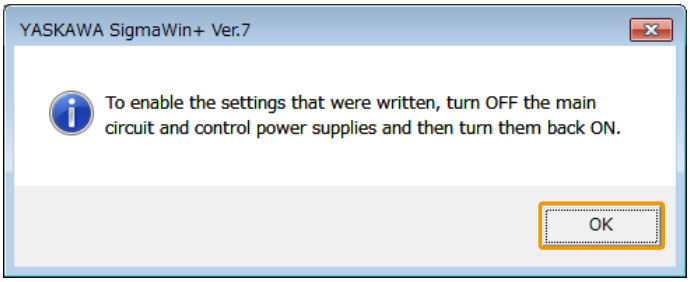

8. **To enable changes to the settings, turn the power to the SERVOPACK OFF and ON again.**

This concludes the procedure to set the parameters.

(2) Setting SERVOPACK Parameters with a Digital Operator

Refer to the following manual for information on setting the SERVOPACK parameters with a digital operator.

Σ-7/Σ-X-Series Digital Operator Operating Manual (Manual No.: SIEP S800001 33)

(3) Setting SERVOPACK Parameters using the EtherCAT Communications

You can set objects 2000h to 26FFh with EtherCAT communications to set the SERVOPACK parameters (Pn000 to Pn6FF).

Object index 2□□□h corresponds to SERVOPACK parameter number Pn□□□.

For example, index 2100h is the same as parameter number Pn100 (2100h = Pn100).

When you use EtherCAT communications objects, you must write the SERVOPACK parameters to non-volatile memory.

To write the SERVOPACK parameters to non-volatile memory, set the Store Parameters (1010h) object.

Refer to the following section for information on Store Parameters (1010h).

15.2.5 Store Parameters (1010h) on page 631

5.1.4 Write Prohibition Setting for SERVOPACK Parameters

You can prohibit writing SERVOPACK parameters from a digital operator. Even if you do, you will still be able to change SERVOPACK parameter settings from the SigmaWin+ or with EtherCAT communications.

(1) Preparations

No preparations are required.

(2) Applicable Tools

The following table lists the tools that you can use to change the Write Prohibition Setting for SERVOPACK parameters.

Tool	Fn No./Function Name	Reference
Digital Operator	Fn010	Σ-7/Σ-X-Series Digital Operator Operating Manual (Manual No.: SIEP S800001 33)
SigmaWin+	[Others] – [Write Prohibition Setting]	*(3) Operating Procedure on page 173*

(3) Operating Procedure

Use the following procedure to prohibit or permit writing parameter settings.

1. **Click the [ ] button for the servo drive in the workspace of the Main Window of the SigmaWin+.**

2. **Click [Write Prohibition Setting] in the [Menu] window.**

   The [Write Prohibition Setting] window will be displayed.

3. **Press the [▼], [▲] for the rightmost digit and set one of the following.**

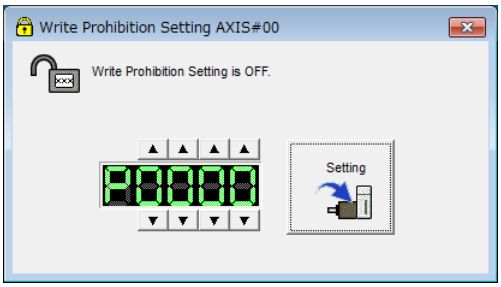

   0000: Writing is permitted (default setting).

   0001: Writing is prohibited.

4. **Click the [Setting] button.**

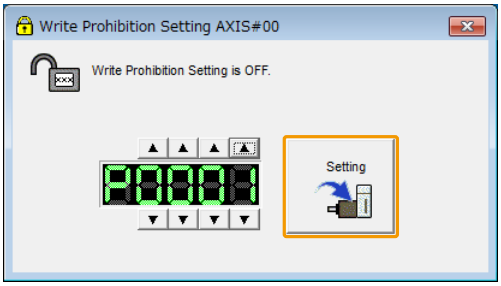

5. **Click the [OK] button.**

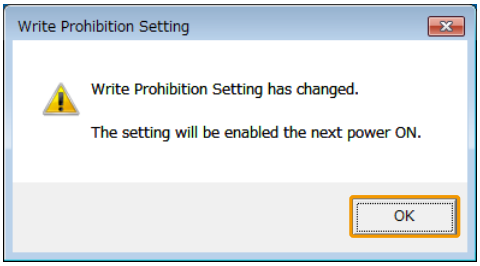

   The setting will be written to the SERVOPACK.

6. **To enable the new setting, turn the power to the SERVOPACK OFF and ON again.**

This concludes the procedure to prohibit or permit writing parameter settings.

(4) Restrictions

If you prohibit writing parameter settings, you will no longer be able to execute some functions. Refer to the following table.

SigmaWin+		Digital Operator		When Writing Is Prohibited	Reference
Button in Menu Window	SigmaWin+ Function Name	Fn No.	Utility Function Name		
Basic Functions	Initialize *1	Fn005	Initialize Parameters	Cannot be executed.	☞ 5.1.5 Initializing SERVOPACK Parameter Settings on page 176
	Software Reset	Fn030	Software Reset	Can be executed.	☞ 6.10 Software Reset on page 274
	Product Information	Fn011	Display Servomotor Model	Can be executed.	☞ 9.1 Monitoring Product Information on page 496
		Fn012	Display Software Version	Can be executed.	
		Fn01E	Display SERVOPACK and Servomotor IDs	Can be executed.	
		Fn01F	Display Servomotor ID from Feedback Option Module	Can be executed.	
Encoder Setting	Absolute Encoder Reset	Fn008	Reset Absolute Encoder	Cannot be executed.	☞ 5.15 Resetting the Absolute Encoder on page 217
	Multiturn Limit Setting	Fn013	Multiturn Limit Setting after Multiturn Limit Disagreement Alarm	Cannot be executed.	☞ 6.8.8 A.CC0 (Multiturn Limit Disagreement Alarm) on page 266
	Origin Search *2	Fn003	Origin Search	Cannot be executed.	☞ 7.6.2 Origin Search on page 324
	Set Origin	Fn020	Set Absolute Linear Encoder Origin	Cannot be executed.	☞ 5.16 Setting the Origin of the Absolute Encoder on page 220
	Polarity Detection	Fn080	Polarity Detection	Cannot be executed.	☞ 5.9 Polarity Detection on page 191
Trouble-shooting	Display Alarm	Fn000	Display Alarm History	Can be executed.	☞ 16.2.4 Displaying the Alarm History on page 731
		Fn006	Clear Alarm History	Cannot be executed.	☞ 16.2.5 Clearing the Alarm History on page 732
		Fn014	Reset Option Module Configuration Error	Cannot be executed.	☞ 16.2.6 Resetting Option Module Configuration Error on page 733
	Reset Motor Type Alarm	Fn021	Reset Motor Type Alarm	Cannot be executed.	☞ 16.2.7 Resetting Motor Type Alarms on page 735
Operation	Jog	Fn002	Jog	Cannot be executed.	☞ 7.3 Trial Operation for the Servomotor without a Load on page 313
	Program JOG Operation	Fn004	Program JOG Operation	Cannot be executed.	☞ 7.6.1 Program Jogging on page 319
Tuning	Tuning - Autotuning without Host Reference	Fn201	Advanced Autotuning without Reference	Cannot be executed.	☞ 8.7 Autotuning without a Host Reference on page 369
	Tuning - Autotuning with Host Reference	Fn202	Advanced Autotuning with Reference	Cannot be executed.	☞ 8.8 Autotuning with a Host Reference on page 388
	Tuning - Custom Tuning	Fn203	One-Parameter Tuning	Cannot be executed.	☞ 8.9 Custom Tuning on page 402
	Tuning - Custom Tuning - Adjust Anti-resonance Control	Fn204	Adjust Anti-resonance Control	Cannot be executed.	☞ 8.10 Anti-Resonance Control Adjustment on page 411
	Tuning - Custom Tuning - Vibration Suppression	Fn205	Vibration Suppression	Cannot be executed.	☞ 8.11 Vibration Suppression on page 417
	Response Level Setting	Fn200	Tuning-less Level Setting	Cannot be executed.	☞ 8.4 Tuning-less Function on page 343

Continued on next page.

Continued from previous page.

SigmaWin+		Digital Operator		When Writing Is Prohibited	Reference
Button in Menu Window	SigmaWin+ Function Name	Fn No.	Utility Function Name		
Diagnostic	Easy FFT	Fn206	Easy FFT	Cannot be executed.	☞ *8.17.2 Easy FFT on page 490*
Others	Adjust the Analog Monitor Output	Fn00C	Adjust Analog Monitor Output Offset	Cannot be executed.	☞ *9.3.3 Using the Analog Monitors on page 509*
		Fn00D	Adjust Analog Monitor Output Gain	Cannot be executed.	
	Adjust the Motor Current Detection Signal Offsets	Fn00E	Autotune Motor Current Detection Signal Offset	Cannot be executed.	☞ *6.12 Adjusting the Motor Current Detection Signal Offset on page 279*
		Fn00F	Manually Adjust Motor Current Detection Signal Offset	Cannot be executed.	
	Initialize Vibration Detection Level	Fn01B	Initialize Vibration Detection Level	Cannot be executed.	☞ *6.11 Vibration Detection Level Initialization on page 276*
	Write Prohibited Setting	Fn010	Write Prohibition Setting	Can be executed.	☞ *5.1.4 Write Prohibition Setting for SERVOPACK Parameters on page 173*

*1 An [Initialize] button will be displayed in the [Edit Parameters] window.
*2 Cannot be used when connecting a linear servomotor.

5.1.5 Initializing SERVOPACK Parameter Settings

You can return the SERVOPACK parameters to their default settings.

This function will not initialize the settings of the parameters that are adjusted for the Fn00C, Fn00D, Fn00E, and Fn00F utility functions.

> **Important**
> To enable the new settings, turn the power supply to the SERVOPACK OFF and ON again after you complete the operation.

(1) Preparations

Check the following settings before you initialize the SERVOPACK parameter settings.

- The SERVOPACK parameters must not be write prohibited.
- The servo must be OFF.

(2) Applicable Tools

The following table lists the tools that you can use to initialize the SERVOPACK parameter settings.

Tool	Fn No./Function Name	Reference
Digital Operator	Fn005	🕮 Σ-7/Σ-X-Series Digital Operator Operating Manual (Manual No.: SIEP S800001 33)
SigmaWin+	[Basic Functions] – [Edit Parameters]	☞ *(3) Operating Procedure on page 176*
EtherCAT Communications	Restore Default Parameters (1011h)	☞ *15.2.6 Restore Default Parameters (1011h) on page 631*

(3) Operating Procedure

Use the following procedure to initialize the parameter settings.

1. **Click the [ ] button for the servo drive in the workspace of the Main Window of the SigmaWin+.**
2. **Click [Edit Parameters] in the [Menu] window.**

   The [Edit Parameters] window will be displayed.
3. **Select any parameter of the axis to initialize.**
4. **Click [Initialize] in [Function] group.**

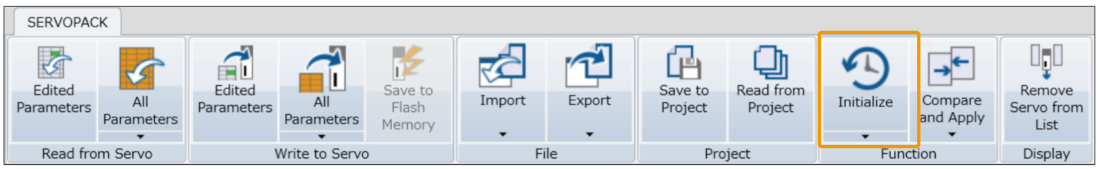

5. **Click the [OK] button.**

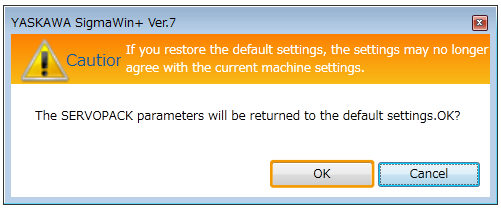

   Click the [Cancel] button to cancel initialization. The [Edit Parameters] window will return.
6. **Click the [OK] button.**

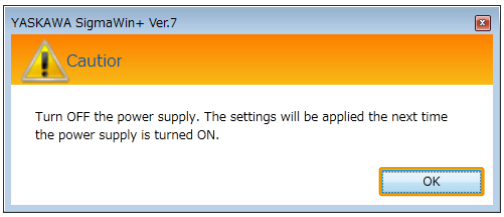

7. **Turn the power to the SERVOPACK OFF and ON again after the parameter settings have been initialized.**

This concludes the procedure to initialize the parameter settings.

5.2 Power Supply Type Settings for the Main Circuit and Control Circuit

A SERVOPACK can be operated on either an AC power supply input or DC power supply input to the main and control circuits. If you select an AC power supply input, you can operate the SERVOPACK on either a single-phase power supply input or a three-phase power supply input. This section describes the settings related to the power supplies.

5.2.1 AC Power Supply Input/DC Power Supply Input Setting

Set Pn001 = n.□X□□ (Main Circuit Power Supply AC/DC Input Selection) to specify whether to use an AC or DC power supply input for the main circuit power supply to the SERVOPACK.

If the setting of Pn001 = n.□X□□ does not agree with the actual power supply input, an A.330 alarm (Main Circuit Power Supply Wiring Error) will occur.

Examples of When an A.330 Alarm (Main Circuit Power Supply Wiring Error) Occurs

- A DC power supply was input between the B1/⊕ - ⊖2 terminals when Pn001 is set to n.□0□□ (set to use an AC power supply).
- An AC power supply was input to the L1, L2, and L3 terminals when Pn001 is set to n.□1□□ (set to use a DC power supply).

		Main Circuit Power Supply AC/DC Input Selection Speed Pos Trq		When Enabled
Pn001 (2001h)	n.□X□□	0 Default	Input AC power as the main circuit power supply using the L1, L2, and L3 terminals (do not use shared converter).	After restart
		1	Input DC as the main circuit power supply using the B1/⊕, ⊖2 terminals or the B1 and ⊖2 terminals (use an external converter or the shared converter).	

⚠ WARNING

Always use the specified terminals to connect the SERVOPACK and peripheral devices. For the power supply wiring in particular, confirm that the connections are made with the terminals shown below.

SERVOPACKs with a 200-VAC Power Supply Input

- **Connect an AC power supply to the L1, L2, and L3 terminals and the L1C and L2C terminals on the SERVOPACK.**
- **Connect a DC power supply to the B1/⊕ and ⊖2 terminals and the L1C and L2C terminals on the SERVOPACK.**

SERVOPACKs with a 400-VAC Power Supply Input

- **Connect an AC power supply to the L1, L2, and L3 terminals on the SERVOPACK.**
- **Connect a DC power supply to the B1/⊕ and ⊖2 terminals on the SERVOPACK.**
- **Regardless of whether the main circuit power supply wiring is AC or DC, connect the 24-VDC input for the control power supply to the 24-V and 0-V terminals.**

There is a risk of failure or fire.

⚠ WARNING

Always specify a DC power supply Pn001 = n.□1□□ (DC power supply input) before you input for the main circuit power supply.

If you input without specifying a DC power supply Pn001 = n.□1□□ (DC power supply input), the SERVOPACK's internal elements may burn and may cause fire or damage to the equipment.

⚠ WARNING

If you use DC power input with the SGDXS-□□□A, install fuses on the power supply line.

⚠ WARNING

The servomotor returns regenerative energy to the power supply. If you use a SERVOPACK with a DC power supply input, regenerative energy is not processed. Process the regenerative energy at the power supply.

⚠ WARNING

If you use a DC power supply input with any of the following SERVOPACKs, externally connect an inrush current limiting circuit and use the power ON and OFF sequences recommended by Yaskawa: SGDXS-330A, -470A, -550A, -590A, -780A, -□□□D.

There is a risk of equipment damage.

⚠ CAUTION

Wait for at least 20 minutes (or 100 minutes when using DC power supply input) after turning OFF the power and then make sure that the CHARGE indicator is not lit before starting wiring or inspection work. Do not touch the main circuit terminals while the CHARGE indicator is lit because high voltage may still remain in the SERVOPACK even after turning OFF the power.

There is a risk of electric shock.

Refer to the following section for information on wiring the SERVOPACK.

☞ *4.3.4 Power Supply Wiring Diagrams on page 133*

5.2.2 Single-phase AC Power Supply Input/Three-phase AC Power Supply Input Setting

Some models of three-phase 200-VAC SERVOPACKs can also operate on a single-phase 200-VAC power supply.

You can use a single-phase, 200-VAC power supply input with the following models.

- SGDXS-R70A, -R90A, -1R6A, -2R8A, -5R5A

If you use a single-phase, 200-VAC power supply input for the SERVOPACK's main circuit power supply, set parameter Pn00B to n.□1□□ (use a three-phase power supply input as a single-phase power supply input).

Information: You do not need to change the setting of Pn00B to n.□1□□ (use a three-phase power supply input as a single-phase power supply input) for a SERVOPACK with a single-phase 200-VAC power supply input (model numbers: SGDXS-120A□□□0008).

		Power Input Selection for Three-phase SERVOPACK Speed Pos Trq		When Enabled
Pn00B (200Bh)	n.□X□□	0 Default	Use a three-phase power supply input.	After restart
		1	Use a three-phase power supply input as a single-phase power supply input.	

Important

1. If you use a single-phase power supply input without setting Pn00B to n.□1□□ (use a three-phase power supply input as a single-phase power supply input), an A.F10 alarm (Power Supply Line Open Phase) will occur.
2. Not all SERVOPACKs can be run on a single-phase AC power supply input. If you connect a single-phase AC power supply input to a SERVOPACK that does not support single-phase power, an A.F10 alarm (Power Supply Line Open Phase) will occur.
3. If you use a single-phase 200-VAC power supply input, the torque-rotation speed characteristic of the servomotor will not be the same as for a three-phase AC power supply input. Decide whether to use a single-phase or three-phase AC power supply input after checking the characteristics given in the servomotor manual or catalog.

Refer to the following section for information on wiring a single-phase AC power supply input to the SERVOPACK.

☞ *(c) Wiring Example for Single-Phase, 200-VAC Power Supply Input on page 134*

5.3 Automatic Detection of Connected Motor

You can use a SERVOPACK to operate either a rotary servomotor or a linear servomotor.

If you connect the servomotor encoder to the CN2 connector on the SERVOPACK, the SERVOPACK will automatically determine which type of servomotor is connected. Therefore, you normally do not need to specify the servomotor type.

Information

If an encoder is not connected, e.g., for a test without a motor, you can specify a rotary servomotor or a linear servomotor in Pn000 = n.X□□□ (Rotary/Linear Servomotor Startup Selection When Encoder Is Not Connected). If you specify either a rotary or linear servomotor, only the parameters, monitors, alarms, and functions for the specified motor type will be enabled.

		Rotary/Linear Servomotor Startup Selection When Encoder Is Not Connected Speed Pos Trq		When Enabled
Pn000 (2000h)	n.X□□□	0 Default	When an encoder is not connected, start as SERVOPACK for rotary servomotor.	After restart
		1	When an encoder is not connected, start as SERVOPACK for linear servomotor.	

5.4 Motor Direction Setting

You can change the direction of servomotor rotation without changing the polarity of the speed or position reference by setting Pn000 to n.□□□X (Rotation Direction Selection).

This causes the rotation direction of the servomotor to change, but the polarity of the signals, such as encoder divided pulse output, output from the SERVOPACK do not change. Set the appropriate direction for your system.

Refer to the following section for details on the encoder divided pulse output.

☞ *6.5 Encoder Divided Pulse Output on page 248*

5.4.1 Rotary Servomotors

The default setting for forward rotation is counterclockwise (CCW) as viewed from the load end of the servomotor.

Parameter		Forward/ Reverse Reference	Motor Direction and Encoder Divided Pulse Outputs	Applicable Overtravel Signal (OT)
Pn000 (2000h)	n.□□□0 Use CCW as the forward direction. (default setting)	Forward reference	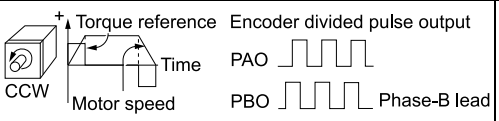	P-OT (Forward Drive Prohibit Input) Signal
		Reverse reference	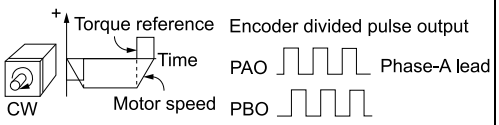	N-OT (Reverse Drive Prohibit Input) Signal
	n.□□□1 Use CW as the forward direction. (Reverse Rotation Mode)	Forward reference	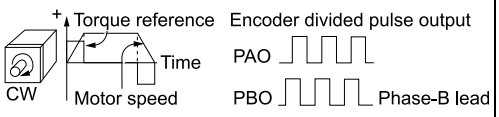	P-OT (Forward Drive Prohibit Input) Signal
		Reverse reference	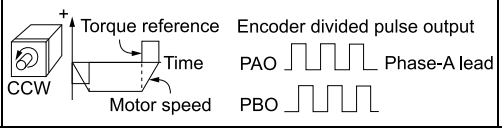	N-OT (Reverse Drive Prohibit Input) Signal

Note:

The trace waveforms of the SigmaWin+ are shown in the above table for the torque reference and motor speed diagrams. If you measure them on a measuring instrument, e.g., with an analog monitor, the polarity will be reversed.

5.4.2 Linear Servomotors

Important

Before you set this parameter, make sure that Pn080 = n.□□X□ (Motor Phase Sequence Selection) is set correctly.

☞ *5.7 Selecting the Phase Sequence for a Linear Servomotor on page 188*

Parameter		Forward/ Reverse Reference	Motor Direction and Encoder Divided Pulse Outputs	Applicable Overtravel Signal (OT)
Pn000 (2000h)	n.□□□0 Use the direction in which the linear encoder counts up as the forward direction. (default setting)	Forward reference	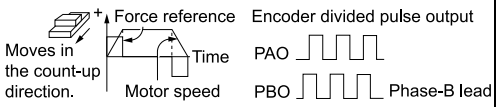	P-OT (Forward Drive Prohibit Input) Signal
		Reverse reference	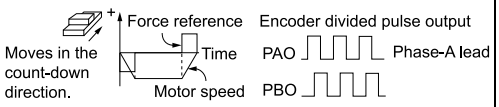	N-OT (Reverse Drive Prohibit Input) Signal
	n.□□□1 Use the direction in which the linear encoder counts up as the reverse direction.	Forward reference	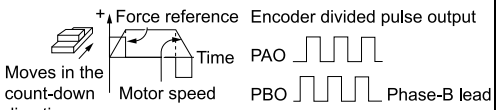	P-OT (Forward Drive Prohibit Input) Signal
		Reverse reference	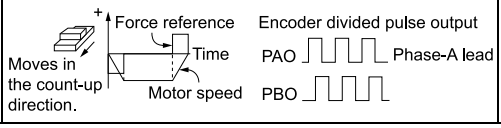	N-OT (Reverse Drive Prohibit Input) Signal

Note:

The trace waveforms of the SigmaWin+ are shown in the above table for the force reference and motor speed diagrams. If you measure them on a measuring instrument, e.g., with an analog monitor, the polarity will be reversed.

5.5 Setting the Linear Encoder Pitch

If you connect a linear encoder to the SERVOPACK through a serial converter unit, you must set the scale pitch of the linear encoder in Pn282.

If a serial converter unit is not connected, the setting of Pn282 will be invalid.

Term

Serial Converter Unit :

The serial converter unit converts the signal from the linear encoder into a form that can be read by the SERVOPACK.

Scale Pitch :

A linear encoder has a scale for measuring lengths (positions). The length of one division on this scale is the scale pitch.

Pn282 (2282h)	Linear Encoder Scale Pitch			Speed Pos Trq
	Setting Range	Setting Unit	Default Setting	When Enabled
	0 to 6553600	0.01 µm	0	After restart

You will not be able to control the linear servomotor if Pn282 is not set correctly. Check the following table and always set the correct value before you operate the linear servomotor.

Type of Linear Encoder	Manufacturer	Model	Serial Converter Unit Model	Linear Encoder Scale Pitch [µm]
Incremental	Heidenhain Corporation	LIDA48□	JZDP-H003-□□□-E	20
			JZDP-J003-□□□-E	
		LIF48□	JZDP-H003-□□□-E	4
			JZDP-J003-□□□-E	
	Renishaw PLC	RGH22B	JZDP-H005-□□□-E	20
			JZDP-J005-□□□-E	

The first time you supply power to the SERVOPACK, the panel display on the front of the servomotor will display an A.080 alarm (Linear Encoder Pitch Setting Error). The A.080 alarm is displayed because the setting of Pn282 has not been changed. The A.080 alarm will be cleared when you change the setting of Pn282 and then turn the power OFF and ON again.

Information

Linear Encoder Scale Pitch

If you do not use a serial converter unit, the linear encoder pitch is automatically set, and the setting of Pn282 will be invalid. Refer to the following sections for details.

☞ ◆ *Feedback Resolution of Linear Encoder: Incremental Linear Encoder on page 211*

☞ ◆ *Feedback Resolution of Linear Encoder: Absolute Linear Encoder on page 212*

5.6 Writing Linear Servomotor Parameters

If you connect a linear encoder to the SERVOPACK without going through a serial converter unit, you must use the SigmaWin+ to write the motor constants to the linear encoder. The motor constants contain the information that is required by the SERVOPACK to operate the linear servomotor.

⚠ WARNING

Check if the servomotor and linear encoder information to write is correct.

There is a risk of the servomotor running out of control, device damage, personal injury, and fire by writing incorrect motor constants.

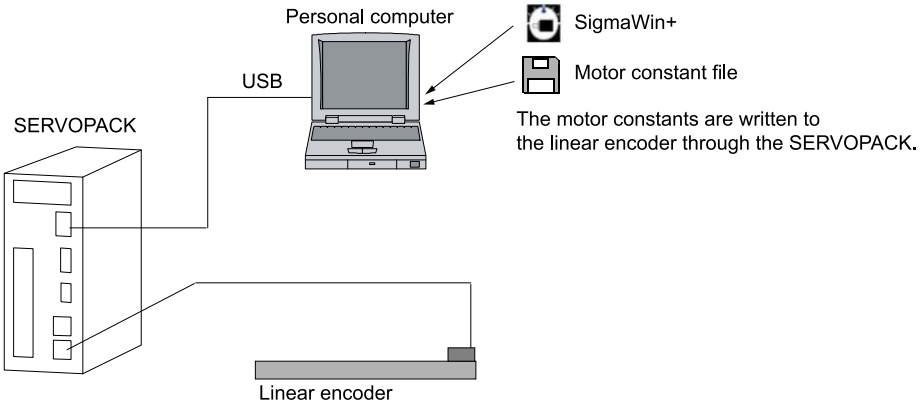

Important

Serial number information is not included in the motor constants. You cannot use the monitor functions of the SERVOPACK to monitor the serial number.

If you attempt to monitor the serial number, ********** will be displayed.

5.6.1 Precautions

- If the encoder parameters are not written to the linear encoder, an A.CA0 alarm (Encoder Parameter Error) will occur. Consult the manufacturer of the linear encoder.
- If the motor constants are not written to the linear encoder, an A.CA0 alarm (Encoder Parameter Error) will not occur, but the following alarms will occur.
  A.040 (Parameter Setting Error), A.041 (Encoder Output Pulse Setting Error), A.050 (Combination Error), A.051 (Unsupported Device Alarm), A.550 (Maximum Motor Speed Setting Error), A.710 (Instantaneous Overload), A.720 (Continuous Overload), and A.C90 (Encoder Communications Error)

5.6.2 Applicable Tools

The following table lists the tools that you can use to write the parameters to the linear servomotor.

Tool	Fn No./Function Name	Reference
Digital Operator	You cannot write linear servomotor parameters from the digital operator.	
SigmaWin+	[Encoder Setting] – [Motor Parameter Scale Write]	☞ *5.6.3 Operating Procedure on page 184*

5.6.3 Operating Procedure

Use the following procedure to write the motor constants to the linear encoder.

1. **Prepare the motor constant file to write to the linear encoder.**
2. **Click the [ ] button for the servo drive in the workspace of the Main Window of the SigmaWin+.**
3. **Select [Motor Parameter Scale Write] in the [Menu] window.**

   The [Motor Parameter Scale Write] window will be displayed.
4. **Click the [OK] button.**

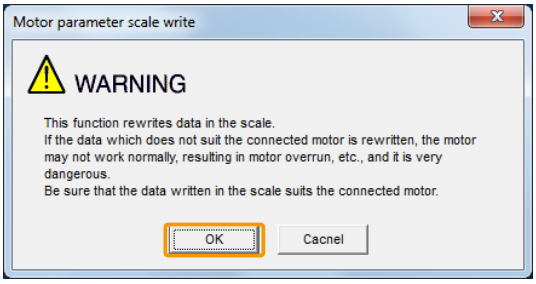

   Click the [Cancel] button to cancel writing the motor constant scale to the linear encoder. The Main Window will return.

   If the write is completed normally, the [Motor Parameter Scale Write - File Select] window will be displayed.
5. **Click the [Ref.] button.**

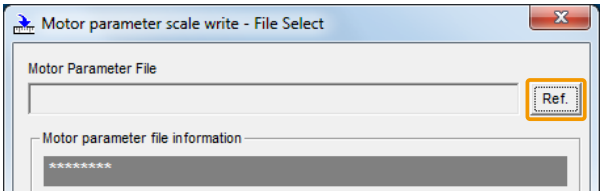

6. **Select the motor constant file that you prepared and click the [Open] button.**

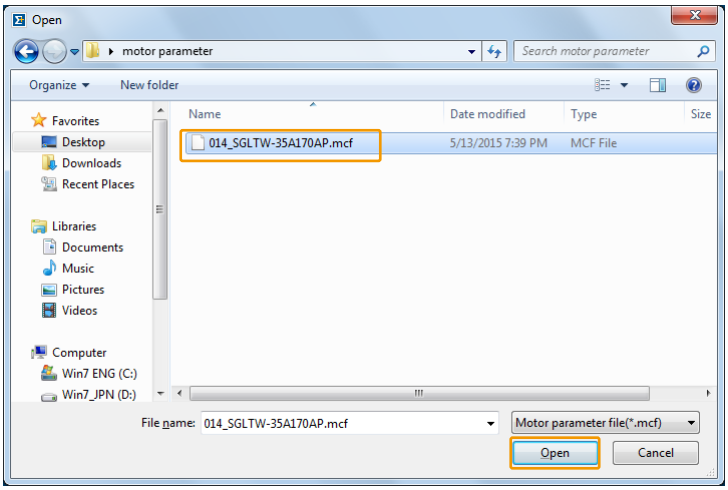

7. **Confirm that the motor constant file information that is displayed is suitable for your servomotor, and then click the [Next] button.**

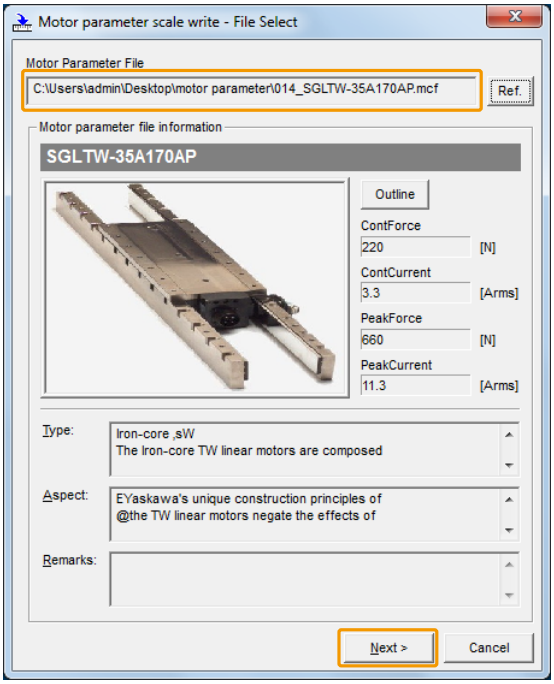

Information
- Click the [Outline] button to display the dimensional drawing.
- Click the image of the servomotor to enlarge the view.

Click the [Cancel] button to cancel writing the motor constant scale to the linear encoder. The Main Window will return.

8. **Click the [Write] button.**

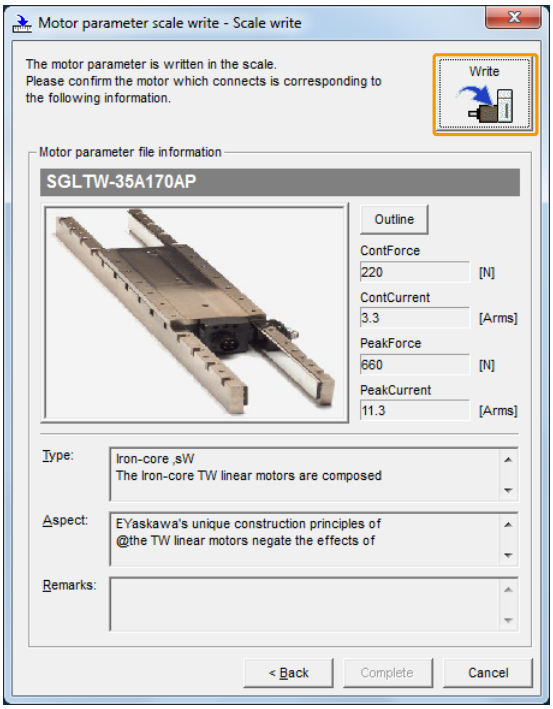

9. **Click the [Yes] button.**

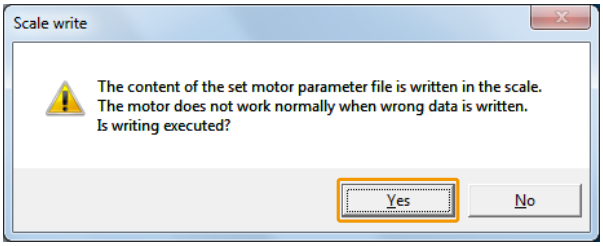

Click the [No] button to cancel writing the motor constant scale to the linear encoder.
If you click the [Yes] button, writing the motor constant scale will start.

10. **Click the [Complete] button.**

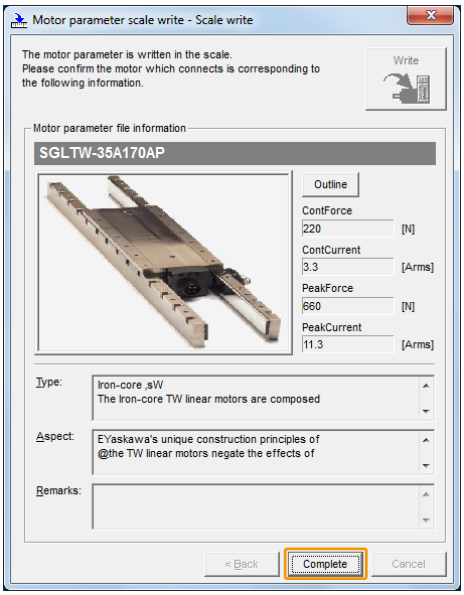

11. **Click the [OK] button.**

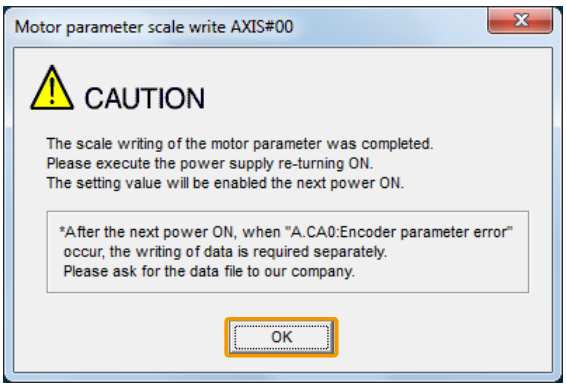

12. **Turn the power to the SERVOPACK OFF and ON again.**

This concludes the procedure to write the motor constants.

5.6.4 Confirming If the Motor Constants Have Been Written

After you write the motor constants, you can use a monitor function to confirm that the motor constants are in the encoder.

If the motor constants have not been written, no information on the servomotor will be displayed.

☞ *9.1 Monitoring Product Information on page 496*

5.7 Selecting the Phase Sequence for a Linear Servomotor

You must select the phase sequence of the linear servomotor so that the forward direction of the linear servomotor is the same as the encoder's count-up direction. This is accomplished with the setting that synchronizes the position and direction of the servomotor and encoder.

Before you set Pn080 to n.□□X□ (Motor Phase Sequence Selection), check the following items.

- Confirm that the signal from the linear encoder is being received normally.
- Make sure that the forward direction of the linear servomotor and the count-up direction of the linear encoder are in the same direction.

Important

- If you do not confirm the above items before you attempt to operate the servomotor, the servomotor may not operate or it may run out of control. Always confirm these items before you operate the servomotor.
- To set Pn000 to n.□□□X (Direction Selection), first set Pn080 to n.□□X□ explained here, and then set Pn000 to n.□□□X.
- If you changed the setting of Pn080 = n.□□X□ (Motor Phase Sequence Selection) when using an absolute encoder, always detect the polarity afterward. If you change the setting of Pn080 = n.□□X□ after the polarity is detected, A.C10 (Servomotor Out of Control) will occur.

5.7.1 Related Parameters

		Motor Phase Sequence Selection Speed Pos Trq		When Enabled
Pn080 (2080h)	n.□□X□	0 Default	Set a phase-A lead as a phase sequence of U, V, and W.	After restart
		1	Set a phase-B lead as a phase sequence of U, V, and W.	

5.7.2 Operating Procedure

Use the following procedure to select the phase sequence for a linear servomotor.

1. **Set Pn000 to n.□□□0 (use the direction in which the linear encoder counts up as the forward direction).**

   This setting is to make following confirmation work easier to understand.

2. **Click [Monitor] in the [Menu] window.**

   The [Operation] window will be displayed so that you can check the feedback pulse counter.

   To check the feedback pulse counter with the digital operator, use Un00D (Feedback Pulse Counter).

3. **Manually move the moving coil from one end to the other of the stroke and confirm that only the correct number of feedback pulses is returned.**

   If the correct number and only the correct number of pulses is returned, the signal is being received correctly from the linear encoder.

   Setting Example

   In this example, assume that a linear encoder with a scale pitch of 20 μm and a resolution of 256 is used. If you manually move the moving coil 1 cm in the count-up direction of the linear encoder, the number of feedback pulses would be as follows: 1 cm/(20 μm/256) = 128000 pulses

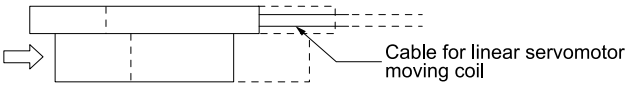

If the value on the feedback pulse counter is 128000 pulses after you manually moved the linear servomotor in the direction of the cable, confirmation is complete.

Note:

The actual monitor display will be offset by the error in the travel distance. There is no problem as long as the above value is close to the calculated value.

Information

If the correct value is not displayed for the feedback pulse counter, the following conditions may exist. Check the situation and correct any problems.

- The linear encoder pitch is not correct.
  If the scale pitch that is set in Pn282 does not agree with the actual scale pitch, the expected number of feedback pulses will not be returned. Check the specifications of the linear encoder.
- The linear encoder is not adjusted properly.
  If the linear encoder is not adjusted properly, the output signal level from the linear encoder will drop and the correct number of pulses will not be counted. Check the adjustment of the linear encoder. Contact the manufacturer of the linear encoder for details.
- There is a mistake in the wiring between the linear encoder and the serial converter unit.
  If the wiring is not correct, the correct number of pulses will not be counted. Correct the wiring.

4. **Manually move the moving coil in the direction of the cable and check the value of the feedback pulse counter in the [Operation] window to confirm that it is counting up.**

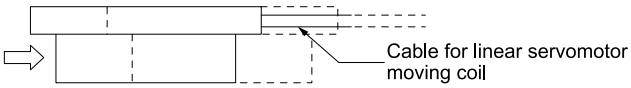

Manually move the linear servomotor in the direction of the cable.

5. **If the feedback pulse counter counts up, set Pn080 to n.□□0□ (phase-A lead as a phase sequence of U, V, and W). If the feedback pulse counter counts down, set Pn080 to n.□□1□ (phase-B lead as a phase sequence of U, V, and W).**
6. **Turn the power to the SERVOPACK OFF and ON again.**
7. **If necessary, return Pn000 = n.□□□X (Movement Direction Selection) to its original setting.**

This concludes the procedure to set the phase sequence of the linear servomotor.

5.8 Polarity Sensor Setting

The polarity sensor detects the polarity of the servomotor. You must set a parameter to specify whether the linear servomotor that is connected to the SERVOPACK has a polarity sensor. Specify whether there is a polarity sensor in Pn080 = n.□□□X (Polarity Sensor Selection).

If the linear servomotor has a polarity sensor, set Pn080 to n.□□□0 (use polarity sensor) (default setting).

If the linear servomotor does not have a polarity sensor, set Pn080 to n.□□□1 (do not use polarity sensor). Turn the power OFF and ON again to enable the new setting.

		Polarity Sensor Selection Speed Pos Trq		When Enabled
Pn080 (2080h)	n.□□□X	0 Default	Use polarity sensor.	After restart
		1	Do not use polarity sensor.	

Information

If you set Pn080 to n.□□□0 (use polarity sensor) and the linear servomotor that is connected to the SERVOPACK does not have a polarity sensor, an A.C21 alarm (Polarity Sensor Error) will occur when you turn the power OFF and ON again.

5.9 Polarity Detection

If you use a linear servomotor that does not have a polarity sensor, then you must detect the polarity.

Detecting the polarity means that the position of the electrical phase angle on the electrical angle coordinates of the servomotor is detected. The SERVOPACK cannot control the servomotor correctly unless it accurately knows the position of the electrical angle coordinate of the servomotor.

The execution timing and execution method for polarity detection depend on the encoder specification as described in the following table.

Encoder Specification	Polarity Detection Execution Timing	Polarity Detection Execution Method
Incremental encoder	Each time the control power to the SERVOPACK is turned ON (Even after you execute polarity detection, the position of the polarity will be lost the next time the control power to the SERVOPACK is turned OFF.)	• Use the Servo ON command (Enable Operation command). • Use the polarity detection function of the SigmaWin+. • Execute the Fn080 (Polarity Detection) utility function from the digital operator.
Absolute encoder	Only for initial setup, or after the SERVOPACK, linear encoder, or servomotor has been replaced (The results of polarity detection is stored in the absolute encoder, so the polarity position is not lost when the control power is turned OFF.)	• Use the polarity detection function of the SigmaWin+. • Execute the Fn080 (Polarity Detection) utility function from the digital operator.

Important

If you changed the setting of Pn080 = n.□□X□ (Motor Phase Sequence Selection) when using an absolute encoder, always detect the polarity afterward. If you change the setting of Pn080 = n.□□X□ after the polarity is detected, A.C10 (Servomotor Out of Control) will occur.

Information

- If you use a linear servomotor that does not have a polarity sensor, you will not be able to turn ON the servo until polarity detection has been completed.
- When this function is being executed, the Less-Deviation Control Function is disabled.

5.9.1 Restrictions

(1) Assumed Conditions

The servomotor will move when you execute polarity detection. The following conditions must be met before you start.

- It must be OK to move the moving coil about 10 mm.(If polarity detection fails, the moving coil may move approximately 5 cm. The amount of movement depends on conditions.)
- The linear encoder pitch must be 100 µm or less. (We recommend a pitch of 40 µm or less for an incremental encoder.)
- As much as possible, the motor must not be subjected to an imbalanced external force. (We recommend 5% or less of the rated force.)
- The mass ratio must be 50x or less.
- The axis must be horizontal.
- There must be friction equivalent to a few percent of the rated force applied to the guides. (Air sliders cannot be used.)

(2) Preparations

Always check the following before you execute polarity detection.

- Pn080 must be set to n.□□□1 (do not use polarity sensor).
- The servo must be OFF.
- The main circuit power must be ON.
- There must be no hard wire base block (HWBB).
- There must be no alarms except for an A.C22 alarm (Phase Information Disagreement).

- The parameters must not be write prohibited. (This item applies only when using the SigmaWin+ or digital operator.)
- Pn00C must be set to n.□□□0 (test without a motor function is disabled).
- There must be no overtravel.
- If the motor constants have been written or the origin of the absolute linear encoder has been set, the power to the SERVOPACK must be turned OFF and ON again after completion of the writing or setting operation.

Important
- Power is supplied to the servomotor during polarity detection. Be careful not to get an electric shock. Also, the moving coil of the linear servomotor may greatly move during detection. Do not approach the moving parts of the servomotor.
- Polarity detection is affected by many factors. For example, polarity detection may fail if the mass ratio or friction is too large or the cable tension is too strong.

5.9.2 Using the Servo ON Command (Enable Operation Command) to Perform Polarity Detection

You can use the Servo ON command (Enable Operation command) to perform polarity detection only with an incremental linear encoder.

Polarity detection will start simultaneously with execution of the Servo ON command (Enable Operation command). As soon as polarity detection is completed, the /S-RDY will turn ON and the servo will change to ON status (Statusword = Operation Enabled).

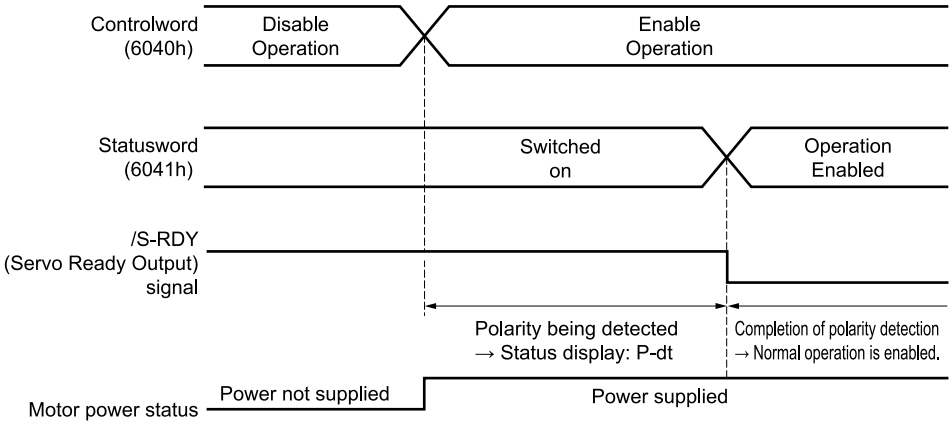

5.9.3 Using a Tool Function to Perform Polarity Detection

(1) Applicable Tools

The following table lists the tools that you can use to perform polarity detection.

Tool	Fn No./Function Name	Reference
Digital Operator	Fn080	Σ-7/Σ-X-Series Digital Operator Operating Manual (Manual No.: SIEP S800001 33)
SigmaWin+	[Encoder Setting] – [Polarity Detection]	*(2) Operating Procedure on page 192*

(2) Operating Procedure

Use the following procedure to perform polarity detection.

1. **Click the [ ] button for the servo drive in the workspace of the Main Window of the SigmaWin+.**
2. **Click [Polarity Detection] in the [Menu] window.**

   The [Polarity Detection] window will be displayed.

3. **Click the [Continue] button.**

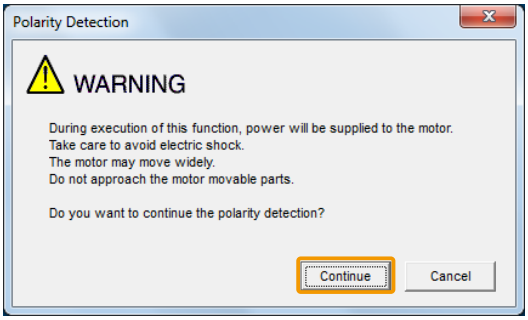

Click the [Cancel] button to cancel polarity detection. The Main Window will return.

4. **Click the [Start] button.**

Polarity detection will be executed.

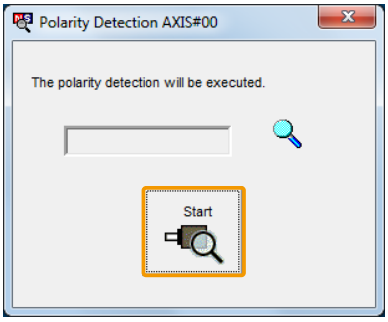

This concludes the polarity detection procedure.

5.10 Overtravel Function and Settings

Overtravel is a function of the SERVOPACK that forces the servomotor to stop in response to a signal input from a limit switch that is activated when a moving part of the machine exceeds the safe range of movement.

The overtravel signals include the P-OT (Forward Drive Prohibit Input) and the N-OT (Reverse Drive Prohibit Input) signals. You use the P-OT and N-OT signals to stop the machine by installing limit switches at the positions where you want to stop the machine that is operated by the servomotor.

A SERVOPACK wiring example is provided below.

Rotary Servomotors

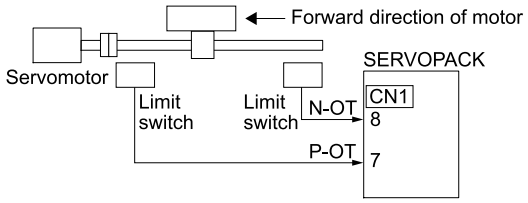

Linear Servomotors

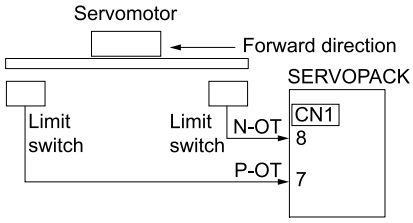

Using the overtravel function is not necessary for rotating applications such as rotary tables and conveyors. No wiring for overtravel input signals is required.

This section describes the parameters settings related to overtravel.

⚠ CAUTION

To prevent accidents that may result from poor contact or disconnections, use normally closed limit switches. Do not change the default settings of the polarity of the overtravel signals (P-OT and N-OT).

If you use a servomotor for a vertical axis, the /BK (Brake Output) signal will remain ON (i.e., the brake will be released) when overtravel occurs. This may result in the workpiece falling when overtravel occurs. To prevent the workpiece from falling, set Pn001 to n.□□1□ to place the servomotor in a zero-clamped state when it stops.

A base block state is entered after stopping for overtravel. This may cause the servomotor to be pushed back by an external force on the load shaft. To prevent the servomotor from being pushed back, set Pn001 to n.□□1□ to place the servomotor in a zero-clamped state when it stops.

5.10.1 Overtravel Signals

The overtravel signals include the P-OT (Forward Drive Prohibit Input) and the N-OT (Reverse Drive Prohibit Input) signals.

Standard	Signal	Connector Pin No.	Signal Status	Meaning
Input	P-OT	CN1-7	ON	Forward drive is enabled (actual operation).
			OFF	Forward drive is prohibited (forward overtravel).
	N-OT	CN1-8	ON	Reverse drive is enabled (actual operation).
			OFF	Reverse drive is prohibited (reverse overtravel).

You can operate the servomotor in the opposite direction during overtravel by inputting a reference.

5.10.2 Setting to Enable/Disable Overtravel

Enable and disable overtravel by setting parameters.

You do not need to wire the overtravel input signals if you are not going to use the overtravel function.

The parameters to use for the settings depend on the allocation method as shown below.

Allocation Method	Parameter to Use
Σ-7S-compatible I/O Signal Allocation	• Pn50A = n.□□□1 (use Sigma-7S-compatible I/O signal allocations) • Pn50A = n.X□□□ (P-OT (Forward Drive Prohibit Input) Signal Allocation) • Pn50B = n.□□□X (N-OT (Reverse Drive Prohibit Input) Signal Allocation)
Σ-LINK II Input Signal Allocation	• Pn50A = n.□□□2 (use Σ-LINK II input signal allocations) • Pn590 (P-OT (Forward Drive Prohibit Input) Signal Allocation) • Pn591 (N-OT (Reverse Drive Prohibit Input) Signal Allocation)

Refer to the following section for details on allocations.

☞ *6.1.2 I/O Signal Allocations on page 232*

5.10.3 Motor Stopping Method for Overtravel

You can set the stopping method of the servomotor when overtravel occurs in Pn001 = n.□□XX (Motor Stopping Method for Servo OFF and Group 1 Alarms and Overtravel Stopping Method).

Parameter		Motor Stopping Method *1	Status after Stopping	When Enabled
Pn001 (2001h)	**n.□□00 (default setting)**	Dynamic brake	Coasting	After restart
	n.□□01			
	n.□□02	Coasting		
	n.□□1□	Deceleration according to setting of Pn406 (2406h)	Zero clamp	
	n.□□2□		Coasting	
	n.□□3□	Deceleration according to setting of Pn30A (230Ah)	Zero clamp	
	n.□□4□		Coasting	

*1 You cannot decelerate a servomotor to a stop during torque control. The servomotor will be stopped with the dynamic braking or coast to a stop (according to the setting of Pn001 = n.□□□X (Motor Stopping Method for Servo OFF and Group 1 Alarms)), and then the servomotor will enter a coasting state.

Refer to the following section for information on stopping methods other than those for overtravel.

☞ *5.12 Motor Stopping Methods for Servo OFF and Alarms on page 204*

(1) Stopping the Servomotor by Setting Emergency Stop Torque

To stop the servomotor by setting emergency stop torque, set Pn406 (Emergency Stop Torque).

If Pn001 = n.□□X□ is set to 1 or 2, the servomotor will be decelerated to a stop using the torque set in Pn406 as the maximum torque.

The default setting is 800%. This setting is large enough to allow you to operate the servomotor at the instantaneous maximum torque. However, the maximum emergency stop torque that you can actually use is the instantaneous maximum torque of the servomotor.

Pn406 (2406h)	Emergency Stop Torque			Speed Pos Trq
	Setting Range	Setting Unit	Default Setting	When Enabled
	0 to 800	1%	800	Immediately

Note:

The setting unit is a percentage of the motor rated torque.

(2) Stopping the Servomotor by Setting the Deceleration Time

To specify the servomotor deceleration time and use it to stop the servomotor, set Pn30A (Deceleration Time for Servo OFF and Forced Stops).

The maximum torque value when stopping is the value set in Pn406 (Emergency Stop Torque).

Pn30A (230Ah)	Deceleration Time for Servo OFF and Forced Stops			Speed Pos Trq
	Setting Range	Setting Unit	Default Setting	When Enabled
	0 to 12000	1 ms	0	Immediately

If you set Pn30A to 0, the servomotor will be stopped with a zero speed.

The deceleration time that you set in Pn30A is the time to decelerate the servomotor from the maximum motor speed.

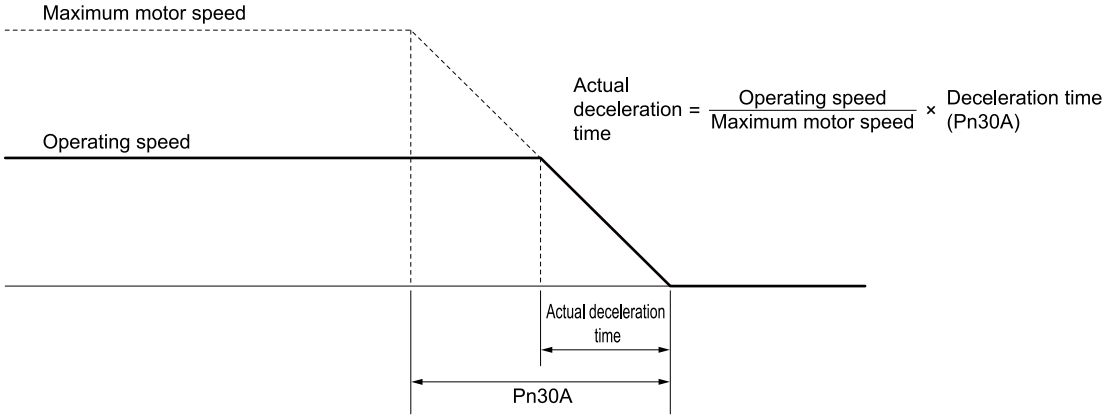

5.10.4 Overtravel Alarms

You can set the system to detect an A.d04 alarm (Overtravel) if overtravel occurs while the servo is ON. This function activates an alarm and stops the servomotor when the overtravel signal is input. An alarm occurs only if overtravel occurs while the servo is ON. An overtravel alarm will not be detected when the servo is OFF, even if overtravel occurs.

Note:

If the overtravel alarm is enabled, homing using a limit switch cannot be performed.

The following parameter is set for this function.

Pn00D (200Dh)	n.X□□□	Overtravel Warning Detection Selection		Speed Pos Trq	When Enabled
		0 Default	Do not detect overtravel warnings.		Immediately
		1	Detect overtravel warnings.		
		2	Detect overtravel alarms.		

A timing chart for alarm detection is provided below.

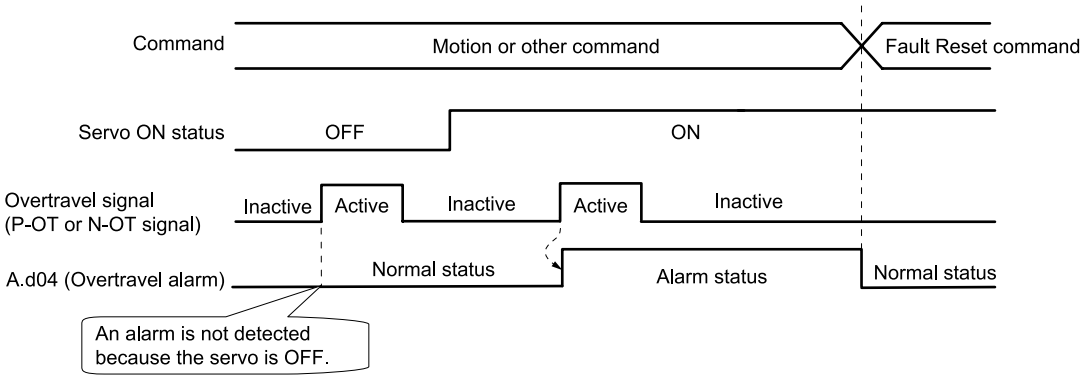

Information
- Alarms are detected for overtravel in the same direction as the reference.
- Alarms are not detected for overtravel in the opposite direction from the reference.
  Example: An alarm will not be output for a forward reference even if the N-OT signal turns ON.
- If the travel command is 0, an alarm will be detected with overtravel in either the forward or reverse direction.
- An alarm will not be detected when the servo is turned ON even if overtravel status exists.
-
- If software limits are enabled, an alarm will not be detected as overtravel if a software limit status exists.

5.10.5 Overtravel Warnings

You can set the system to detect an A.9A0 warning (Overtravel) if overtravel occurs while the servo is ON. This allows the SERVOPACK to notify the host controller with a warning even when the overtravel signal is input only momentarily. An alarm occurs only if overtravel occurs while the servo is ON. An overtravel warning will not be detected when the servo is OFF, even if overtravel occurs.

Important
- The occurrence of an A.9A0 warning will not stop the motor or have any affect on host controller motion operations. The next step (e.g., the next motion or command) can be executed even if an overtravel warning exists.
  However, depending on the processing specifications and programming for warnings in the host controller, operation may be affected when an overtravel warning occurs (e.g., motion may stop or not stop). Confirm the specifications and programming in the host controller.
- When overtravel occurs, the SERVOPACK will perform stop processing for overtravel. Therefore, when an A.9A0 warning occurs, the servomotor may not reach the target position specified by the host controller. Check the feedback position to make sure that the axis is stopped at a safe position.

The following parameter is set for this function.

		Overtravel Warning Detection Selection (Speed / Pos / Trq)		When Enabled
Pn00D (200Dh)	n.X□□□	0 Default	Do not detect overtravel warnings.	Immediately
		1	Detect overtravel warnings.	
		2	Detect overtravel alarms.	

A timing chart for warning detection is provided below.

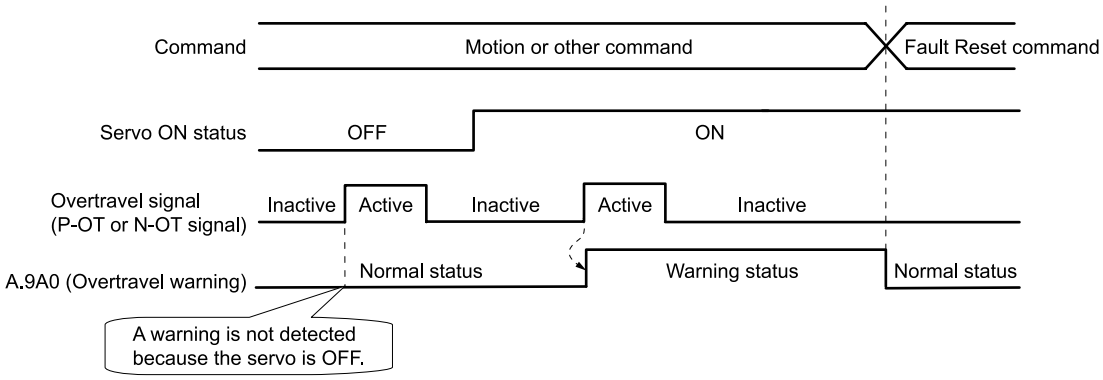

Information

- Warnings are detected for overtravel in the same direction as the reference.
- Warnings are not detected for overtravel in the opposite direction from the reference.
  Example: A warning will not be output for a forward reference even if the N-OT signal turns ON.
- If the travel command is 0, a warning will be detected with overtravel in either the forward or reverse direction.
- A warning will not be detected when the servo is turned ON even if overtravel status exists.
- You can use the Fault Reset command to clear the warning regardless of the servo ON/OFF status and overtravel signal status.
- If you clear the warning with the Fault Reset command during overtravel status, a warning will not be detected again until the overtravel status is left.
- Overtravel warnings are not detected during software limit detection.

5.10.6 Behavior Selection after Overtravel Release

The servomotor is stopped when overtravel occurs. In the overtravel state, movement is possible in the direction opposite to the previous direction of movement.

However, the servomotor may stop by overrunning the overtravel limit switch depending on the stopping method. In this case, the servomotor will not be in the overtravel state and normal operation is possible again when you turn ON the servo. Therefore, operation is also possible that exceeds the area in which movement is allowed, which may cause damage to the machine or other accidents.

To avoid this, you can limit the movement direction when the OT signal is turned OFF (limit switch was overrun) after overtravel occurs by setting Pn022 to n.□□□1.

		Overtravel Release Method Selection Speed Pos Trq		When Enabled
Pn022 (2022h)	n.□□□X	0 Default	Overtravel exists while the P-OT or N-OT signal is being input.	After restart
		1	Overtravel exists while the P-OT or N-OT signal is input and the current position of the workpiece is separated from the P-OT signal or N-OT signal.	

(1) When Pn022 is set to n.□□□0

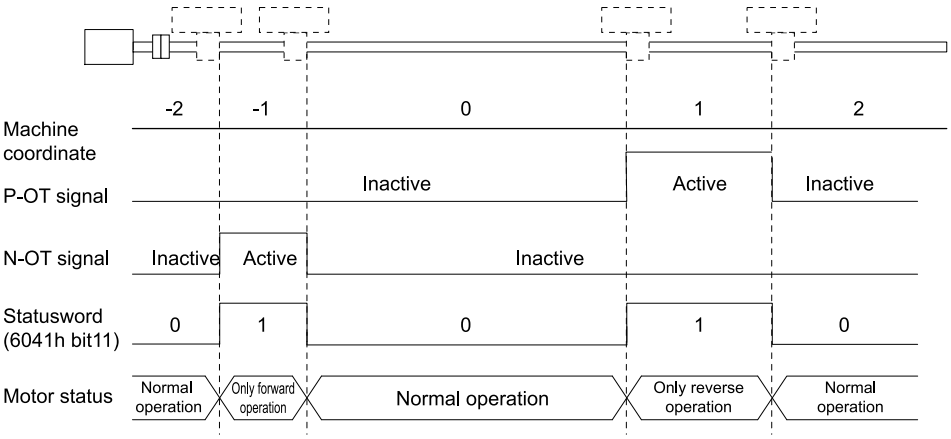

(2) When Pn022 is set to n.□□□1

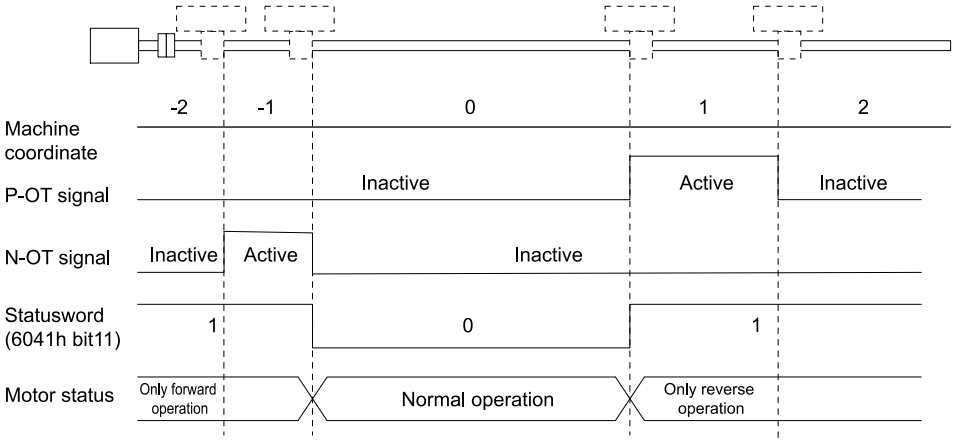

5.10.7 Overtravel Status

If an overtravel signal is input, the following SERVOPACK status will change to 1 and the servomotor will be stopped according to the overtravel stopping method set in Pn001. When the overtravel signal is reset, the status changes to 0.

Internal limit active (bit 11) in Statusword (6041h)

Negative limit switch (bit 0) or Positive limit switch (bit 1) in Digital Inputs (60FDh)

5.10.8 Overtravel Operation by Mode

Operation Mode	Operation
Profile Position Mode	• If an overtravel signal is input, the positioning operation to the current target position will be canceled and, after the motor stops, Target Reached in Statusword will be reset. • A positioning operation (return operation) is started only when a movement reference to a target position in the opposite direction from the overtravel signal is specified in the current Position Actual Value (e.g., a negative movement reference if the P-OT signal is input).
Homing Mode	• For Homing Method 1, 11, 12, 13, 14, 28, or 34: If the P-OT signal is input, Homing Error (bit 13) in Statusword (6041h) changes to 1 and the homing operation is canceled. • For Homing Method 2, 7, 8, 9, 10, 24, or 33: If the N-OT signal is input, Homing Error (bit 13) in Statusword (6041h) changes to 1 and the homing operation is canceled.
Interpolated Position Mode, Cyclic Synchronous Position Mode	• If an overtravel signal is input, the positioning operation to the current target position will be canceled and, after the motor stops, Target Reached in Statusword will be reset. • A positioning operation (return operation) is started only when a movement reference to a target position in the opposite direction from the overtravel signal is specified in the current Position Actual Value (e.g., a negative movement reference if the P-OT signal is input).
Profile Velocity Mode, Cyclic Synchronous Velocity Mode	During overtravel, the motor is operated only when a speed in the direction opposite from the overtravel signal is specified (e.g., a negative target speed when the P-OT signal is input).
Profile Torque Mode, Cyclic Synchronous Torque Mode	During overtravel, torque is applied only when a torque in the direction opposite from the overtravel signal is specified (e.g., a negative torque when the P-OT signal is input).

5.11 Holding Brake

A holding brake is used to hold the position of the moving part of the machine when the SERVOPACK is turned OFF so that moving part does not move due to gravity or an external force. You can use the brake that is built into a servomotor with a brake, or you can provide one on the machine.

The holding brake is used in the following cases.

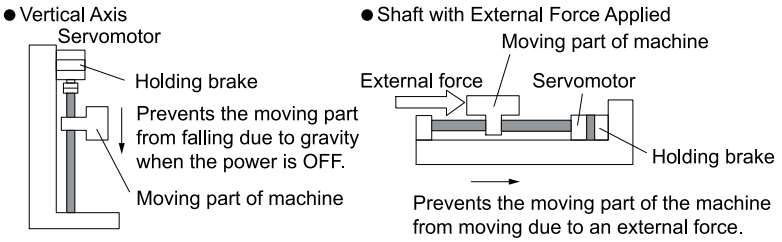

> **Important**
> The brake built into a servomotor with a brake is a de-energization brake. It is used only to hold the servomotor and cannot be used for braking. Use the holding brake only to hold a servomotor that is already stopped.

5.11.1 Brake Operating Sequence

You must consider the brake release delay time and the brake operation delay time to determine the brake operation timing, as described below.

> **Term**
> **Brake Release Delay Time :**
> The time from when the /BK (Brake Output) signal is turned ON until the brake is actually released.
> **Brake Operation Delay Time :**
> The time from when the /BK (Brake Output) signal is turned OFF until the brake actually operates.

Information /BK (Brake Output) can also be controlled from object 60FEh (Digital Outputs).
Refer to the following section for details.
☞ *15.16.2 Digital Outputs (60FEh) on page 688*

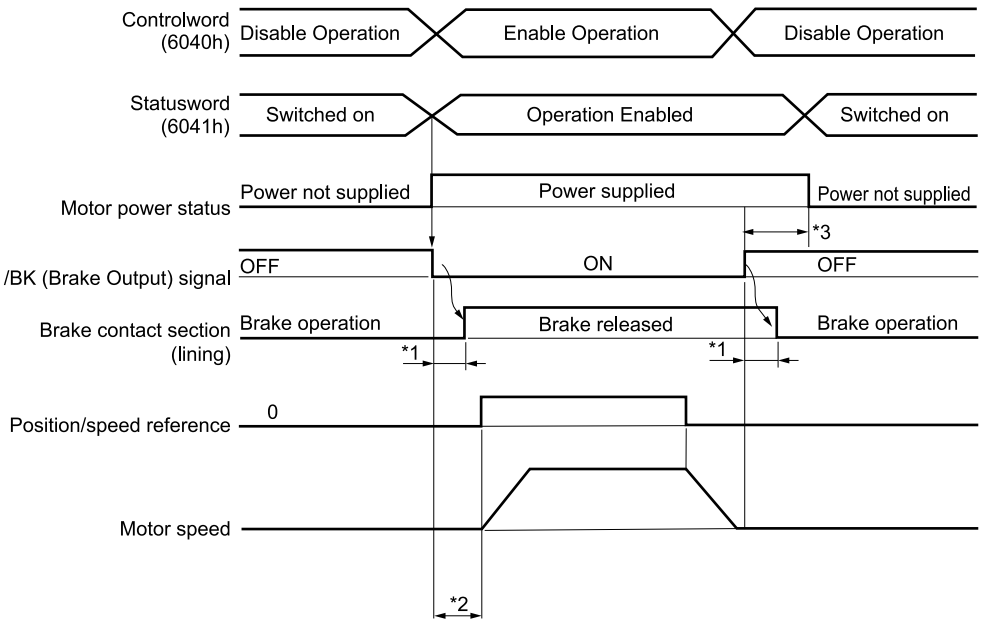

*1 Rotary servomotors: The brake delay times for servomotors with holding brakes are given in the following table. The operation delay times in the following table are examples for when the power is switched on the DC side. You must evaluate the actual brake delay times on the actual equipment before using the application.

Model	Voltage	Brake Release Delay Time [ms]	Brake Operation Delay Time [ms]
SGMXJ-A5 to -04	24 VDC	60	100
SGMXJ-06, -08		80	
SGMXA-A5 to -04		60	
SGMXA-06 to -10		80	
SGMXA-15 to -25		170	80
SGMXA-30 to -70		100	
SGMXP-01		20	100
SGMXP-02, -04		40	
SGMXP-08, -15		20	
SGMXG-03 to -20		100	80
SGMXG-30 to -44		170	100
SGMXG-55 to -1A			80
SGMXG-1E		250	
SGM7M-A1 to -A3		60	100

Linear servomotors: The brake delay times depend on the brake that you use. Set the parameters related to /BK signal output timing according to the delay times for the brake that you will actually use.

*2 Before you output a reference from the host controller to the SERVOPACK, wait for at least 50 ms plus the brake release delay time after you send the Servo ON command (Enable Operation command).

*3 Use the following parameters to set the timing of when the brake will operate and when the servo will be turned OFF.

- Rotary servomotors: Pn506 (Brake Reference-Servo OFF Delay Time), Pn507 (Brake Reference Output Speed Level), and Pn508 (Servo OFF-Brake Command Waiting Time)
- Linear servomotors: Pn506 (Brake Reference-Servo OFF Delay Time), Pn508 (Servo OFF-Brake Command Waiting Time), and Pn583 (Brake Reference Output Speed Level)

(1) Connection Example

Refer to the following section for information on brake wiring.

☞ *4.4.4 Wiring the SERVOPACK to the Holding Brake on page 152*

5.11.2 /BK (Brake Output) Signal

The following settings are for the output signal that controls the brake.

The /BK signal is turned OFF (to operate the brake) when the servo is turned OFF or when an alarm is detected. You can adjust the timing of brake operation (i.e., the timing of turning OFF the /BK signal) with the setting of Pn506 (Servo OFF Delay Time).

Type	Signal	Connector Pin No.	Signal Status	Meaning
Output	/BK	CN1-1, CN1-2	ON (closed)	Releases the brake.
			OFF (open)	Activates the brake.

Information The /BK signal will remain ON during overtravel. The brake will not be applied.

Note:

You can change the allocation of the /BK signal. To change the allocation, the parameters that you use depend on the allocation method.

Allocation Method	Parameter to Use
Σ-7S-compatible I/O Signal Allocation	• Pn50A = n.□□□1 (use Σ-7S-compatible I/O signal allocations) • Pn50F = n.X□□□ (/WARN (Warning Output) Signal Allocation)
Σ-LINK II Input Signal Allocation	• Pn50A = n.□□□2 (use Σ-LINK II input signal allocations) • Pn5B7 (/WARN (Warning Output) Signal Allocation)

Refer to the following section for details.

☞ *6.1.4 Output Signal Allocations on page 234*

Important

If you allocate more than one signal to the same output connector pin, a logical OR of the signals is output. Allocate the BK signal to its own output connector pin, i.e., do not use the same output terminal for another signal. For example, never allocate the /TGON (Rotation Detection Output) signal and /BK signal to the same output connector pin. If you did so, the /TGON signal would be turned ON by the falling speed on a vertical axis, and the brake would not operate.

5.11.3 Output Timing of /BK (Brake Output) Signal When the Servomotor Is Stopped

When the servomotor is stopped, the /BK signal turns OFF as soon as the Servo OFF command (Disable Operation command) is received. Use Pn506 (Servo OFF Delay Time) to change the timing to turn OFF power to the motor after the Servo OFF command (Disable Operation command) is input.

Pn506 (2506h)	Brake Reference-Servo OFF Delay Time			Speed Pos Trq
	Setting Range	Setting Unit	Default Setting	When Enabled
	0 to 50	10 ms	0	Immediately

- When the servomotor is used to control a vertical axis, the machine moving part may move slightly due to gravity or an external force. You can eliminate this slight motion by setting the Pn506 (Servo OFF Delay Time) so that power to the motor is stopped after the brake is applied.
- This parameter sets the timing of stopping power to the servomotor while the servomotor is stopped.

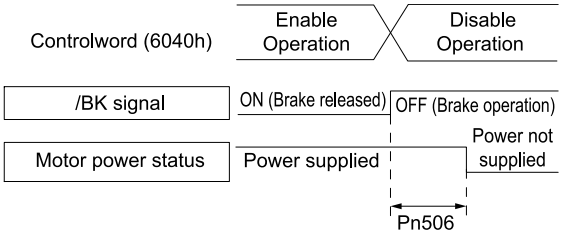

Important

Power to the servomotor will be stopped immediately when an alarm occurs, regardless of the setting of this parameter. The machine moving part may move due to gravity or an external force before the brake is applied.

5.11.4 Output Timing of /BK (Brake Output) Signal When the Servomotor Is Operating

If an alarm occurs while the servomotor is operating, the servomotor will start stopping and the /BK signal will be turned OFF. You can adjust the timing of /BK signal output by setting Pn508 (Servo OFF-Brake Command Waiting Time) and either Pn507 (Rotary Servomotor Brake Reference Output Speed Level) or Pn583 (Linear Servomotor Brake Reference Output Speed Level).

Note:

If zero-speed stopping is set as the stopping method for alarms, the setting of Pn506 (Brake Reference- Servo OFF Delay Time) is used after the motor stops.

- Rotary Servomotors

Pn507 (2507h)	Brake Reference Output Speed Level			Speed Pos Trq
	Setting Range	Setting Unit	Default Setting	When Enabled
	0 to 10000	1 min^{-1}	100	Immediately
Pn508 (2508h)	Servo OFF-Brake Command Waiting Time			Speed Pos Trq
	Setting Range	Setting Unit	Default Setting	When Enabled
	10 to 100	10 ms	50	Immediately

- Linear Servomotors

Pn583 (2583h)	Brake Reference Output Speed Level			Speed Pos Trq
	Setting Range	Setting Unit	Default Setting	When Enabled
	0 to 10000	1 mm/s	10	Immediately
Pn508 (2508h)	Servo OFF-Brake Command Waiting Time			Speed Pos Trq
	Setting Range	Setting Unit	Default Setting	When Enabled
	10 to 100	10 ms	50	Immediately

The brake operates when either of the following conditions is satisfied:

- When the Motor Speed Goes below the Level Set in Pn507 for a Rotary Servomotor or in Pn583 for a Linear Servomotor after the Power to the Motor Is Stopped

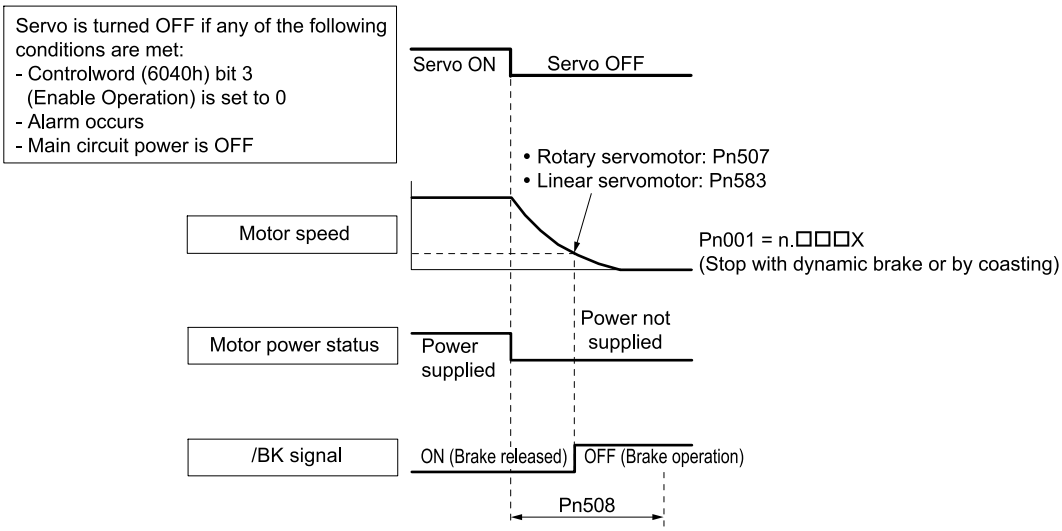

- When the Time Set In Pn508 Elapses after the Power to the Motor Is Stopped

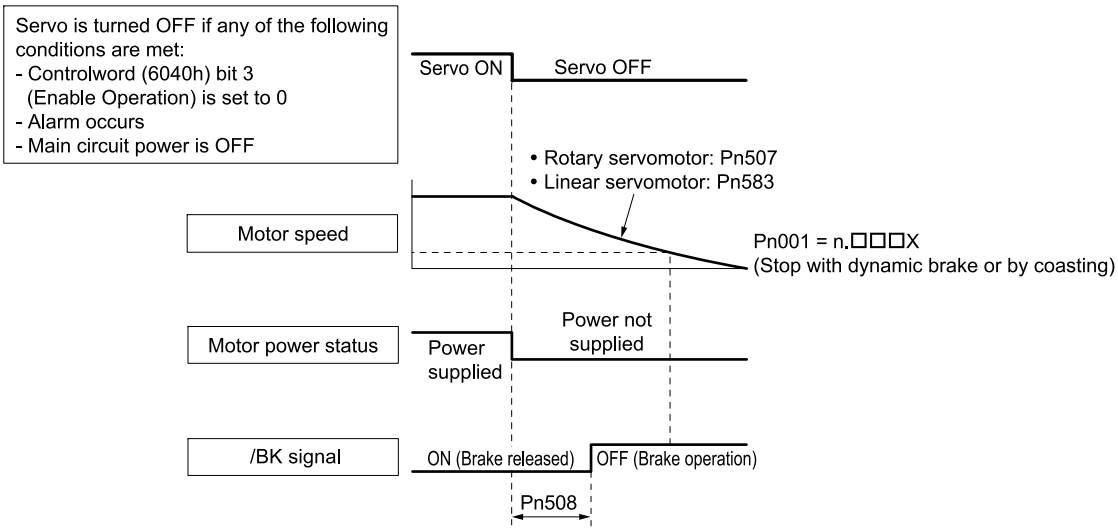

Important

The servomotor will be limited to its maximum speed even if a value higher than its maximum speed is set in Pn507 (Rotary Servomotor Brake Reference Output Speed Level) or Pn583 (Linear Servomotor Brake Reference Output Speed Level).

5.12 Motor Stopping Methods for Servo OFF and Alarms

You can use the following methods to stop the servomotor when the servo is turned OFF or an alarm occurs. There are the following four stopping methods.

Motor Stopping Method	Meaning
Stop with Dynamic Brake (DB)	The electric circuits are internally connected to stop the servomotor quickly.
Coast to a Stop	The motor stops naturally due to friction during operation.
Zero-speed Stop	The speed reference is set to 0 to stop the servomotor quickly.
Decelerate to a Stop	Emergency stop torque is used to decelerate the motor to a stop.

There are the following three conditions after stopping.

Status after Stopping	Meaning
Dynamic Brake Applied	The electric circuits are internally connected to hold the servomotor.
Coasting	The SERVOPACK does not control the servomotor. (The machine will move in response to a force from the load.)
Zero Clamping	A position loop is created and the servomotor remains stopped at a position reference of 0. (The current stop position is held.)

Important

- The dynamic brake is used for emergency stops. The dynamic brake circuit will operate frequently if the power is turned ON and OFF or the servo is turned ON and OFF while a reference input is applied to start and stop the servomotor. This may result in deterioration of the internal elements in the SERVOPACK. Use speed input references or position references to start and stop the servomotor.
- If you turn OFF the main circuit power or control power during operation before you turn OFF the servo, the servomotor stopping method depends on the SERVOPACK model as shown in the following table.

Condition	Servomotor Stopping Method	
	SGDXS-R70A, -1R6A, -2R8A, -3R8A, -5R5A, -7R6A, -120A, -180A, -200A, -□□□D	SGDXS-330A, -470A, -550A, -590A, -780A
Main circuit power turned OFF before turning OFF the servo	Stop with dynamic brake	
Control power turned OFF before turning OFF the servo	Stop with dynamic brake	Coast to a stop

- If the servomotor must be stopped by coasting rather than with the dynamic brake when the main circuit power or the control power is turned OFF before the servo is turned OFF, use a SERVOPACK with the dynamic brake option.
- To minimize the coasting distance of the servomotor to come to a stop when an alarm occurs, zero-speed stopping is the default method for alarms to which it is applicable. However, depending on the application, stopping with the dynamic brake may be more suitable than zero-speed stopping.
  For example, when coupling two shafts (twin-drive operation), machine damage may occur if a zero-speed stopping alarm occurs for one of the coupled shafts and the other shaft stops with a dynamic brake. In such cases, change the stopping method to the dynamic brake.

5.12.1 Stopping Method for Servo OFF

Set the stopping method for when the servo is turned OFF in Pn001 = n.□□□X (Motor Stopping Method for Servo OFF and Group 1 Alarms).

Parameter		Servomotor Stopping Method	Status after Servomotor Stops	When Enabled
Pn001 (2001h)	**n.□□□0 (default setting)**	Dynamic brake *1	Dynamic brake *1	After restart
	n.□□□1		Coasting	
	n.□□□2	Coasting	Coasting	

*1 The servomotor will coast to a stop when the SERVOPACK is not equipped with a built-in dynamic brake resistor or an external dynamic brake resistor is not connected.

Note:

If Pn001 is set to n.□□□0 (stop the motor by applying the dynamic brake) and the servomotor is stopped or operates at a low speed, braking force may not be generated, just like it is not generated for coasting to a stop.

5.12.2 Servomotor Stopping Method for Alarms

There are two types of alarms, group 1 (Gr. 1) alarms and group 2 (Gr. 2) alarms. A different parameter is used to set the stopping method for alarms for each alarm type.

Refer to the following section to see which alarms are in group 1 and which are in group 2.

☞ *16.2.1 List of Alarms on page 698*

(1) Motor Stopping Method for Group 1 Alarms

When a group 1 alarm occurs, the servomotor will stop according to the setting of Pn001 = n.□□□X. The default setting is to stop by applying the dynamic brake.

Refer to the following section for details.

☞ *5.12.1 Stopping Method for Servo OFF on page 204*

(2) Motor Stopping Method for Group 2 Alarms

When a group 2 alarm occurs, the servomotor will stop according to the settings of the following three parameters. The default setting is for zero clamping.

- Pn001 = n.□□□X (Motor Stopping Method for Servo OFF and Group 1 Alarms)
- Pn00A = n.□□□X (Motor Stopping Method for Group 2 Alarms)
- Pn00B = n.□□X□ (Motor Stopping Method for Group 2 Alarms)

However, during torque control, the group 1 stopping method is always used. If you set Pn00B to n.□□1□ (apply dynamic brake or coast servomotor to a stop), you can use the same stopping method as group 1. If you are coordinating a number of servomotors, you can use this stopping method to prevent machine damage that may result because of differences in the stopping method.

The following table shows the combinations of the parameter settings and the resulting stopping methods.

Parameter			Servomotor Stopping Method	Status after Servomotor Stops	When Enabled
Pn00B (200Bh)	Pn00A (200Ah)	Pn001 (2001h)			
n.□□0□ (default setting)	–	n.□□□0 (default setting)	Zero-speed stopping	Dynamic brake	After restart
		n.□□□1		Coasting	
		n.□□□2			
n.□□1□	–	n.□□□0 (default setting)	Dynamic brake	Dynamic brake	
		n.□□□1		Coasting	
		n.□□□2	Coasting		
n.□□2□	n.□□□0	n.□□□0 (default setting)	Dynamic brake	Dynamic brake	
		n.□□□1		Coasting	
		n.□□□2	Coasting		
	n.□□□1 (default setting)	n.□□□0 (default setting)	Motor is decelerated using the torque set in Pn406 (2406h) as the maximum torque.	Dynamic brake	
		n.□□□1		Coasting	
		n.□□□2			
	n.□□□2	n.□□□0 (default setting)		Coasting	
		n.□□□1			
		n.□□□2			
	n.□□□3	n.□□□0 (default setting)	Motor is decelerated according to setting of Pn30A (230Ah).	Dynamic brake	
		n.□□□1		Coasting	
		n.□□□2			
	n.□□□4	n.□□□0 (default setting)		Coasting	
		n.□□□1			
		n.□□□2			

Note:

1. The setting of Pn00A is ignored if Pn00B is set to n.□□0□ or n.□□1□.
2. The setting of Pn00A = n.□□□X is enabled for position control and speed control. During torque control, the setting of Pn00A = n.□□□X will be ignored and only the setting of Pn001 = n.□□□X will be used.
3. Refer to the following section for details on Pn406 (Emergency Stop Torque).
   ☞ *(1) Stopping the Servomotor by Setting Emergency Stop Torque on page 195*
4. Refer to the following section for details on Pn30A (Deceleration Time for Servo OFF and Forced Stops).
   ☞ *(2) Stopping the Servomotor by Setting the Deceleration Time on page 196*

5.13 Motor Overload Detection Level

The motor overload detection level is the threshold used to detect overload alarms and overload warnings when the servomotor is subjected to a continuous load that exceeds the servomotor ratings.

It is designed to prevent servomotor overheating.

You can change the detection timing for A.910 warnings (Overload) and A.720 alarms (Continuous Overload). You cannot change the detection level for A.710 alarms (Instantaneous Overload).

5.13.1 Detection Timing for Overload Warnings (A.910)

With the default setting for overload warnings, an overload warning is detected in 20% of the time required to detect an overload alarm. You can change the time required to detect an overload warning by changing the setting of Pn52B (Overload Warning Level). You can increase safety by using overload warning detection as an overload protection function matched to the system.

The following graph shows an example of the detection of overload warnings when the setting of Pn52B (Overload Warning Level) is changed from 20% to 50%. An overload warning is detected in half of the time required to detect an overload alarm.

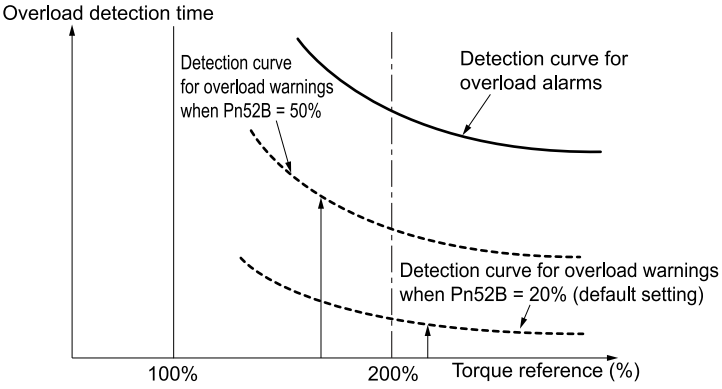

Pn52B (252Bh)	Overload Warning Level			Speed Pos Trq
	Setting Range	Setting Unit	Default Setting	When Enabled
	1 to 100	1%	20	Immediately

5.13.2 Detection Timing for Overload Alarms (A.720)

If servomotor heat dissipation is insufficient (e.g., if the heat sink is too small), you can lower the overload alarm detection level to help prevent overheating.

To reduce the overload alarm detection level, change the setting of Pn52C (Base Current Derating at Motor Overload Detection).

Pn52C (252Ch)	Base Current Derating at Motor Overload Detection			Speed Pos Trq
	Setting Range	Setting Unit	Default Setting	When Enabled
	10 to 100	1%	100	After restart

An A.720 alarm (Continuous Overload) can be detected earlier to protect the servomotor from overloading.

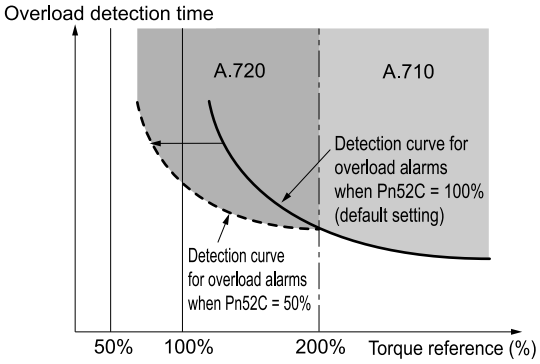

Note:

The gray areas in the above graph show where A.710 and A.720 alarms occur.

Refer to the relevant manual given below for a diagram that shows the relationships between the servomotor heat dissipation conditions (heat sink size, surrounding air temperature, and derating). You can protect the servomotor from overloads more effectively by setting this derating value in Pn52C.

- Σ-X-Series Rotary Servomotor Product Manual (Manual No.: SIEP C230210 00)
- Σ-7-Series Linear Servomotor Product Manual (Manual No.: SIEP S800001 37)
- Σ-7-Series Direct Drive Servomotor Product Manual (Manual No.: SIEP S800001 38)

5.14 Setting Unit Systems

You can set the SERVOPACK reference units with EtherCAT communications. You can set the following four reference units with EtherCAT communications.

- Position Reference Unit
- Speed Reference Unit
- Acceleration Reference Unit
- Torque Reference Unit

The setting procedures are given below.

5.14.1 Position Reference Unit Setting

Set the position reference unit in Position User Unit (2701h). The position reference unit setting will be used for the electronic gear ratio setting.

> **Important**
> Set the position reference unit within the following range.
> 0.001 ≤ Position User Unit: Numerator (2701h: 1)/ Position User Unit: Denominator (2701h: 2) ≤ 64000
> If the setting range is exceeded, 040h (Parameter Setting Error) will occur.

Index	Subindex	Name	Data Type	Access	PDO Mapping	Value	Saving to EEPROM
2701h	0	Number of entries	USINT	RO	No	2	No
	1	Numerator	UDINT	RW	No	1 to 1073741824 (default: 64)	Yes
	2	Denominator	UDINT	RW	No	1 to 1073741824 (default: 1)	Yes

Note:

Refer to the following section for information on Position User Unit (2701h).

☞ *15.5.3 Position User Unit (2701h) on page 647*

The minimum unit of the position data that is used to move a load is called the reference unit. The reference unit is used to give travel amounts, not in pulses, but rather in distances or other physical units (such as µm or °) that are easier to understand.

The electronic gear is used to convert the travel amounts that are specified in reference units to pulses, which are required for actual movements.

With the electronic gear, one reference unit is equal to the workpiece travel amount per reference pulse input to the SERVOPACK. In other words, if you use the SERVOPACK's electronic gear, pulses can be read as reference units.

> **Important**
> If you set an electronic gear in the host controller, ensure that the SERVOPACK electronic gear ratio is set according to the specifications in the host controller.

The difference between using and not using the electronic gear is shown below.

- For Rotary Servomotors
  In this example, the following machine configuration is used to move the workpiece 10 mm.

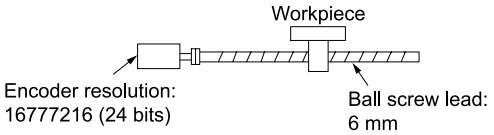

When the Electronic Gear Is Not Used

To move a workpiece 10 mm:
(1) Calculate the number of rotations.
The servomotor will move 6 mm for each rotation, so 10/6 rotations are required to move 10 mm.
(2) Calculate the required number of reference pulses.
One rotation is 67108864 pulses. Therefore, "10/6 × 67108864 = 111848106.66... pulses"
(3) Input 111848107 pulses as the reference.

Calculating the number of reference pulses for each reference is necessary. = Troublesome

When the Electronic Gear Is Used

If you use reference units to move the workpiece 10 mm, when the reference unit is set to 1 μm, the travel amount is 1 μm per pulse.
To move the workpiece 10 mm (10000 μm), 10000 ÷ 1 = 10000 pulses, so 10000 pulses would be input.

Calculating the number of reference pulses for each reference is not necessary. = Simple

- Linear Servomotors
  In this example, the following machine configuration is used to move the load 10 mm. We'll assume that the resolution of the serial converter unit is 256 and that the linear encoder scale pitch is 20 μm.

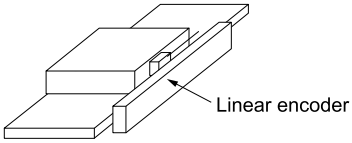

When the Electronic Gear Is Not Used

To move the load 10 mm:
10 × 1000 ÷ 20 × 256 = 128000 pulses, so 128000 pulses is input as the reference.

Calculating the number of reference pulses for each reference is necessary. = Troublesome

When the Electronic Gear Is Used

To move the load 10 mm using reference units:
When the reference unit is set to 1 μm, the travel amount is 1 μm per pulse.
To move the load 10 mm (10000 μm), 10000/1 = 10000 pulses, so 10000 pulses is input as the reference.

Calculating the number of reference pulses for each reference is not necessary. = Simple

(1) Calculating the Settings for the Electronic Gear Ratio

(a) Rotary Servomotors

If the gear ratio between the servomotor shaft and the load is given as n/m, where n is the number of load rotations for m servomotor shaft rotations, the settings for the electronic gear ratio can be calculated as follows:

$$\text{Electronic gear ratio } \frac{B}{A} = \frac{\text{Numerator}}{\text{Denominator}} = \frac{\text{Encoder resolution}}{\text{Travel amount per load shaft rotation (reference unit)}} \times \frac{m}{n}$$

◆ Encoder Resolution

You can check the encoder resolution in the servomotor model number and with Pn21D = n.□□X□.

- When Pn21D is set to n.□□□0 (disable encoder bit count compatibility)
  You can check the encoder resolution in the servomotor model number. The encoder resolutions are given next.

Servomotor Model	Code for ■ in Interpreting Servomotor Model Number	Specification	Encoder Resolution
SGMXJ-□□□■□□□□□	U	26 bits (absolute encoder)	67108864
SGMXA-□□□■□□□□□ SGMXP-□□□■□□□□□ SGMXG-□□□■□□□□□	W	26 bits (batteryless absolute encoder)	
SGM7M-□□□■□□□□□	3	20 bits (absolute encoder)	1048576
SGM7D-□□□■□□□□□	7	24 bits (multiturn absolute encoder)	16777216
SGM7E-□□□■□□□□□ SGM7F-□□□■□□□□□	F	24 bits (incremental encoder)	

Information With fully-closed loop control, the number of external encoder pulses per motor rotation is the encoder resolution.

- When Pn21D is set to n.□□□1 (enable encoder bit count compatibility)
  Calculate the encoder resolution with "$2^{\text{Number of bits set in Pn21D = n.□□X□}}$".

		Encoder Resolution Compatibility: Resolution Selection Speed Pos Trq		When Enabled
Pn21D (221Dh)	n.□□X□	4	Operate as 20-bit encoder.	After restart
		6	Operate as 22-bit encoder.	
		8 Default	Operate as 24-bit encoder.	
		A	Operate as 26-bit encoder.	
		Other values	Reserved (Do not use.)	

Refer to the following section for details on Pn21D.

☞ *5.18.1 Setting the Encoder Resolution Compatibility Selection on page 225*

(b) Linear Servomotors

You can calculate the settings for the electronic gear ratio with the following equation:

- When Not Using a Serial Converter Unit

$$\text{Electronic gear ratio } \frac{B}{A} = \frac{\text{Numerator}}{\text{Denominator}} = \frac{\text{Travel amount per reference unit (reference units)} \times \text{Number of divisions of the linear encoder}}{\text{Linear encoder scale pitch (setting in the following table)}}$$

- When Using a Serial Converter Unit

$$\text{Electronic gear ratio } \frac{B}{A} = \frac{\text{Numerator}}{\text{Denominator}} = \frac{\text{Travel amount per reference unit (reference units)} \times \text{Number of divisions of the serial converter unit}}{\text{Linear encoder scale pitch (setting of Pn282)}}$$

◆ Feedback Resolution of Linear Encoder: Incremental Linear Encoder

The incremental linear encoder scale pitches and resolutions are given in the following table.

Calculate the electronic gear ratio using the values in the following table.

Manufacturer	Linear Encoder Model	Linear Encoder Scale Pitch [µm] *1	Relay Device between SERVOPACK and Linear Encoder	Resolution	Resolution
Dr. JOHANNES HEIDENHAIN GmbH	LIDA48□	20	JZDP-H003-□□□-E *2	256	0.078 µm
			JZDP-J003-□□□-E *2	4096	0.0049 µm
	LIF48□	4	JZDP-H003-□□□-E *2	256	0.016 µm
			JZDP-J003-□□□-E *2	4096	0.00098 µm
Renishaw PLC	RGH22B	20	JZDP-H005-□□□-E *2	256	0.078 µm
			JZDP-J005-□□□-E *2	4096	0.0049 µm
Magnescale Co., Ltd.	SR75-□□□□□LF *3	80	–	8192	0.0098 µm
	SR75-□□□□□MF	80	–	1024	0.078 µm
	SR85-□□□□□LF *3	80	–	8192	0.0098 µm
	SR85-□□□□□MF	80	–	1024	0.078 µm
	SL700 *3, SL710 *3, SL720 *3, SL730 *3	800	PL101-RY *4	8192	0.0977 µm
			MJ620-T13 *5		
	SQ10	400	MQ10-FLA *5	8192	0.0488 µm
			MQ10-GLA *5		
Canon Precision Inc.	PH03-36110	128	–	2048	0.0625 µm
	PH03-36120	128	–	2048	0.0625 µm

*1 These are reference values for setting SERVOPACK parameters. Contact the manufacturer for actual linear encoder scale pitches.
*2 This is the model of the serial converter unit.
*3 If you use an encoder pulse output with this linear encoder, the setting range of the encoder output resolution (Pn281) is restricted. Refer to the following section for details on the encoder output resolution (Pn281).
☞ *6.5.2 Setting for the Encoder Divided Pulse Output on page 252*
*4 This is the model of the head with interpolator.
*5 This is the model of the interpolator.

◆ Feedback Resolution of Linear Encoder: Absolute Linear Encoder

The absolute linear encoder scale pitches and resolutions are given in the following table.

Calculate the electronic gear ratio using the values in the following table.

Manufacturer	Linear Encoder Model	Linear Encoder Scale Pitch [µm] *1	Relay Device between SERVOPACK and Linear Encoder	Resolution	Resolution
Dr. JOHANNES HEIDENHAIN GmbH	LIC4190 Series	40.96	–	4096	0.01 µm
		20.48	–	4096	0.005 µm
		4.096	–	4096	0.001 µm
	LIC2190 Series	409.6	–	4096	0.1 µm
		204.8	–	4096	0.05 µm
	LC115	40.96	EIB3391Y *2	4096	0.01 µm
	LC415	40.96	EIB3391Y *2	4096	0.01 µm
RSF Elektronik GmbH	MC15Y Series	409.6	–	4096	0.1 µm
		204.8	–	4096	0.05 µm
Mitutoyo Corporation	ST781A/ST781AL	256	–	512	0.5 µm
	ST782A/ST782AL	256	–	512	0.5 µm
	ST783/ST783AL	51.2	–	512	0.1 µm
	ST784/ST784AL	51.2	–	512	0.1 µm
	ST788A/ST788AL	51.2	–	512	0.1 µm
	ST789A/ST789AL	25.6	–	512	0.05 µm
	ST1381	5.12	–	512	0.01 µm
	ST1382	0.512	–	512	0.001 µm
Renishaw PLC	EL36Y□□050F□□□	12.8	–	256	0.05 µm
	EL36Y□□100F□□□	25.6	–	256	0.1 µm
	EL36Y□□500F□□□	128	–	256	0.5 µm
	RL36Y□□050□□□□	12.8	–	256	0.05 µm
	RL36Y□□001□□□□	0.256	–	256	0.001 µm
RLS d.o.o.	LA11YA Series	2000	–	2048	0.9765 µm
		2000	–	4096	0.4882 µm
		2000	–	8192	0.2441 µm
Magnescale Co., Ltd.	SR77-□□□□□LF *3	80	–	8192	0.0098 µm
	SR77-□□□□□MF	80	–	1024	0.078 µm
	SR87-□□□□□LF *3	80	–	8192	0.0098 µm
	SR87-□□□□□MF	80	–	1024	0.078 µm
	SQ47/SQ57-□□□□□SF□□□□ SQ47/SQ57-□□□□□TF□□□	20.48	–	4096	0.005 µm
	SQ47/SQ57-□□□□□AF□□□ SQ47/SQ57-□□□□□FF□□□	40.96	–	4096	0.01 µm

Continued on next page.

Continued from previous page.

Manufacturer	Linear Encoder Model	Linear Encoder Scale Pitch [μm] *1	Relay Device between SERVOPACK and Linear Encoder	Resolution	Resolution
Fagor Automation S. Coop.	L2AK208	20	–	256	0.078 μm
	L2AK211	20	–	2048	0.0098 μm
	LAK209	40	–	512	0.078 μm
	LAK212	40	–	4096	0.0098 μm
	S2AK208	20	–	256	0.078 μm
	SV2AK208	20	–	256	0.078 μm
	G2AK208	20	–	256	0.078 μm
	S2AK211	20	–	2048	0.0098 μm
	SV2AK211	20	–	2048	0.0098 μm
	G2AK211	20	–	2048	0.0098 μm
Canon Precision Inc.	PH03-36E00	128	–	2048	0.0625 μm

*1 These are reference values for setting SERVOPACK parameters. Contact the manufacturer for actual linear encoder scale pitches.
*2 This is the model of the interpolator.
*3 If you use an encoder pulse output with this linear encoder, the setting range of Pn281 (Encoder Output Resolution) is restricted. Refer to the following section for details on Pn281 (Encoder Output Resolution).
☞ *6.5.2 Setting for the Encoder Divided Pulse Output on page 252*

Information **Resolution**

You can calculate the resolution that is used inside the SERVOPACK (i.e., the travel distance per feedback pulse) with the following formula.

$$\text{Resolution (travel amount per feedback pulse)} = \frac{\text{Linear encoder scale pitch}}{\text{Number of divisions of serial converter unit or linear encoder}}$$

The SERVOPACK uses feedback pulses as the unit to control a servomotor.

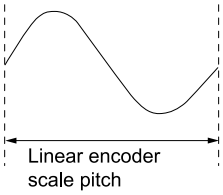

5.14.2 Electronic Gear Ratio Setting Examples

Setting examples are provided in this section.

(1) Rotary Servomotors

Step	Description	Machine Configuration		
		Ball Screw	**Rotary Table**	**Belt and Pulley**
		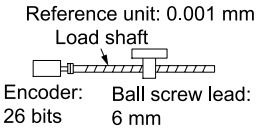	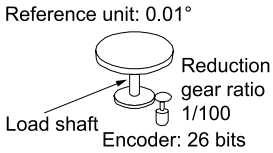	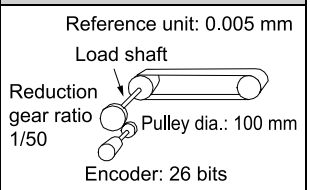
1	Machine Specifications	• Ball screw lead: 6 mm • Gear ratio: 1/1	• Rotational angle per revolution: 360° • Gear ratio: 1/100	• Pulley dia.: 100 mm (pulley circumference: 314 mm) • Gear ratio: 1/50
2	Encoder Resolution	67108864 (26 bits)	16777216 (24 bits) **Note:** Use Pn21D (Encoder Resolution Setting) to use 67108864 (26 bits) as 16777216 (24 bits).	
3	Reference Units	0.001 mm (1 μm)	0.01°	0.005 mm (5 μm)
4	Travel Distance per Load Shaft Revolution (Reference Units)	6 mm/0.001 mm = 6000	360°/0.01° = 36000	314 mm/0.005 mm = 62800
5	Electronic Gear Ratio	$\frac{B}{A} = \frac{67108864}{6000} \times \frac{1}{1}$	$\frac{B}{A} = \frac{16777216}{36000} \times \frac{100}{1}$	$\frac{B}{A} = \frac{16777216}{62800} \times \frac{50}{1}$
6	Position User Unit (2701h)	• Numerator = 67108864 • Denominator = 6000 • Pn21D = n.□□□0	• Numerator = 167772160 • Denominator = 36000 • Pn21D = n.□□81	• Numerator = 838860800 • Denominator = 62800 • Pn21D = n.□□81

(2) Linear Servomotors

A setting example for a Serial Converter Unit resolution of 256 is given below.

Step	Description	Machine Configuration
		Ball Screw
		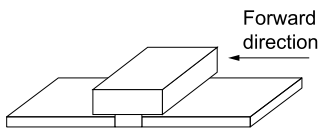
1	Linear Encoder Scale Pitch	0.02 mm (20 μm)
2	Reference Unit	0.001 mm (1 μm)
3	Electronic Gear Ratio	$\frac{B}{A} = \frac{1\ (\mu m)}{20\ (\mu m)} \times 256 \times \frac{1}{1}$
4	Position User Unit (2701h)	Numerator: 256
		Denominator: 20

5.14.3 Setting the Speed Reference Unit

Set the speed reference unit [Vel. Unit] in Velocity User Unit (2702h).

Index	Subindex	Name	Data Type	Access	PDO Mapping	Value	Saving to EEPROM
2702h	0	Number of entries	USINT	RO	No	2	No
	1	Numerator	UDINT	RW	No	1 to 1073741823 (default: 64)	Yes
	2	Denominator	UDINT	RW	No	1 to 1073741823 (default: 1)	Yes

Setting range: 1/256 ≤ Velocity User Unit: Numerator (2702h: 1)/Velocity User Unit: Denominator (2702h: 2) ≤ 33554432

If the setting range is exceeded, an A20h alarm (Parameter Setting Error) will occur.

Speed Reference Unit Setting Example (Electronic Gear Ratio Setting Example for a Ball Screw)

Velocity User Unit (2702h)

Converting one user-defined speed reference unit [0.1 mm/s] into [inc/s]:

1 [Vel unit]

$$= \frac{67108864\ [\text{inc}]}{6\ [\text{mm}]} \times 0.1\ [\text{mm/s}]$$

$$= \frac{67108864}{60}\ [\text{inc/s}]$$

Therefore, the objects are set as follows:

Object 2702h: 1 (Numerator) = 67108864

Object 2702h: 2 (Denominator) = 60

5.14.4 Setting the Acceleration Reference Unit

Set the acceleration reference unit [Acc. Unit] in Acceleration User Unit (2703h).

Index	Subindex	Name	Data Type	Access	PDO Mapping	Value	Saving to EEPROM
2703h	0	Number of entries	USINT	RO	No	2	No
	1	Numerator	UDINT	RW	No	1 to 1073741823 (default: 64)	Yes
	2	Denominator	UDINT	RW	No	1 to 1073741823 (default: 1)	Yes

Setting range: 1/256 ≤ Acceleration User Unit: Numerator (2703h: 1)/Acceleration User Unit: Denominator (2703h: 2) ≤ 1048576

If the setting range is exceeded, an A20h alarm (Parameter Setting Error) will occur.

Acceleration Reference Unit Setting Example (Electronic Gear Ratio Setting Example for a Ball Screw)

Acceleration User Unit (2703h)

Converting one user-defined acceleration reference unit [0.1 mm/s^2] into [10^4 inc/s^2]:

1 [Acc unit]

$$= \frac{67108864\ [\text{inc}]}{6\ [\text{mm}]} \times 0.1\ [\text{mm/s}^2] \times 10^{-4}$$

$$= \frac{67108864}{6 \times 10^5}\ [10^4\ \text{inc/s}^2]$$

Therefore, the objects are set as follows:

Object 2703h: 1 (Numerator) = 67108864

Object 2703h: 2 (Denominator) = 600000

5.14.5 Setting the Torque Reference Unit

Set the torque reference unit [Torque Unit] in Torque User Unit (2704h).

Index	Subindex	Name	Data Type	Access	PDO Mapping	Value	Saving to EEPROM
2704h	0	Number of entries	USINT	RO	No	2	No
	1	Numerator	UDINT	RW	No	1 to 1073741823 (default: 1)	Yes
	2	Denominator	UDINT	RW	No	1 to 1073741823 (default: 10)	Yes

Setting range: 1/256 ≤ Torque User Unit: Numerator (2704h: 1)/Torque User Unit: Denominator (2704h: 2) ≤ 1

Alarm A.A20 (Parameter Setting Error) will be detected if the setting exceeds the setting range.

5.15 Resetting the Absolute Encoder

In a system that uses an absolute encoder, the multiturn data must be reset at startup. An A.810 or A.820 alarm (alarm related to the absolute encoder) will occur when the absolute encoder must be reset, such as when the power is turned ON. When you reset the absolute encoder, the multiturn data is reset and any alarms related to the absolute encoder are cleared.

Reset the absolute encoder in the following cases.

- When an A.810 alarm (Encoder Backup Alarm) occurs
- When an A.820 alarm (Encoder Checksum Alarm) occurs
- When starting the system for the first time
- When you want to reset the multiturn data in the absolute encoder
- When the servomotor has been replaced

⚠ WARNING

The multiturn data will be reset to a value between -2 and +2 rotations when the absolute encoder is reset. The reference position of the machine system will change. Adjust the reference position in the host controller to the position that results from resetting the absolute encoder.

If the machine is started without adjusting the position in the host controller, unexpected operation may cause personal injury or damage to the machine.

Information

1. The multiturn data will always be zero in the following cases. It is never necessary to reset the absolute encoder in these cases. An A.810 or A.820 alarm (alarm related to the absolute encoder) will not occur.
   - When you use a single-turn absolute encoder
   - When Pn002 is set to n.□2□□ (use the encoder as a single-turn absolute encoder)
2. If a batteryless absolute encoder is used, an A.810 alarm (Encoder Backup Alarm) will occur the first time the power is turned ON. After you reset the absolute encoder, the A.810 alarm will no longer occur.

5.15.1 Precautions on Resetting

- You cannot use the Alarm/Warning Clear (Fault Reset) command from the SERVOPACK to clear the A.810 alarm (Encoder Backup Alarm) or the A.820 alarm (Encoder Checksum Alarm). Always use the operation to reset the absolute encoder to clear these alarms.
- If an A.8□□ alarm (internal encoder monitoring alarm) occurs, turn OFF the power to reset the alarm.

5.15.2 Preparations

Always check the following before you reset an absolute encoder.

- The parameters must not be write prohibited.
- The servo must be OFF.

5.15.3 Applicable Tools

The following table lists the tools that you can use to reset the absolute encoder.

Tool	Fn No./Function Name	Reference
Digital Operator	Fn008	Σ-7/Σ-X-Series Digital Operator Operating Manual (Manual No.: SIEP S800001 33)
SigmaWin+	[Encoder Setting] – [Reset Absolute Encoder]	*5.15.4 Operating Procedure on page 218*
EtherCAT Communications	SERVOPACK Adjusting Command (2710h)	*15.5.7 SERVOPACK Adjusting Command (2710h) on page 649*

5.15.4 Operating Procedure

Use the following procedure to reset the absolute encoder.

1. **Confirm that the servo is OFF.**
2. **Click the [ ] button for the servo drive in the workspace of the Main Window of the SigmaWin+.**
3. **Click [Reset Absolute Encoder] in the [Menu] window.**

   The [Absolute Encoder Reset] window will be displayed.
4. **Click the [Continue] button.**

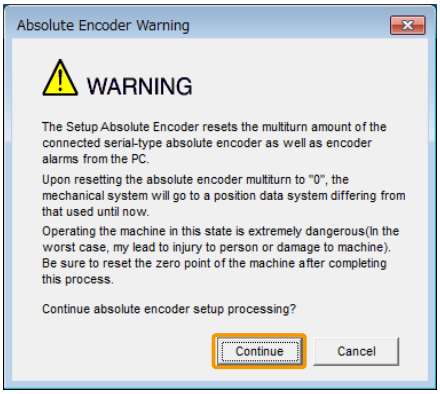

   Click the [Cancel] button to cancel resetting the absolute encoder. The Main Window will return.
5. **Click the [Execute setting] button.**

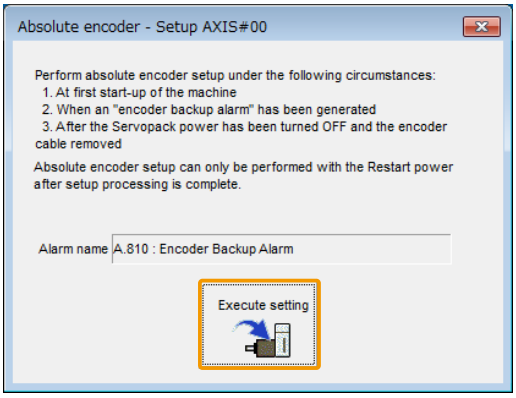

   The current alarm code and name will be displayed in the [Alarm name] box.
6. **Click the [Continue] button.**

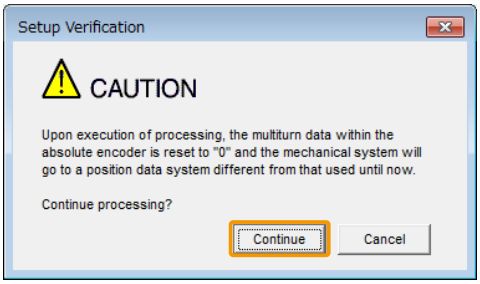

   Click the [Cancel] button to cancel resetting the absolute encoder. The previous window will return.
7. **Click the [OK] button.**

   The absolute encoder will be reset.

   When Resetting Fails

   If you attempted to reset the absolute encoder when the servo was ON in the SERVOPACK, the following message dialog box will be displayed and processing will be canceled.

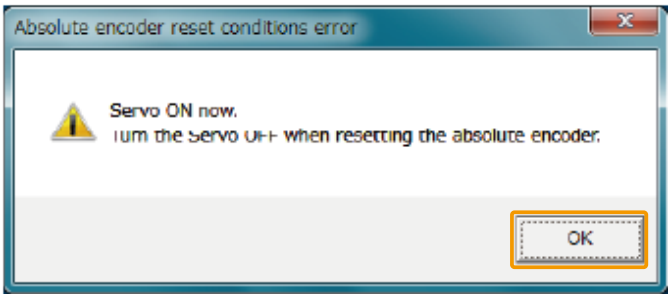

Click the [OK] button. The Main Window will return. Turn OFF the servo and repeat the procedure from step 1.

When Resetting Is Successful

The following message dialog box will be displayed when the absolute encoder has been reset.

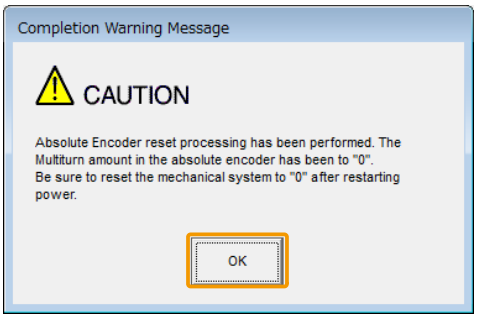

The Main Window will return.

8. **To enable changes to the settings, turn the power to the SERVOPACK OFF and ON again.**

This concludes the procedure to reset the absolute encoder.

5.16 Setting the Origin of the Absolute Encoder

5.16.1 Absolute Encoder Origin Offset

NOTICE

This parameter is set from the host controller. For details on when the host controller is an MP3000-series motion controller, refer to the motion control manual.

The origin offset of the absolute encoder is a correction that is used to set the origin of the machine coordinate system in addition to the origin of the absolute encoder. Set the offset between the absolute encoder origin and the machine coordinate system position in Home Offset (607Ch).

The offset is added to Position Actual Value (6064h) after the parameters are enabled when the power is turned ON or with User Parameter Configuration (2700h).

Index	Subindex	Name	Data Type	Access	PDO Mapping	Value	Saving to EEPROM
607Ch	–	Home Offset	DINT	RW	No	-536870912 to 536870911 (default: 0) [Pos. unit]	Yes

If the encoder position (X) is at the origin (0), then Home Offset (607Ch) would be set to the value of "-X."

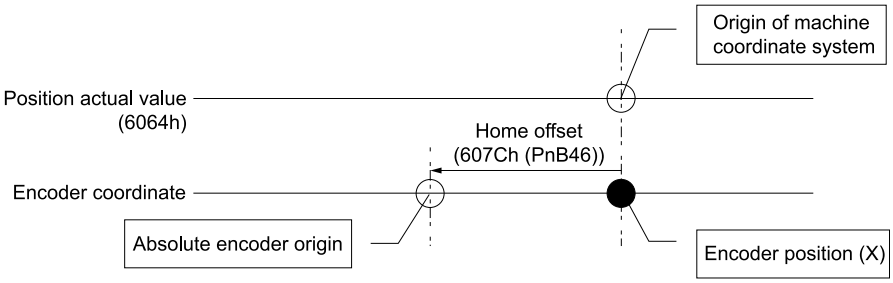

5.16.2 Setting the Origin of the Absolute Linear Encoder

You can set any position as the origin in the following linear encoders.

- Dr. JOHANNES HEIDENHAIN GmbH
  LIC4190 Series or LIC2190 Series
- RSF Elektronik GmbH
  MC15Y Series
- Mitutoyo Corporation
  ABS ST780A Series or ST1300 Series
  Models: ABS ST78□A/ST78□AL/ST13□□
- Renishaw PLC
  EVOLUTE Series
  Models: EL36Y□□□□□□□□□
- Renishaw PLC
  RESOLUTE Series
  Models: RL36Y□□□□□□□□□
- Canon Precision Inc.
  Model: PH03-36E00

Important
- After you set the origin, the /S-RDY (Servo Ready Output) signal will become inactive because the system position data was changed. Always turn the SERVOPACK power OFF and ON again.
- After you set the origin, the servomotor phase data in the SERVOPACK will be discarded. If you are using a linear servomotor without a polarity sensor, execute polarity detection again to save the servomotor phase data in the SERVOPACK.

(1) Preparations

Always check the following before you set the origin of an absolute linear encoder.

- The parameters must not be write prohibited.
- The servo must be OFF.

(2) Applicable Tools

The following table lists the tools that you can use to set the origin of the absolute linear encoder.

Tool	Fn No./Function Name	Reference
Digital Operator	Fn020	Σ-7/Σ-X-Series Digital Operator Operating Manual (Manual No.: SIEP S800001 33)
SigmaWin+	[Encoder Setting] – [Zero Point Position Setting]	*(3) Operating Procedure on page 221*

(3) Operating Procedure

Use the following procedure to set the origin of an absolute linear encoder.

1. **Click the [ ] button for the servo drive in the workspace of the Main Window of the SigmaWin+.**
2. **Click [Zero Point Position Setting] in the [Menu] window.**

   The [Set Origin] window will be displayed.
3. **Click the [Continue] button.**

4. **Click the [Execute] button.**

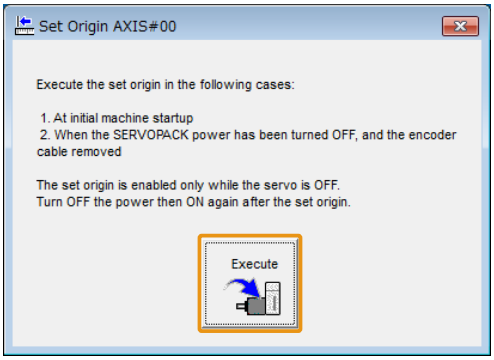

5. **Click the [Continue] button.**

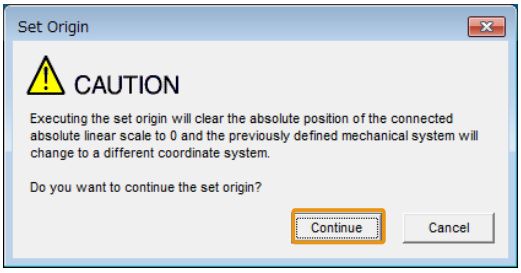

Click the [Cancel] button to cancel setting the origin of the absolute linear encoder. The previous window will return.

6. **Click the [OK] button.**

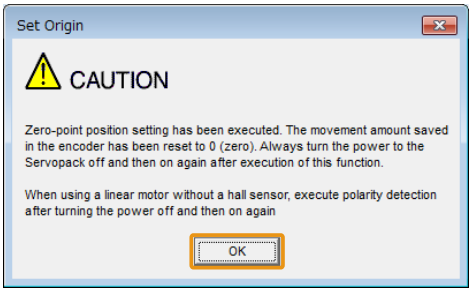

7. **Turn the power to the SERVOPACK OFF and ON again.**

8. **If you use a linear servomotor that does not have a polarity sensor, perform polarity detection.**

   Refer to the following section for details on the polarity detection.

   ☞ *5.9 Polarity Detection on page 191*

This concludes the procedure to set the origin of the absolute linear encoder.

5.17 Setting the Regenerative Resistor Capacity

The regenerative resistor consumes regenerative energy that is generated by the servomotor, e.g., when the servomotor decelerates.

If an external regenerative resistor is connected, you must set Pn600 (Regenerative Resistor Capacity) and Pn603 (Regenerative Resistance).

Refer to the following manual to select the capacity of a regenerative resistor.

Σ-X-Series Peripheral Device Selection Manual (Manual No.: SIEP C710812 12)

⚠ WARNING

If you use an external regenerative resistor, set Pn600 and Pn603 to suitable values.

If you set an unsuitable value, A.320 alarms (Regenerative Overload) cannot be detected correctly, and the external regenerative resistor may suffer a wire break or personal injury or fire may result.

Use an regenerative resistor with a suitable capacity for the external regenerative resistor.

If you use an external regenerative resistor with an unsuitable capacity, personal injury or fire may result.

Pn600 (2600h)	Regenerative Resistor Capacity			Speed Pos Trq
	Setting Range	Setting Unit	Default Setting	When Enabled
	0 to SERVOPACK's maximum applicable motor capacity	10 W	0	Immediately
Pn603 (2603h)	Regenerative Resistance			Speed Pos Trq
	Setting Range	Setting Unit	Default Setting	When Enabled
	0 to 65535	10 mΩ	0	Immediately

Set the regenerative resistor capacity to a value that is consistent with the allowable capacity of the external regenerative resistor. The setting depends on the cooling conditions of the external regenerative resistor.

- For self-cooling (natural convection cooling): Set the parameter to a maximum 20% of the capacity (W) of the actually installed regenerative resistor.
- For forced-air cooling: Set the parameter to a maximum 50% of the capacity (W) of the actually installed regenerative resistor.

Note:

1. To use the SERVOPACK's built-in regenerative resistor or Yaskawa's regenerative resistor unit, set Pn600 to 0.
2. An A.320 alarm will be displayed if the setting is not suitable.

Example

For a self-cooling 100-W external regenerative resistor, set Pn600 (2600h) (Regenerative Resistor Capacity) to 2 (×10 W) (100 W × 20% = 20 W).

Important

- When an external regenerative resistor is used at the normal rated load ratio, the resistor temperature increases to between 200°C and 300°C. Always apply derating. Consult the manufacturer for the resistor's load characteristics.
- For safety, use an external regenerative resistor with a thermoswitch.

A.320 (Regenerative Overload) and A.920 (Regenerative Overload) alarms are detected by the following overload protection characteristics.

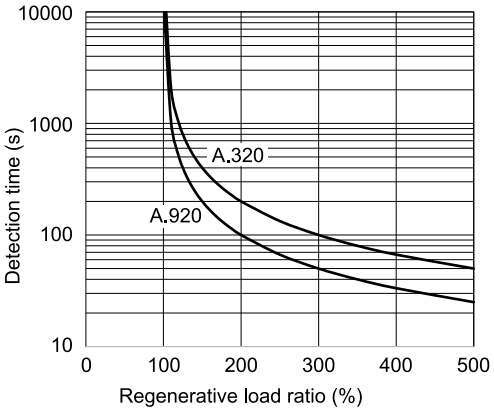

The regenerative load ratio differs on whether the regenerative resistor is built-in or external as described next.

- When the regenerative resistor is built-in: Permissible power consumption [W] of the built-in regenerative resistor is detected as regenerative load ratio 100%
- When the regenerative resistor is external: Setting of Pn600 is detected as regenerative load ratio 100%

Refer to the following section for the permissible power consumption of the built-in regenerative resistor.

☞ *2.1.1 Ratings on page 70*

You can use the [Operation] monitor in the SigmaWin+ to check the regenerative load ratio. Refer to the following section for details.

☞ *9.2.2 Operation Monitor, Status Monitor, and I/O Monitor on page 498*

5.18 Σ-V/Σ-7 Compatible Function and Settings

The Σ-V/Σ-7 compatible function allows you to easily replace a Σ-V/Σ-7-Series SERVOPACK with a Σ-X-Series SERVOPACK in an existing servo system.

5.18.1 Setting the Encoder Resolution Compatibility Selection

When a Σ-X rotary servomotor is connected to a Σ-X-Series SERVOPACK, the servomotor can be operated with an encoder resolution that differs from the servomotor specifications.

First set Pn21D to n.□□□1 (enable encoder resolution compatibility), and then set the encoder resolution in Pn21D = n.□□X□.

> **Important**
> After setting the parameters, check the details of the settings again. If this settings are incorrect, unexpected machine operation, failure, or personal injury may occur.

		Encoder Resolution Compatibility Selection (Speed / Pos / Trq)		When Enabled
Pn21D (221Dh)	n.□□□X	0 Default	Disable encoder resolution compatibility.	After restart
		1	Enable encoder resolution compatibility.	

		Encoder Resolution Compatibility: Resolution Selection (Speed / Pos / Trq)		When Enabled
Pn21D (221Dh)	n.□□X□	4	Operate as 20-bit encoder.	After restart
		6	Operate as 22-bit encoder.	
		8 Default	Operate as 24-bit encoder.	
		A	Operate as 26-bit encoder.	
		Other values	Reserved (Do not use.)	

(1) Restrictions

Encoder bit count compatibility cannot be used when any of the following conditions apply.

- When fully-closed loop control is being used.
- When the bit count of the encoder in the connected servomotor is less than the bit count selected in Pn21D = n.□□X□.
- When a linear servomotor is connected.
- When the encoder resolution of the connected servomotor is not 2^n.

6

Application Functions

Describes the application functions that you can set before you start servo system operation. It also describes the setting methods.

6.1 Changing Allocations of I/O Signals 230
6.1.1 Changing Allocations of I/O Signals 230
6.1.2 I/O Signal Allocations 232
6.1.3 Input Signal Allocations 232
6.1.4 Output Signal Allocations 234
6.1.5 ALM (Servo Alarm Output) Signal 236
6.1.6 /WARN (Warning Output) Signal 237
6.1.7 /TGON (Rotation Detection Output) Signal 237
6.1.8 /S-RDY (Servo Ready Output) Signal 238
6.1.9 /V-CMP (Speed Coincidence Detection Output) Signal 239
6.1.10 /COIN (Positioning Completion Output) Signal 240
6.1.11 /NEAR (Near Output) Signal 241
6.1.12 Speed Limit during Torque Control 242

6.2 Operation for Momentary Power Interruptions 244

6.3 SEMI F47 Function 245
6.3.1 Execution Sequence 245
6.3.2 Related Parameters 246

6.4 Setting the Maximum Motor Speed 247

6.5 Encoder Divided Pulse Output 248
6.5.1 Encoder Divided Pulse Output Signals 248
6.5.2 Setting for the Encoder Divided Pulse Output 252

6.6 Software Limits 255

6.7 Selecting Torque Limits 256
6.7.1 Internal Torque Limits 256
6.7.2 External Torque Limits 257
6.7.3 /CLT (Torque Limit Detection Output) Signal 260

6.8 Absolute Encoders 261
6.8.1 Connecting an Absolute Encoder 262
6.8.2 Structure of the Position Data of the Absolute Encoder 262
6.8.3 Output Ports for the Position Data from the Absolute Encoder 262
6.8.4 Reading the Position Data from the Absolute Encoder 263
6.8.5 Transmission Specifications 264
6.8.6 Calculating the Current Position in Machine Coordinates 264
6.8.7 Multiturn Limit Setting 265
6.8.8 A.CC0 (Multiturn Limit Disagreement Alarm) 266

6.9 Absolute Linear Encoders 270
6.9.1 Connecting an Absolute Linear Encoder 270
6.9.2 Structure of the Position Data of the Absolute Linear Encoder 270
6.9.3 Output Ports for the Position Data from the Absolute Linear Encoder 270
6.9.4 Reading the Position Data from the Absolute Linear Encoder 271
6.9.5 Transmission Specifications 272
6.9.6 Calculating the Current Position in Machine Coordinates 273

6.10 Software Reset 274
6.10.1 Preparations 274
6.10.2 Applicable Tools 274
6.10.3 Operating Procedure 274

6.11 Vibration Detection Level Initialization 276
6.11.1 Preparations 276
6.11.2 Applicable Tools 276
6.11.3 Operating Procedure 277
6.11.4 Related Parameters 278

6.12 Adjusting the Motor Current Detection Signal Offset 279
6.12.1 Automatic Adjustment 279
6.12.2 Manual Adjustment 281

6.13 Forcing the Motor to Stop 283
6.13.1 FSTP (Forced Stop Input) Signal 283
6.13.2 Stopping Method Selection for Forced Stops 283
6.13.3 Resetting Method for Forced Stops 284

6.14 Overheat Protection 286
6.14.1 Connecting the Overheat Protection Input (TH) Signal 286
6.14.2 Overheat Protection Selections 288

6.15 Triggers at Preset Positions 289
6.15.1 Outline 289

6.15.2 I/O Signal Connector (CN1) Pin Layout 290
6.15.3 Procedure to Use Triggers at Preset Positions 291

6.16 Rotational Coordinate System 297
6.16.1 Outline 297
6.16.2 Block Diagrams 298
6.16.3 Supported Modes of Operation When the Rotational Coordinate System Is Enabled 298
6.16.4 Setup Procedure 298

6.17 Specifying Output Status When a Host Communications Error Occurs 302
6.17.1 Function Selections for Specifying Output Status When a Host Communications Error Occurs 302
6.17.2 Precautions 302

6.18 Soft Start Settings 304

6.19 Reference Filters 305
6.19.1 Speed Reference Filter 305
6.19.2 Average Position Reference Movement Filter 305

6.1 Changing Allocations of I/O Signals

I/O signals are allocated to the pins on the I/O signal connector (CN1) in advance. You can change the allocations and the polarity for some of the signals. Signal allocations and polarity settings are made with the SigmaWin+ or parameters.

Information

Refer to the following section for the default settings of the I/O signal connector (CN1) and pin numbers for which allocations can be changed.

☞ *4.5.1 I/O Signal Connector (CN1) Names and Functions on page 153*

6.1.1 Changing Allocations of I/O Signals

Use the following procedure to change the signals allocated to pins on the I/O signal connector (CN1) and the polarity of the signals.

Information

This section gives the procedure using the SigmaWin+. Signal allocations and polarity can also be set with parameters. Refer to the following section for details.

☞ *6.1.3 Input Signal Allocations on page 232*

☞ *6.1.4 Output Signal Allocations on page 234*

Important

If you use Σ-LINK II, you must also set the peripheral devices in addition to the I/O signal allocations. Refer to the following chapter instead of this procedure if you use Σ-LINK II.

☞ *11 Σ-LINK II Function on page 539*

1. **Click the [ ] button for the servo drive in the workspace of the Main Window of the SigmaWin+.**

   The [Menu] window will be displayed.

2. **Click [I/O Signal Allocation] in the [Basic Functions] area.**

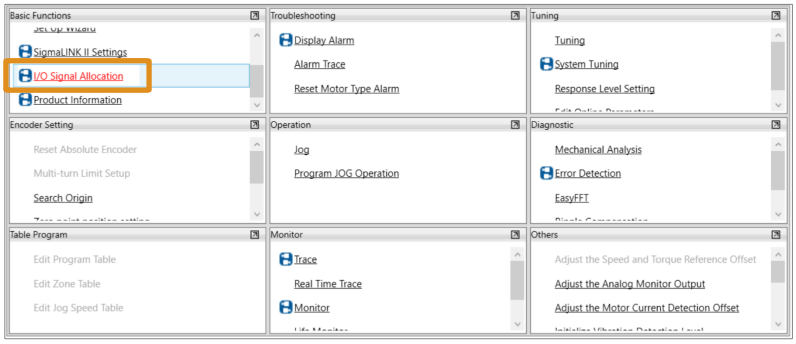

   The [I/O Signal Allocation] window will be displayed.

3. **Click [Change Method].**

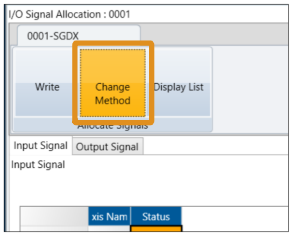

   The [Change Signal Allocation Method] window will be displayed.

4. **Select the allocation methods and click the [Change/Software Reset] button.**

   Refer to the following sections for details on allocation methods.

   ☞ *6.1.2 I/O Signal Allocations on page 232*

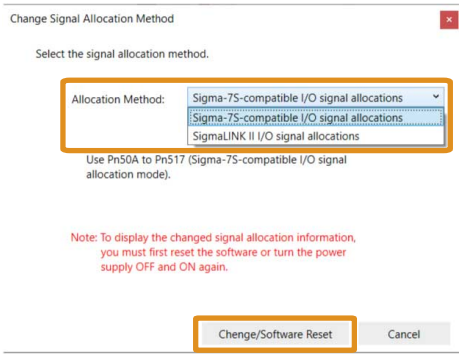

The software will be reset to change the set allocation methods. The [I/O Signal Allocation] dialog box will return when the software is reset.

5. **Click the [Input Signal] tab or [Output Signal] tab for the signal allocations to change.**

6. **Double-click the [Pin Number] cell on the row of the signal with the allocation to change, select the pin number, and then press the [Enter] key.**

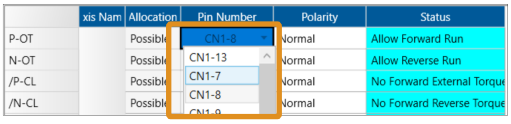

The background of the cell with the changed signal allocation will change to green.

7. **Double-click the [Polarity] cell on the row of the signal with the polarity to change, select the polarity, and then press the [Enter] key.**

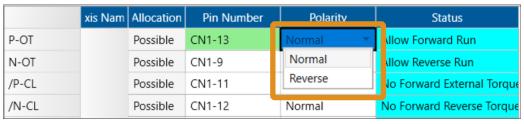

The background of the cell with the changed polarity will change to green.

8. **Click [Write].**

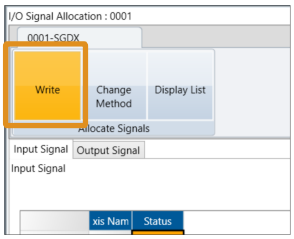

The [Write Signal Allocation Information] dialog box will be displayed.

9. **Click the [Change/Software Reset] button.**

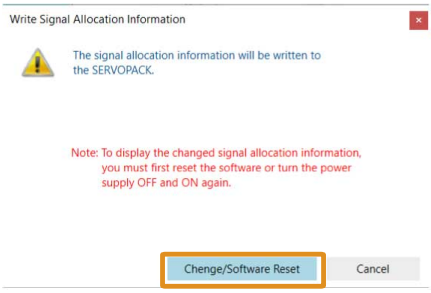

The software will be reset, the changes to the I/O signal allocations and polarities will be applied, and the backgrounds of the cell will return to white.

This concludes the procedure.

6.1.2 I/O Signal Allocations

There are the following two methods to allocate I/O signals.

Allocation Method	Description	Reference
Σ-7S-compatible I/O Signal Allocations	Use Pn50A to Pn516 to allocate pin numbers to I/O signals.	• Input Signals ☞ *(1) Σ-7S-Compatible Input Signal Allocations on page 232* • Output Signals ☞ *(1) Σ-7S-Compatible Output Signal Allocations on page 234*
Σ-LINK II Input Signal Allocations	• When the Σ-LINK II Is Not Used Use Pn590 to Pn5BC to allocate pin numbers to I/O signals.	• Input Signals ☞ *(2) Σ-LINK II Input Signal Allocations on page 233* • Output Signals ☞ *(2) Σ-LINK II Input Signal Allocations on page 235*
	• When the Σ-LINK II Is Used Use Pn590 to Pn5BC to allocate pin numbers or communications data to input signals.	

Information When Σ-LINK II is not used, "Σ-7S-compatible I/O Signal Allocations" and "Σ-LINK II-compatible I/O Signal Allocations" differ only in the parameters used to allocate I/O signals. The signals and pin numbers to allocate are the same for both methods.

Specify the allocation method to use in Pn50A = n.□□□X (Input Signal Allocation Mode).

		Input Signal Allocation Mode Speed Pos Trq		When Enabled
Pn50A (250Ah)	n.□□□X	0	Reserved (Do not use.)	After restart
		1 Default	Use Pn50A to Pn516 (Sigma-7S-compatible I/O signal allocation mode).	
		2	Use Pn590 to Pn5BC (SigmaLINK II input signal allocation mode).	

6.1.3 Input Signal Allocations

This section describes the parameters used to change allocations and the relationship between pin numbers and polarity by allocation method of input signals.

Important
- If you change the default polarity settings for the P-OT (Forward Drive Prohibit Input), or N-OT (Reverse Drive Prohibit Input) signal, the main circuit power will not be turned OFF and the overtravel function will not operate if there are signal line disconnections or other problems. If you must change the polarity of one of these signals, verify operation and make sure that no safety problems will exist.
- If you allocate two or more signals to the same input circuit, a logical OR of the inputs will be used and all of the allocated signals will operate accordingly.
  This may result in unexpected operation.

(1) Σ-7S-Compatible Input Signal Allocations

The parameters used to change allocations of I/O signals are shown in the following table.

Signal		Parameter
P-OT	Forward Drive Prohibit Input	Pn50A (250Ah) = n.X□□□
N-OT	Reverse Drive Prohibit Input	Pn50B (250Bh) = n.□□□X
/P-CL	Forward External Torque Limit Input	Pn50B (250Bh) = n.□X□□
/N-CL	Reverse External Torque Limit Input	Pn50B (250Bh) = n.X□□□
/Probe1	Probe 1 Latch Input	Pn511 (2511h) = n.□□X□
/Probe2	Probe 2 Latch Input	Pn511 (2511h) = n.□X□□
/Home	/Home Input	Pn511 (2511h) = n.X□□□
FSTP	Forced Stop Input	Pn516 (2516h) = n.□□□X

(a) Relationship between Parameter Settings, Allocated Pins, and Polarities

The following table shows the relationship between the input signal parameter settings, the pins on the I/O signal connector (CN1), and polarities.

Parameter Setting	Pin No.	Description
0	CN1-13 *1	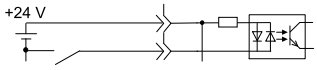 A reverse signal (a signal with "/" before the signal abbreviation, such as the / P-CL signal) is active when the contacts are ON (closed). A signal that does not have "/" before the signal abbreviation (such as the P-OT signal) is active when the contacts are OFF (open).
1	CN1-7 *1	
2	CN1-8 *1	
3	CN1-9 *1	
4	CN1-10	
5	CN1-11	
6	CN1-12	
7	–	The input signal is not allocated to a connector pin and it is always active. If the signal is processed on a signal edge, then it is always inactive.
8	–	The input signal is not allocated to a connector pin and it is always inactive. Set the parameter to 8 if the signal is not used.
9	CN1-13 *1	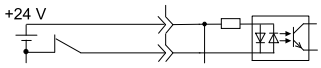 A reverse signal (a signal with "/" before the signal abbreviation, such as the / P-CL signal) is active when the contacts are OFF (open). A signal that does not have "/" before the signal abbreviation (such as the P-OT signal) is active when the contacts are ON (closed).
A	CN1-7 *1	
B	CN1-8 *1	
C	CN1-9 *1	
D	CN1-10	
E	CN1-11	
F	CN1-12	

*1 Cannot be set if Pn511 (2511h) = n.□□X□ (/Probe1 (Probe 1 Latch Input) Signal Allocation), Pn511 (2511h) = n.□X□□ (/Probe2 (Probe 2 Latch Input) Signal Allocation), and Pn511 (2511h) = n.X□□□ (/Home (Home Switch Input) Signal Allocation).

< Example 1 >

When Pn50A is set to n.5□□□, the P-OT (Forward Drive Prohibit Input) signal is active (enable forward drive) when CN1-11 is ON (open).

< Example 2 >

When Pn50A is set to n.8□□□, the P-OT (Forward Drive Prohibit Input) signal is always inactive.

(2) Σ-LINK II Input Signal Allocations

The parameters used to change allocations of input signals are shown in the following table.

Signal		Parameter
P-OT	Forward Drive Prohibit Input	Pn590 (2590h)
N-OT	Reverse Drive Prohibit Input	Pn591 (2591h)
/P-CL	Forward External Torque Limit Input	Pn598 (2598h)
/N-CL	Reverse External Torque Limit Input	Pn599 (2599h)
/Probe1	Probe 1 Latch Input	Pn593 (2593h)
/Probe2	Probe 2 Latch Input	Pn594 (2594h)
/Home	/Home Input	Pn595 (2595h)
FSTP	Forced Stop Input	Pn597 (2597h)

(a) Relationship between Parameter Settings and Allocated Pin Numbers

The following table shows the relationship between the input signal parameter settings and the pin numbers on the I/O signal connector (CN1).

Parameter Setting	Description
n.□007 *1	Allocate the signal to CN1-7.
n.□008 *1	Allocate the signal to CN1-8.
n.□009 *1	Allocate the signal to CN1-9.
n.□010	Allocate the signal to CN1-10.
n.□011	Allocate the signal to CN1-11.
n.□012	Allocate the signal to CN1-12.
n.□013	Allocate the signal to CN1-13.
n.□100	Allocate the signal to SigmaLINK II Sequence Input 0.
n.□101	Allocate the signal to SigmaLINK II Sequence Input 1.
n.□102	Allocate the signal to SigmaLINK II Sequence Input 2.
n.□103	Allocate the signal to SigmaLINK II Sequence Input 3.
n.□104	Allocate the signal to SigmaLINK II Sequence Input 4.
n.□105	Allocate the signal to SigmaLINK II Sequence Input 5.
n.□106	Allocate the signal to SigmaLINK II Sequence Input 6.
n.□107	Allocate the signal to SigmaLINK II Sequence Input 7.

*1 Cannot be set for Pn593 (2593h) (/Probe1 (Probe 1 Latch Input) Signal Allocation), Pn594 (2594h) (/Probe2 (Probe 2 Latch Input) Signal Allocation), and Pn595 (2595h) (/Home (Home Switch Input) Signal Allocation).

Important

If you will not use Σ-LINK II, always set n.□0□□ (allocate signal to CN1-□). If you set n.□1□□ (allocate the signal to SigmaLINK II Sequence Input □), the signal input will not function.

(b) Relationship between Parameter Settings and Polarities

The following table shows the relationship between the input signal parameter settings and polarities.

Parameter Setting	Description
n.0□□□	The signal is always inactive.
n.1□□□	Active when input signal is ON (closed).
n.2□□□	Active when input signal is OFF (open).
n.3□□□	The signal is always active.

6.1.4 Output Signal Allocations

This section describes the parameters used to change allocations and the relationship between pin numbers and polarity by allocation method of output signals.

Important

- The signals that are not detected are considered to be OFF. For example, the /COIN (Positioning Completion Output) signal is considered to be OFF during speed control.
- Reversing the polarity of the /BK (Brake Output) signal, i.e., changing it to positive logic, will prevent the holding brake from operating if its signal line is disconnected. If you must change the polarity of this signal, verify operation and make sure that no safety problems will exist.
- If you allocate more than one signal to the same output circuit, a logical OR of the signals will be output.

(1) Σ-7S-Compatible Output Signal Allocations

The parameters used to change allocations of I/O signals are shown in the following table.

Signal		Parameter
/COIN	Positioning Completion Output	Pn50E (250Eh) = n.□□□X
/V-CMP	Speed Coincidence Detection Output	Pn50E (250Eh) = n.□□X□
/TGON	Rotation Detection Output	Pn50E (250Eh) = n.□X□□
/S-RDY	Servo Ready Output	Pn50E (250Eh) = n.X□□□
/CLT	Torque Limit Detection Output	Pn50F (250Fh) = n.□□□X
/VLT	Speed Limit Detection Output	Pn50F (250Fh) = n.□□X□
/BK	Brake Output	Pn50F (250Fh) = n.□X□□
/WARN	Warning Output	Pn50F (250Fh) = n.X□□□
/NEAR	Near Output	Pn510 (2510h) = n.□□□X
/PM	Preventative Maintenance Output	Pn514 (2514h) = n.□X□□

(a) Relationship between Parameter Settings and Allocated Pin Numbers

The following table shows the relationship between the output signal parameter settings and the pin numbers on the I/O signal connector (CN1).

Parameter Setting	Description
0	Disable (signal output is not used)
1	Output the allocated signal from the CN1-1 or CN1-2 output terminal.
2	Output the allocated signal from the CN1-23 or CN1-24 output terminal.
3	Output the allocated signal from the CN1-25 or CN1-26 output terminal.
4 to 6	Reserved (Do not use.)

(b) Output Signal Polarity Switching

The polarity of the output signal is switched using Pn512.

		Output Signal Inversion for CN1-1 and CN1-2 Terminals Speed Pos Trq		When Enabled
Pn512 (2512h)	n.□□□X	0 Default	The signal is not inverted.	After restart
		1	The signal is inverted.	
		Output Signal Inversion for CN1-23 and CN1-24 Terminals Speed Pos Trq		When Enabled
Pn512 (2512h)	n.□□X□	0 Default	The signal is not inverted.	After restart
		1	The signal is inverted.	
		Output Signal Inversion for CN1-25 and CN1-26 Terminals Speed Pos Trq		When Enabled
Pn512 (2512h)	n.□X□□	0 Default	The signal is not inverted.	After restart
		1	The signal is inverted.	

(2) Σ-LINK II Input Signal Allocations

The parameters used to change allocations of output signals are shown in the following table.

Signal		Parameter
/COIN	Positioning Completion Output	Pn5B0 (25B0h)
/V-CMP	Speed Coincidence Detection Output	Pn5B1 (25B1h)
/TGON	Rotation Detection Output	Pn5B2 (25B2h)
/S-RDY	Servo Ready Output	Pn5B3 (25B3h)

Continued on next page.

Continued from previous page.

Signal		Parameter
/CLT	Torque Limit Detection Output	Pn5B4 (25B4h)
/VLT	Speed Limit Detection Output	Pn5B5 (25B5h)
/BK	Brake Output	Pn5B6 (25B6h)
/WARN	Warning Output	Pn5B7 (25B7h)
/NEAR	Near Output	Pn5B8 (25B8h)
/PM	Preventative Maintenance Output	Pn5BC (25BCh)

(a) Relationship between Parameter Settings and Allocated Pin Numbers

The following table shows the relationship between the output signal parameter settings and the pin numbers on the I/O signal connector (CN1).

Parameter Setting	Description
n.□000	Disable (the signal output is not used).
n.□023	Allocate the signal to CN1-23.
n.□025	Allocate the signal to CN1-25.
n.□027	Allocate the signal to CN1-27.
n.□029	Allocate the signal to CN1-29.
n.□031	Allocate the signal to CN1-31.

Important

When the polarity setting is "n.1□□ (output the signal)" or "n.2□□ (invert the signal and output it)", make sure to allocate the signal to a pin number on CN1. If you do not allocate the signal to a pin number, A.040 (Parameter Setting Error) will occur.

(b) Relationship between Parameter Settings and Polarities

The following table shows the relationship between the input signal parameter settings and polarities.

Parameter Setting	Description
n.0□□□	Disable (the signal output is not used).
n.1□□□	Output the signal.
n.2□□□	Invert the signal and output it.

Important

When the polarity setting is n.1□□ (output the signal) or n.2□□ (invert the signal and output it), make sure to allocate the signal to a pin number on CN1. If you do not allocate the signal to a pin number, A.040 (Parameter Setting Error) will occur.

6.1.5 ALM (Servo Alarm Output) Signal

This signal is output when the SERVOPACK detects an error.

Important

Configure an external circuit so that this alarm output turns OFF the main circuit power supply to the SERVOPACK whenever an error occurs.

Type	Signal	Connector Pin No.	Signal Status	Meaning
Output	ALM	CN1-3 and CN1-4	ON (closed)	Normal SERVOPACK status
			OFF (open)	SERVOPACK alarm

(1) Alarm Reset Methods

Refer to the following section for information on the alarm reset methods.

☞ *16.2.3 Alarm Reset on page 730*

6.1.6 /WARN (Warning Output) Signal

Both alarms and warnings are generated by the SERVOPACK. Alarms indicate errors in the SERVOPACK for which operation must be stopped immediately. Warnings indicate situations that may results in alarms but for which stopping operation is not yet necessary.

The /WARN (Warning Output) signal indicates that a condition exists that may result in an alarm.

Type	Signal	Connector Pin No.	Signal Status	Meaning
Output	/WARN	Must be allocated.	ON (closed)	Warning
			OFF (open)	Normal status

Note:

You must allocate the /WARN signal to use it. The parameters that you use depend on the allocation method.

Allocation Method	Parameter to Use
Σ-7S-compatible I/O Signal Allocations	• Pn50A = n.□□□1 (Σ-7S-Compatible I/O Signal Allocations) • Pn50F = n.X□□□ (/WARN (Warning Output) Signal Allocation)
Σ-LINK II Input Allocations	• Pn50A= n.□□□2 (Σ-LINK II Input Allocations) • Pn5B7 (/WARN (Warning Output) Signal Allocation)

Refer to the following section for details.

☞ *6.1.4 Output Signal Allocations on page 234*

6.1.7 /TGON (Rotation Detection Output) Signal

The /TGON signal indicates that the servomotor is operating.

This signal is output when the shaft of the servomotor rotates at the setting of Pn502 (Rotation Detection Level) or faster or the setting of Pn581 (Zero Speed Level) or faster.

Type	Signal	Connector Pin No.	Signal Status	Servomotor	Meaning
Output	/TGON	Must be allocated.	ON (closed)	Rotary servomotor	The servomotor is operating at the setting of Pn502 or faster.
				Linear servomotor	The Servomotor is operating at the setting of Pn581 or faster.
			OFF (open)	Rotary servomotor	The servomotor is operating at a speed that is slower than the setting of Pn502.
				Linear servomotor	The servomotor is operating at a speed that is slower than the setting of Pn581.

Note:

You must allocate the /TGON signal to use it. The parameters that you use depend on the allocation method.

Allocation Method	Parameter to Use
Σ-7S-compatible I/O Signal Allocations	• Pn50A = n.□□□1 (Σ-7S-compatible I/O Signal Allocations) • Pn50E = n.□X□□ (/TGON (Rotation Detection Output) Signal Allocation)
Σ-LINK II Input Signal Allocations	• Pn50A = n.□□□2 (Σ-LINK II Input Allocation) • Pn5B2 (/TGON (Rotation Detection Output) Signal Allocation)

Refer to the following section for details.

☞ *6.1.4 Output Signal Allocations on page 234*

(1) Setting the Rotation Detection Level

Use the following parameter to set the speed detection level at which to output the /TGON signal.

- Rotary Servomotors

Pn502 (2502h)	Rotation Detection Level			Speed Pos Trq
	Setting Range	Setting Unit	Default Setting	When Enabled
	1 to 10000	1 min^{-1}	20	Immediately

- Linear Servomotors

Pn581 (2581h)	Zero Speed Level			Speed Pos Trq
	Setting Range	Setting Unit	Default Setting	When Enabled
	1 to 10000	1 mm/s	20	Immediately

6.1.8 /S-RDY (Servo Ready Output) Signal

The /S-RDY (Servo Ready Output) signal turns ON when the SERVOPACK is ready to accept the Servo ON command (Enable Operation command).

The /S-RDY signal is turned ON under the following conditions.

- Main circuit power is ON.
- There is no hard wire base block state.
- There are no alarms.
- There is no forced stop state (= the Forced Stop Input (FSTP) signal is ON).
- If a servomotor without a polarity sensor is used, polarity detection has been completed *1.

*1 Do not include this condition if the Servo ON command (Enable Operation command) is input for the first time after the control power was turned ON. In that case, when the first Servo ON command (Enable Operation command) is input, polarity detection is started immediately and the /S-RDY signal turns ON at the completion of polarity detection.

Type	Signal	Connector Pin No.	Signal Status	Meaning
Output	/S-RDY	Must be allocated.	ON (closed)	Ready to receive the Enable Operation command.
			OFF (open)	Not ready to receive the Enable Operation command.

Note:

• You must allocate the /S-RDY signal to use it. The parameters that you use depend on the allocation method.

Allocation Method	Parameter to Use
Σ-7S-compatible I/O Signal Allocations	– Pn50A = n.□□□1 (Σ-7S-compatible I/O Signal Allocations) – Pn50E = n.X□□□ (/S-RDY (Servo Ready Output) Signal Allocations)
Σ-LINK II Input Signal Allocations	– Pn50A = n.□□□2 (use Σ-LINK II input signal allocations) – Pn5B3 (/S-RDY (Servo Ready Output) Signal Allocations)

Refer to the following section for details.

☞ *6.1.4 Output Signal Allocations on page 234*

• Refer to the following section for information on the hard wire base block and the /S-RDY signal.

☞ *12.2.8 /S-RDY (Servo Ready Output) Signal on page 573*

6.1.9 /V-CMP (Speed Coincidence Detection Output) Signal

The /V-CMP (Speed Coincidence Detection Output) signal is output when the servomotor speed is the same as the reference speed. This signal is used, for example, to interlock the SERVOPACK and the host controller. You can use this output signal only during speed control.

The /V-CMP signal is described in the following table.

Type	Signal	Connector Pin No.	Signal Status	Meaning
Output	/V-CMP	Must be allocated.	ON (closed)	The speed coincides.
			OFF (open)	The speed does not coincide.

Note:

You must allocate the /V-CMP signal to use it. The parameters that you use depend on the allocation method.

Allocation Method	Parameter to Use
Σ-7S-compatible I/O Signal Allocations	• Pn50A = n.□□□1 (Σ-7S-Compatible I/O Signal Allocations) • Pn50E = n.□□X□ (/V-CMP (Speed Coincidence Detection Output) Signal Allocation)
Σ-LINK II Input Allocations	• Pn50A= n.□□□2 (Σ-LINK II Input Allocations) • Pn5B1 (/V-CMP (Speed Coincidence Detection Output) Signal Allocation)

Refer to the following section for details.

☞ *6.1.4 Output Signal Allocations on page 234*

You can set the speed detection width for the /V-CMP signal in Pn503 (Speed Coincidence Detection Signal Output Width) for a rotary servomotor or in Pn582 (Speed Coincidence Detection Signal Output Width) for a linear servomotor.

- Rotary Servomotors

Pn503 (2503h)	Speed Coincidence Detection Signal Output Width			Speed Pos Trq
	Setting Range	Setting Unit	Default Setting	When Enabled
	0 to 100	1 min^{-1}	10	Immediately

The signal is output when the difference between the reference speed and motor speed is equal or less than the setting.
For example, if Pn503 is set to 100 and the speed reference is 2000 min^{-1}, the signal would be output when the motor speed is between 1900 min^{-1} and 2100 min^{-1}.

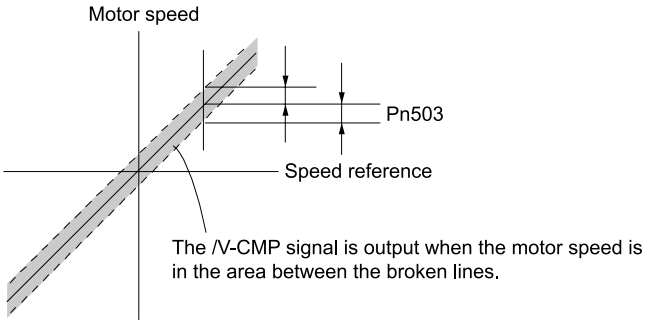

- Linear Servomotors

Pn582 (2582h)	Speed Coincidence Detection Signal Output Width			Speed Pos Trq
	Setting Range	Setting Unit	Default Setting	When Enabled
	0 to 100	1 mm/s	10	Immediately

The signal is output when the difference between the reference speed and motor speed is equal or less than the setting.
For example, if Pn582 is set to 100 and the speed reference is 2000 mm/s, the signal would be output when the motor speed is between 1900 mm/s and 2100 mm/s.

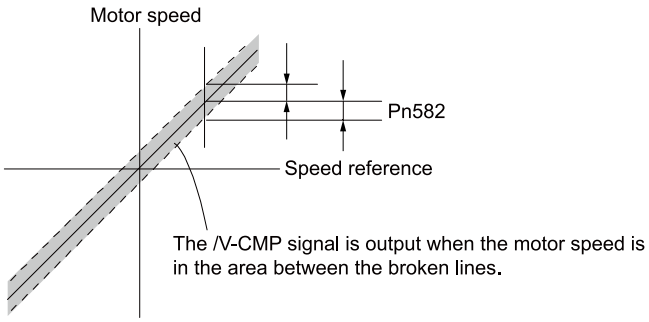

6.1.10 /COIN (Positioning Completion Output) Signal

The /COIN (Positioning Completion Output) signal indicates that servomotor positioning has been completed during position control.

The /COIN signal is output when the difference between the reference position output by the host controller and the current position of the servomotor (i.e., the position deviation as given by the value of the deviation counter) is equal to or less than the setting of Pn522 (Positioning Completed Width).

Use this signal to check the completion of positioning from the host controller.

Type	Signal	Connector Pin No.	Signal Status	Meaning
Output	/COIN	Must be allocated.	ON (closed)	Positioning has been completed.
			OFF (open)	Positioning has not been completed.

Note:

You must allocate the /COIN signal to use it. The parameters that you use depend on the allocation method.

Allocation Method	Parameter to Use
Σ-7S-Compatible I/O Signal Allocations	• Pn50A = n.□□□1 (Σ-7S-Compatible I/O Signal Allocations) • Pn50E = n.□□□X (/COIN (Positioning Completion Output) Signal Allocation)
Σ-LINK II Input Allocations	• Pn50A = n.□□□2 (Σ-LINK II Input Allocation) • Pn5B0 (/COIN (Positioning Completion Output) Signal Allocation)

For details, refer to the following section.

☞ *6.1.4 Output Signal Allocations on page 234*

(1) Setting the Positioning Completed Width

The /COIN signal is output when the difference between the reference position and the current position (i.e., the position deviation as given by the value of the deviation counter) is equal to or less than the setting of Pn522 (Positioning Completed Width).

Pn522 (2522h)	In-position Range			Speed Pos Trq
	Setting Range	Setting Unit	Default Setting	When Enabled
	0 to 1073741824	1 reference unit	7	Immediately

The setting of this parameter has no effect on final positioning accuracy.

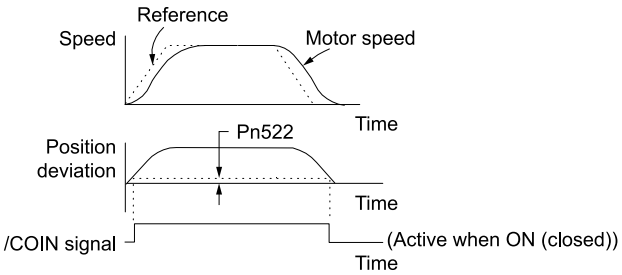

Note:

If the parameter is set to a value that is too large, the /COIN signal may be output when the position deviation is low during a low-speed operation. If that occurs, reduce the setting until the signal is no longer output.

(2) Setting the Output Timing of the /COIN (Positioning Completion Output) Signal

You can add a reference input condition to the output conditions for the /COIN signal to change the signal output timing.

If the position deviation is always low and a narrow positioning completed width is used, change the setting of Pn207 = n.X□□□ (/COIN (Positioning Completion Output) Signal Output Timing) to change output timing for the /COIN signal.

		/COIN (Positioning Completion Output) Signal Output Timing Speed Pos Trq		When Enabled
Pn207 (2207h)	n.X□□□	0 Default	Output when the absolute value of the position deviation is the same or less than the setting of Pn522 (2522h) (Positioning Completed Width).	After restart
		1	Output when the absolute value of the position error is the same or less than the setting of Pn522 (2522h) (Positioning Completed Width) and the reference after the position reference filter is 0.	
		2	Output when the absolute value of the position error is the same or less than the setting of Pn522 (2522h) (Positioning Completed Width) and the reference input is 0.	

6.1.11 /NEAR (Near Output) Signal

The /NEAR (Near Output) signal indicates when positioning completion is being approached.

The host controller receives the NEAR signal before it receives the /COIN (Positioning Completion Output) signal, it can start preparations for the operating sequence to use after positioning has been completed. This allows you to reduce the time required for operation when positioning is completed.

The NEAR signal is generally used in combination with the /COIN signal.

Type	Signal	Connector Pin No.	Signal Status	Meaning
Output	/NEAR	Must be allocated.	ON (closed)	The servomotor has reached a point near to positioning completion.
			OFF (open)	The servomotor has not reached a point near to positioning completion.

Note:

You must allocate the /NEAR signal to use it. The parameters that you use depend on the allocation method.

Allocation Method	Parameter to Use
Σ-7S-compatible I/O Signal Allocations	• Pn50A = n.□□□1 (Σ-7S-Compatible I/O Signal Allocations) • Pn50E = n.□□□X (/NEAR (Near Output) Signal Allocation)
Σ-LINK II Input Allocations	• Pn50A= n.□□□2 (Σ-LINK II Input Allocations) • Pn5B8 (/NEAR (Near Output) Signal Allocation)

Refer to the following section for details.

☞ *6.1.4 Output Signal Allocations on page 234*

(1) Setting /NEAR (Near) Signal

You set the condition for outputting the /NEAR (Near Output) signal (i.e., the near signal width) in Pn524 (Near Signal Width). The /NEAR signal is output when the difference between the reference position and the current position (i.e., the position deviation as given by the value of the deviation counter) is equal to or less than the setting of Pn524.

Pn524 (2524h)	Near Signal Width			Speed Pos Trq
	Setting Range	Setting Unit	Default Setting	When Enabled
	1 to 1073741824	1 reference unit	1073741824	Immediately

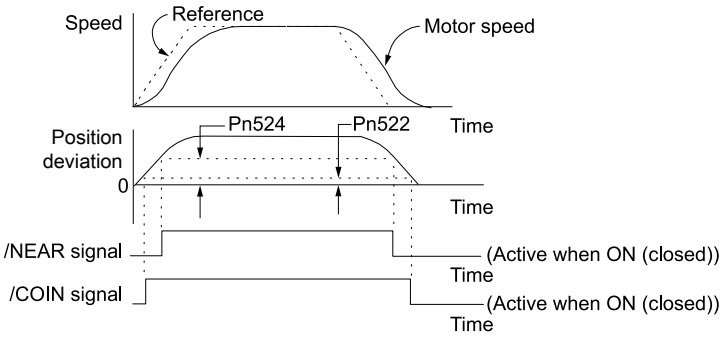

Note:

Normally, set Pn524 to a value that is larger than the setting of Pn522 (Positioning Completed Width).

6.1.12 Speed Limit during Torque Control

You can limit the speed of the servomotor to protect the machine.

When you use a servomotor for torque control, the servomotor is controlled to output the specified torque, but the motor speed is not controlled. Therefore, if a reference torque is input that is larger than the machine torque, the speed of the servomotor may increase greatly. If that may occur, use this function to limit the speed.

Note:

The actual limit of servomotor speed depends on the load conditions on the servomotor.

Without Speed Limit	With a Speed Limit
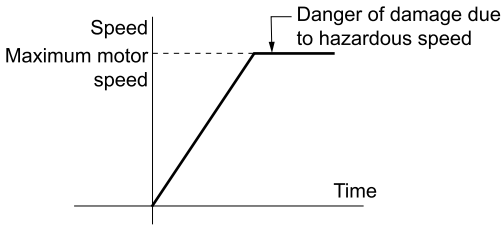	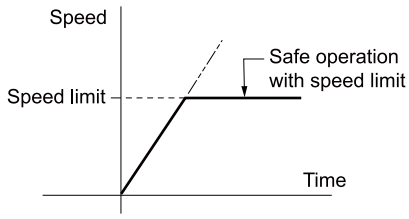

(1) /VLT (Speed Limit Detection Output) signal

The signal that is output when the motor speed is being limited by the speed limit is described in the following table.

Type	Signal	Connector Pin No.	Signal Status	Meaning
Output	/VLT	Must be allocated.	ON (closed)	The servomotor speed is being limited.
			OFF (open)	The servomotor speed is not being limited.

Note:

You must allocate the /VLT signal to use it. The parameters that you use depend on the allocation method.

Allocation Method	Parameter to Use
Σ-7S-compatible I/O Signal Allocations	• Pn50A = n.□□□1 (Σ-7S-Compatible I/O Signal Allocations) • Pn50F = n.□□X□ (/VLT (Speed Limit Detection Output) Signal Allocation)
Σ-LINK II Input Allocations	• Pn50A= n.□□□2 (Σ-LINK II Input Allocations) • Pn5B5 (/VLT (Speed Limit Detection Output) Signal Allocation)

Refer to the following section for details.

☞ *6.1.4 Output Signal Allocations on page 234*

(2) Internal Speed Limiting

Set the speed limit for the motor in Pn407 (Speed Limit during Torque Control) or Pn480 (Speed Limit during Force Control).

Also set Pn408 = n.□□X□ (Speed Limit Selection) to specify using the maximum motor speed or the overspeed alarm detection speed as the speed limit.

Use caution as the definition of maximum motor speed depends on your servomotor.

- Rotary servomotor: The maximum rotation speed listed in the ratings table of the servomotor.
  Refer to the following document for the ratings table of the servomotor.
  Σ-X-Series Catalog (Catalog No.: KAEP C710812 03)
- Linear servomotor: The setting of Pn385 (Maximum Motor Speed).

The overspeed alarm detection speed is appropriately 1.1-times the maximum motor speed.

		Speed Limit Selection (Speed Pos Trq)		When Enabled
Pn408 (2408h)	n.□□X□	0 (Default)	Use the smaller of the maximum motor speed and the setting of Pn407 (2407h) as the speed limit. Use the smaller of the maximum motor speed and the setting of Pn480 (2480h) as the speed limit.	After restart
		1	Use the smaller of the overspeed alarm detection speed and the setting of Pn407 (2407h) as the speed limit. Use the smaller of the overspeed alarm detection speed and the setting of Pn480 (2480h) as the speed limit.	

Note:

If you are using a rotary servomotor, set Pn407 (Speed Limit during Torque Control). If you are using a linear servomotor, set Pn480 (Speed Limit during Force Control).

- Rotary Servomotors

	Speed Limit during Torque Control (Speed Pos Trq)			
Pn407 (2407h)	Setting Range	Setting Unit	Default Setting	When Enabled
	0 to 10000	1 min^{-1}	10000	Immediately

- Linear Servomotors

	Speed Limit during Force Control (Speed Pos Trq)			
Pn480 (2480h)	Setting Range	Setting Unit	Default Setting	When Enabled
	0 to 10000	1 mm/s	10000	Immediately

Note:

If the parameter setting exceeds the maximum speed of the servomotor, the servomotor's maximum speed or the overspeed alarm detection speed will be used.

6.2 Operation for Momentary Power Interruptions

Even if the main power to the SERVOPACK is interrupted momentarily, power to the motor (servo ON status) will be maintained for the time set in Pn509 (Momentary Power Interruption Hold Time).

Pn509 (2509h)	Momentary Power Interruption Hold Time			Speed Pos Trq
	Setting Range	Setting Unit	Default Setting	When Enabled
	20 to 50000	1 ms	20	Immediately

If the momentary power interruption time is equal to or less than the setting of Pn509, power to the motor will be continued. If it is longer than the setting, power to the motor will be stopped. Power will be supplied to the motor again when the main circuit power supply recovers.

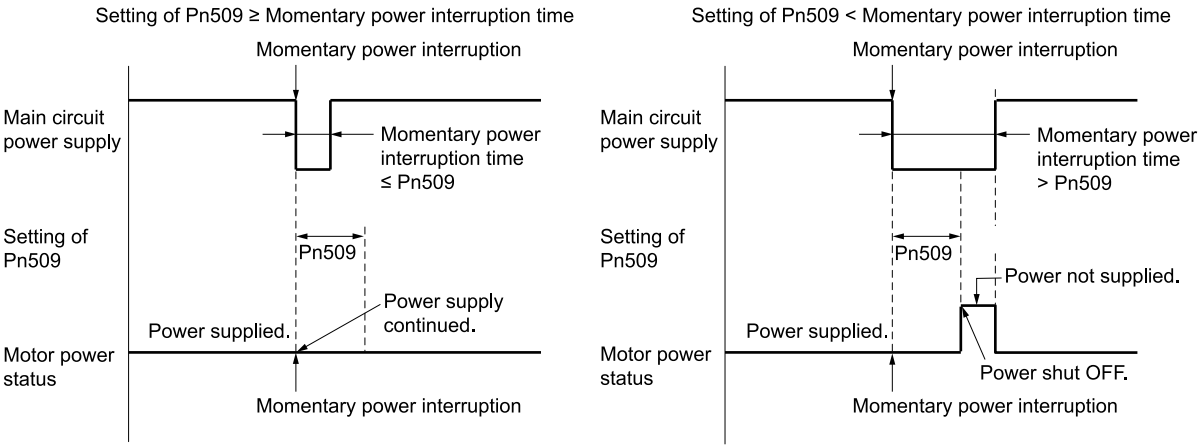

Information

- If the momentary power interruption time exceeds the setting of Pn509, the /S-RDY (Servo Ready Output) signal will turn OFF.
- If uninterruptible power supplies are used for the control power supply and main circuit power supply, the SERVOPACK can withstand a power interruption that lasts longer than 50000 ms.
- The holding time of the SERVOPACK control power supply is approximately 100 ms. If control operations become impossible during a momentary power interruption of the control power supply, the setting of Pn509 will be ignored and the same operation will be performed as for when the power is turned OFF normally.
- The detection delay time for main circuit power OFF is approximately 16 ms. Therefore, the actual time that power will continue being supplied to the motor will increase from the setting of Pn509 by the amount of the detection delay time.

Important

The holding time of the main circuit power supply depends on the output from the SERVOPACK. If the load on the servomotor is large and an A.410 alarm (Undervoltage) occurs, the setting of Pn509 will be ignored.

6.3 SEMI F47 Function

The SEMI F47 function detects an A.971 warning (Undervoltage) and limits the output current if the DC main circuit power supply voltage to the SERVOPACK drops to a specified value or lower because the power was momentarily interrupted or the main circuit power supply voltage was temporarily reduced.

This function complies with the SEMI F47 standards for semiconductor manufacturing equipment.

You can combine this function with the setting of Pn509 (Momentary Power Interruption Hold Time) to allow the servomotor to continue operating without stopping for an alarm or without recovery work even if the power supply voltage drops.

6.3.1 Execution Sequence

This function can be executed either with the host controller or with the SERVOPACK. Use Pn008 = n.□□X□ (Function Selection for Undervoltage) to specify whether the function is executed by the host controller or by the SERVOPACK.

The default setting is Pn008 = n.□□0□ (do not detect undervoltage warning).

		Function Selection for Undervoltage Speed Pos Trq		When Enabled
Pn008 (2008h)	n.□□X□	0 Default	Do not detect undervoltage.	After restart
		1	Detect undervoltage warning and limit torque at host controller.	
		2	Detect undervoltage warning and limit torque with Pn424 (2424h) and Pn425 (2425h) (i.e., only in SERVOPACK).	

(1) When Pn008 is set to n.□□1□ (Execution with the Host Controller)

The host controller limits the torque in response to an A.971 warning (Undervoltage).

The host controller removes the torque limit after the Undervoltage warning is cleared.

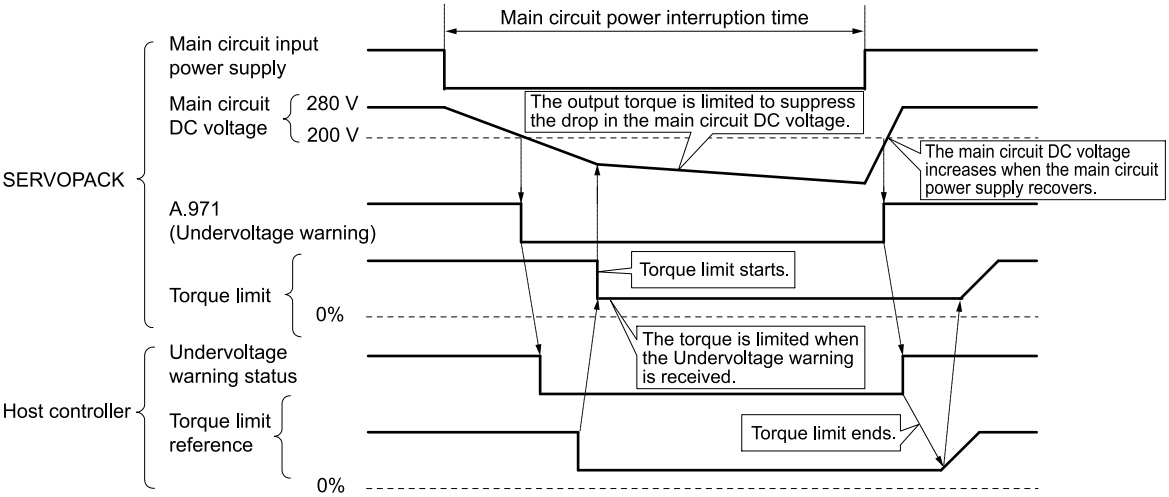

(2) When Pn008 is set to n.□□2□ (Execution with the SERVOPACK)

The torque is limited in the SERVOPACK in response to an Undervoltage warning.

The SERVOPACK controls the torque limit for the set time after the Undervoltage warning is cleared.

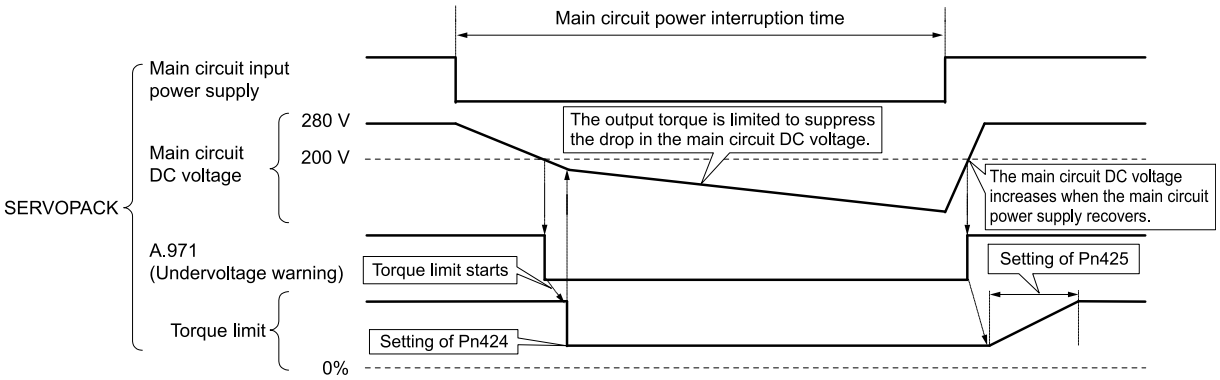

6.3.2 Related Parameters

The following parameters are related to the SEMI F47 function.

Pn424 (2424h)	Torque Limit at Main Circuit Voltage Drop			Speed Pos Trq
	Setting Range	Setting Unit	Default Setting	When Enabled
	0 to 100	1%	50	Immediately
Pn425 (2425h)	Release Time for Torque Limit at Main Circuit Voltage Drop			Speed Pos Trq
	Setting Range	Setting Unit	Default Setting	When Enabled
	0 to 1000	1 ms	100	Immediately
Pn509 (2509h)	Momentary Power Interruption Hold Time			Speed Pos Trq
	Setting Range	Setting Unit	Default Setting	When Enabled
	20 to 50000	1 ms	20	Immediately

Note:

1. The setting unit for Pn424 (Torque Limit at Main Circuit Voltage Drop) is set as percentage of the motor rated torque.
2. If you will use the SEMI F47 function, set the time to 1000 ms.

Important

- This function handles momentary power interruptions for the voltage and time ranges stipulated in SEMI F47. An uninterruptible power supply (UPS) is required as a backup for momentary power interruptions that exceed these voltage and time ranges.
- This function is for a drop in the voltage of the main circuit power supply. To ensure the momentary power interruption hold time of the control power supply, the following constraints are applicable.
  <Constraints on the Control Power Supply>
  SERVOPACK with 400-VAC power supply input: Supply power with a 24-VDC power supply that supports the SEMI F47 standards.
  SERVOPACK with 200-/100-VAC power supply input: Supply power with an uninterruptible power supply (UPS).
- Set the host controller or SERVOPACK torque limit so that a torque reference that exceeds the specified acceleration torque will not be output when the power supply for the main circuit is restored.
- For a vertical axis, do not limit the torque to a value that is lower than the holding torque.
- This function limits torque within the range of the SERVOPACK's capability for power interruptions. It is not intended for use under all load and operating conditions. Set the parameters while monitoring operation on the actual machine.
- You can set the momentary power interruption hold time to increase the amount of time from when the power is turned OFF until power to the motor is stopped.
  To stop the power to the motor immediately, use the Disable Operation command (Servo OFF command).

6.4 Setting the Maximum Motor Speed

You can set the maximum speed of the servomotor with the following parameter.

- Rotary Servomotors

Pn316 (2316h)	Maximum Motor Speed			Speed Pos Trq
	Setting Range	Setting Unit	Default Setting	When Enabled
	0 to 65535	1 min^{-1}	10000	After restart

- Linear Servomotors

Pn385 (2385h)	Maximum Motor Speed			Speed Pos Trq
	Setting Range	Setting Unit	Default Setting	When Enabled
	1 to 100	100 mm/s	50	After restart

You can achieve the following by lowering the maximum speed of the servomotor.

- If the servomotor speed exceeds the setting, an A.510 alarm (Overspeed) will occur.
- With a linear servomotor, you can increase the upper limit for the setting of Pn281 (Encoder Output Resolution). Refer to the following section for details.
  ☞ *6.5 Encoder Divided Pulse Output on page 248*

Changing the setting of the parameter is effective in the following cases.

- To protect the machine by stopping machine operation with an alarm when the set speed is reached or exceeded
- To limit the speed so that the load is driven beyond the allowable moment load of inertia
  Refer to relevant manual from the following list for the relationship between the speed and the allowable moment of load inertia.
  - Σ-X-Series Rotary Servomotor Product Manual (Manual No.: SIEP C230210 00)
  - Σ-7-Series Direct Drive Servomotor Product Manual (Manual No.: SIEP S800001 38)
  - Σ-7-Series Linear Servomotor Product Manual (Manual No.: SIEP S800001 37)
- To increase the encoder output resolution and increase the position resolution managed by the host controller (for a linear servomotor)

6.5 Encoder Divided Pulse Output

The encoder divided pulse output is a signal that is output from the encoder and processed inside the SERVOPACK. It is then output externally in the form of two phase pulse signals (phases A and B) with a 90° phase differential. At the host controller, it is used as the position feedback.

The following table describes the signals and output phase forms.

Note:

If Pn660 is set to n.1□□□ (enable triggers at preset positions), encoder divided pulses are not output.

6.5.1 Encoder Divided Pulse Output Signals

Type	Signal	Connector Pin No.	Name	Meaning
Output	PAO	CN1-17	Encoder Divided Pulse Output, Phase A	• Rotary Servomotors These encoder divided pulse output pins output the number of pulses per servomotor resolution that is set in Pn212 (Number of Encoder Output Pulses). The phase difference between phase A and phase B is an electric angle of 90°. • Linear Servomotors These encoder divided pulse output pins output pulses at the resolution that is set in Pn281 (Encoder Output Resolution). The phase difference between phase A and phase B is an electric angle of 90°.
	/PAO	CN1-18		
	PBO	CN1-19	Encoder Divided Pulse Output, Phase B	
	/PBO	CN1-20		
	PCO	CN1-21	Encoder Divided Pulse Output, Phase C *1	These pins output one pulse every servomotor rotation.
	/PCO	CN1-22		

*1 Refer to the following section for more information on encoder phase C.

☞ *(a) Relation between Renishaw PLC Incremental Linear Encoders and Encoder Output Pulse Signal from the SERVOPACK When Using a RGS20 Scale and RGH22B Sensor Head on page 249*

- Rotary Servomotors

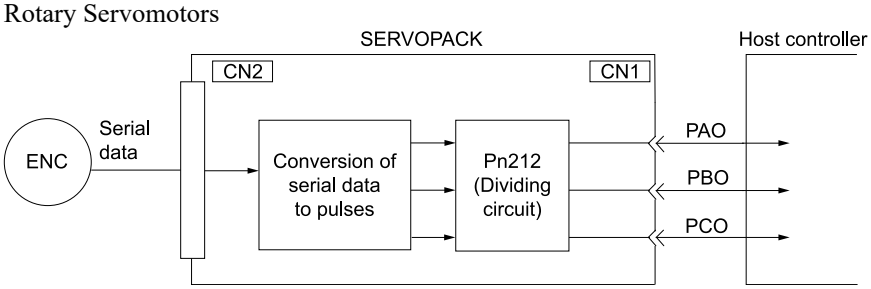

- Linear Servomotors

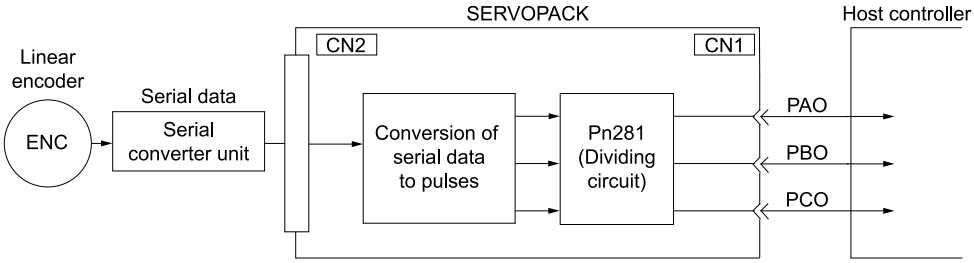

(1) Output Phase Forms

Forward Rotation or Movement (phase B leads by 90°)	Reverse Rotation or Movement (phase A leads by 90°)
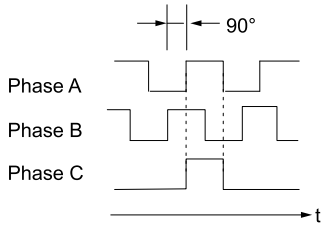	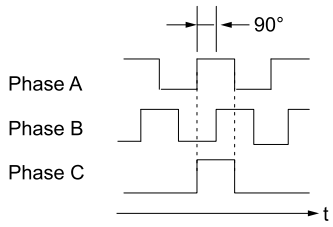

Note:

The pulse width of encoder phase C depends on the setting of Pn212 (Number of Encoder Output Pulses) or Pn281 (Encoder Output Resolution). It is the same as the width of phase A.

Even for Pn000 = n.□□□1 (reverse operation), the output phase form is the same as shown above.

> **Important**
> If you use the SERVOPACK's phase-C pulse output for an origin return, rotate the servomotor two or more rotations before you start an origin return. If the servomotor cannot be rotated two or more times, perform an origin return operation at a motor speed of 600 min^{-1} or lower. If the motor speed is higher than 600 min^{-1}, the phase-C pulse may not be output correctly.

(2) Linear Encoder Application Precautions

The following precautions apply to the encoder output pulses when an external linear encoder is used.

(a) Relation between Renishaw PLC Incremental Linear Encoders and Encoder Output Pulse Signal from the SERVOPACK When Using a RGS20 Scale and RGH22B Sensor Head

The output position of the origin signal (Ref) will depend on the direction of movement for some models of incremental linear encoders from Renishaw PLC.

In that case, the phase-C pulse of the SERVOPACK is output at two positions.

For detailed specifications on the origin signal, refer to the manual for the Renishaw PLC incremental linear encoder.

◆ When Passing the First Origin Signal (Ref) in the Forward Direction and Returning after Turning ON the Power

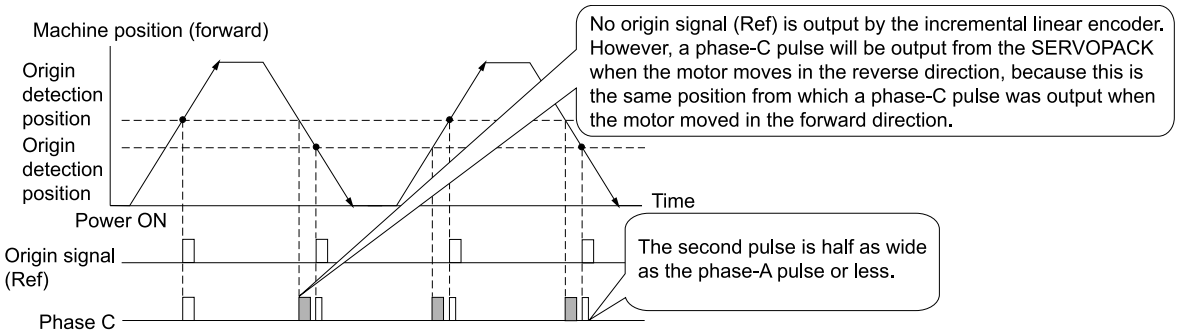

◆ When Passing the First Origin Signal (Ref) in the Reverse Direction and Returning after Turning ON the Power

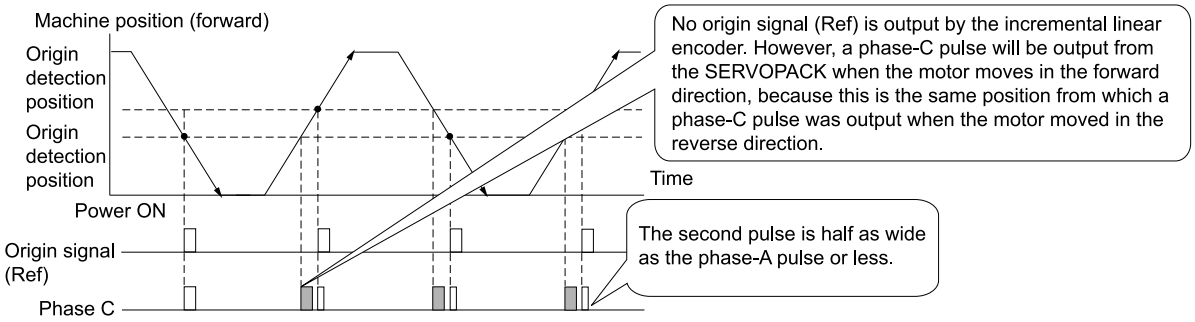

(b) Precautions When Using a Linear Incremental Encoder from Magnescale Co., Ltd.

◆ Encoder Divided Phase-C Pulse Output Selection

You can also output the encoder's phase-C pulse for reverse movement. To do so, set Pn081 to n.□□□1.

		Phase-C Pulse Output Selection Speed Pos Trq		When Enabled
Pn081 (2081h)	n.□□□X	0 Default	Output phase-C pulses only in the forward direction.	After restart
		1	Output phase-C pulses in both the forward and reverse directions.	

Important

Precautions on Setting Pn081 = n.□□□X (Phase-C Pulse Output Selection)

- If you set Pn081 to n.□□□1 (output phase-C pulses in both the forward and reverse directions), the width of the phase-C pulse output may be narrower than the width of the phase-A pulse.
- There is a difference of 1/8th of the scale pitch in the phase-C detection position for the encoder's phase-C pulse output position, origin return command, or phase-C latch between when Pn081 = n.□□□X set to 0 (output phase-C pulses only in the forward direction) and when it is set to 1 (output phase-C pulses in both the forward and reverse directions).

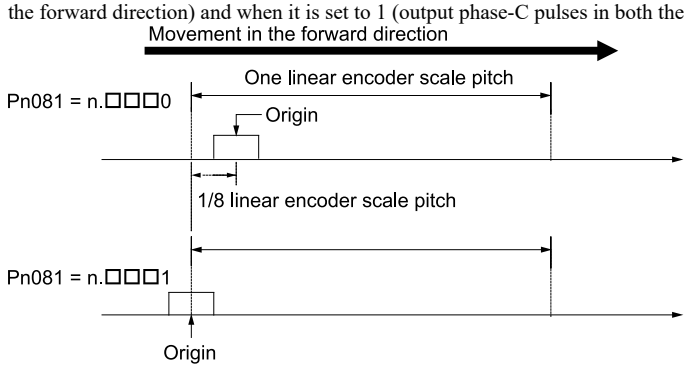

Observe the following precaution if you set Pn081 to n.□□□0 (output phase-C pulses only in the forward direction).

When a linear incremental encoder from Magnescale Co., Ltd. is used, the count direction of the encoder determines how the phase-C pulse (CN1-21 and CN1-22) is output.

Note:

The count direction (up or down) of the linear encoder determines whether a phase-C pulse is output. The output of the pulse does not depend on the setting of Pn000 = n.□□□1 (Reverse Movement Mode).

Encoder Model	Interpolator	Linear Encoder Scale Pitch [μm]
SL710	PL101-RY MJ620-T13	800
SL720		800
SL730		800
SR75		80
SR85		80
SQ10	MQ10-FLA	400
	MQ10-GLA	

◆ When First Passing the Origin Signal in the Forward Direction and Returning after Turning ON the Power

The encoder's phase-C pulse (CN1-21 and CN1-22) is output when the origin detection position is passed for the first time in the forward direction after the power is turned ON.

After that, the phase-C pulse is output whenever the origin detection position is passed in the forward or reverse direction.

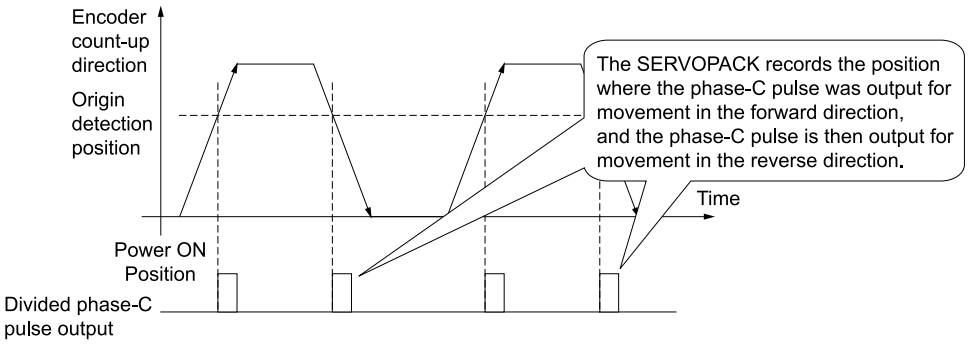

◆ When First Passing the Origin Signal in the Reverse Direction and Returning after Turning ON the Power

The encoder's phase-C pulse (CN1-21 and CN1-22) is not output when the origin detection position is passed for the first time in the reverse direction after the power is turned ON.

However, after the origin detection position is passed in the forward direction and the encoder's phase-C pulse is output, it will then also be output when the origin detection point is passed in the reverse direction.

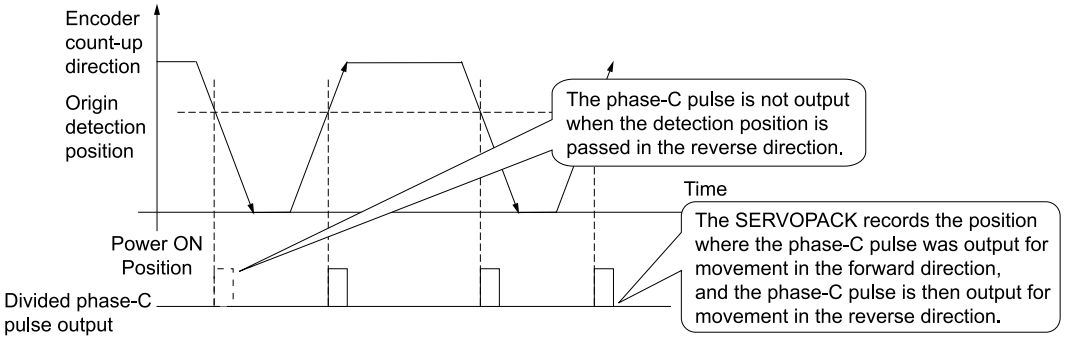

◆ When Using a Linear Encoder with Multiple Origins and First Passing the Origin Position in the Forward Direction and Returning after Turning ON the Power

The encoder's phase-C pulse is output when the origin detection position is passed for the first time in the forward direction after the power is turned ON. After that, the phase-C pulse is output whenever the origin detection position is passed in the forward or reverse direction.

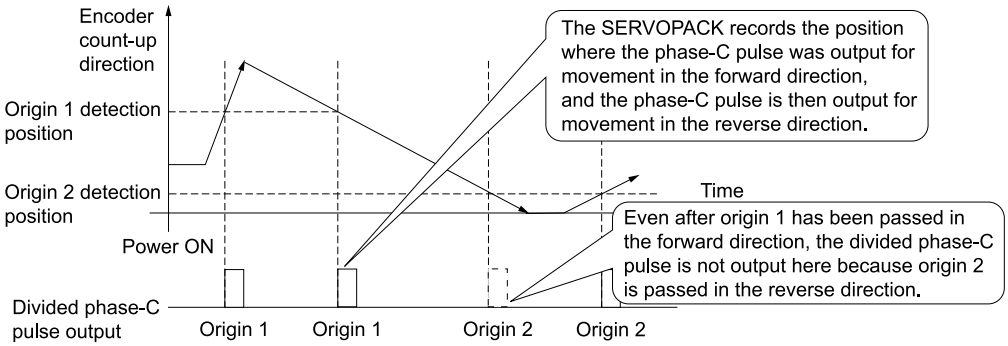

◆ When Using a Linear Encoder with Multiple Origins and First Passing the Origin Position in the Reverse Direction after Turning ON the Power

The encoder's phase-C pulse is not output when the origin detection position is passed for the first time in the reverse direction after the power is turned ON.

However, after the origin detection position is passed in the forward direction and the encoder's phase-C pulse is output, it will then also be output when the origin detection point is passed in the reverse direction.

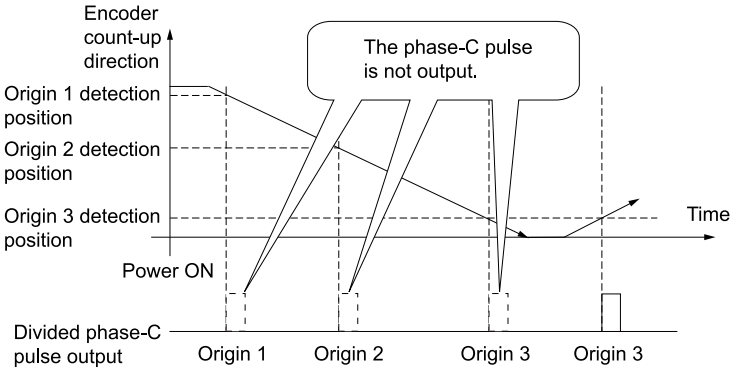

6.5.2 Setting for the Encoder Divided Pulse Output

This section describes the setting for the encoder divided pulse output for a rotary servomotor or linear servomotor.

(1) Encoder Divided Pulse Output When Using a Rotary Servomotor

If you will use a rotary servomotor, set Pn212 (Number of Encoder Output Pulses).

Pn212 (2212h)	Number of Encoder Output Pulses			Speed Pos Trq
	Setting Range	Setting Unit	Default Setting	When Enabled
	16 to 1073741824	1 P/Rev	2048	After restart

The number of pulses from the encoder per rotation are processed inside the SERVOPACK, divided by the setting of Pn212, and then output.

Set the number of encoder divided output pulses according to the system specifications of the machine or host controller.

The setting of the number of encoder output pulses is limited by the resolution of the encoder.

Setting of the Number of Encoder Output Pulses [P/Rev]	Setting Increment	Encoder Resolution				Upper Limit of Servomotor Speed for Set Number of Encoder Output Pulses [min^{-1}]
		20 bits (1048576 pulses)	22 bits (4194304 pulses)	24 bits (16777216 pulses)	26 bits (67108864 pulses)	
16 to 8192	1	○	○	○	○	7000
8193 to 16384	1	○	○	○	○	6000
16386 to 32768	2	○	○	○	○	3000
32772 to 65536	4	○	○	○	○	1500
65544 to 131072	8	○	○	○	○	750
131088 to 262144	16	○	○	○	○	375
262176 to 524288	32	–	○	○	○	187
524352 to 1048576	64	–	○	○	○	93
1048704 to 2097152	128	–	–	○ *1	○	46
2097408 to 4194304	256	–	–	○ *1	○	23

*1 You can use the encoder as an incremental encoder only.

Note:

1. The setting range of Pn212 (Number of Encoder Output Pulses) depends on the resolution of the servomotor encoder. An A.041 alarm (Encoder Output Pulse Setting Error) will occur if the above setting conditions are not met.
   Correct setting example: Pn212 can be set to 25000 [P/Rev].
   Incorrect setting example: Pn212 cannot be set to 25001 (P/Rev) because the setting increment in the above table is not used and A.041 alarm would will occur.
2. The upper limit of the pulse frequency is approximately 1.6 Mpps. The servomotor speed will be limited if the setting of the number of encoder output pulses is too high.
   An A.511 alarm (Encoder Output Pulse Overspeed) will occur if the upper limit of the motor speed is exceeded.

Output example: An output example is given below for the PAO (Encoder Pulse Output Phase A) signal and the PBO (Encoder Pulse Output Phase B) signal when Pn212 is set to 16 (16 pulses output per revolution).

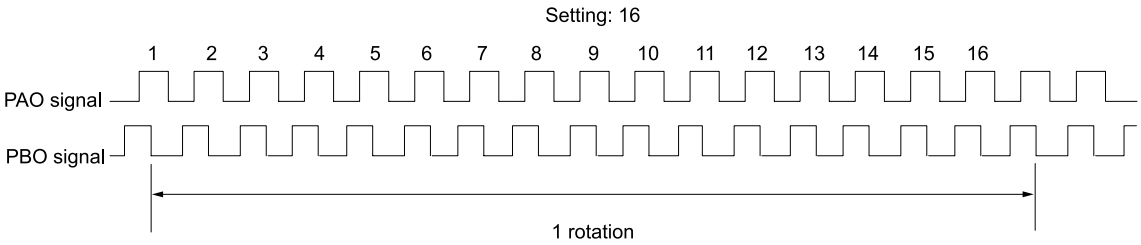

(2) Encoder Divided Pulse Output When Using a Linear Servomotor

If you will use a linear servomotor, set Pn281 (Encoder Output Resolution).

Pn281 (2281h)	Encoder Output Resolution			Speed Pos Trq
	Setting Range	Setting Unit	Default Setting	When Enabled
	1 to 4096	1 edge/pitch	20	After restart

Note:

- The maximum setting for the encoder output resolution is 4096. If the resolution of the external encoder exceeds 4096, pulse output will no longer be possible at the resolution given in the following section.
  ☞ ◆ *Feedback Resolution of Linear Encoder: Incremental Linear Encoder on page 211*
  ☞ ◆ *Feedback Resolution of Linear Encoder: Absolute Linear Encoder on page 212*
- If the setting of Pn281 exceeds the number of divisions of the external encoder, A.041 (Encoder Output Pulse Setting Error) will be output.

Set the encoder output resolution for the encoder pulse output signals (PAO, /PAO, PBO, and /PBO) from the SERVOPACK to the host controller.

The number of feedback pulses per linear encoder scale pitch *1 is divided by the setting of Pn281 (after multiplication by 4) inside the SERVOPACK and then the resulting number of pulses is output. Set the parameter according to the system specifications of the machine or host controller.

The setting range depends on Pn385 (Maximum Motor Speed) and Pn282 (Linear Encoder Scale Pitch) *1 of the servomotor. You can calculate the upper limit of the setting of Pn281 with the following formula.

$$\text{Upper limit of Pn281} = \frac{\text{Linear encoder scale pitch [μm]}}{\text{Pn385}} \times 72$$

*1 The value depends on whether a serial converter unit is used.

Using a Serial Converter Unit	Setting of Pn282
Not Using a Serial Converter Unit (when the linear encoder and SERVOPACK are connected directly or when a linear encoder that does not require a serial converter unit is used)	The linear encoder scale pitch is automatically detected by the SERVOPACK, so the setting of Pn282 is ignored.

Information

When the linear encoder scale pitch is 4 μm, the maximum motor speed is limited to 1 m/s because of the maximum response frequency of the serial converter unit.

If the setting is out of range or does not satisfy the setting conditions, an A.041 alarm (Encoder Output Pulse Setting Error) will be output. If the motor speed exceeds the upper limit for the set encoder output resolution, an A.511 alarm (Encoder Output Pulse Overspeed) will be output.

The upper limit of the encoder output resolution is restricted by the dividing specifications of the serial converter unit.

<Setting Example>

When the linear encoder scale pitch is 20 μm and the maximum motor speed is 5 m/s (Pn385 = 50).

Correct setting: Pn281 = 28 (edges/pitch)

Incorrect setting: Pn281 = 29 (edges/pitch) (An A.041 alarm would will occur.)

<Pulse Output Example>

When Pn281 = 20 (20-edge output (5-pulse output) per linear encoder scale pitch)

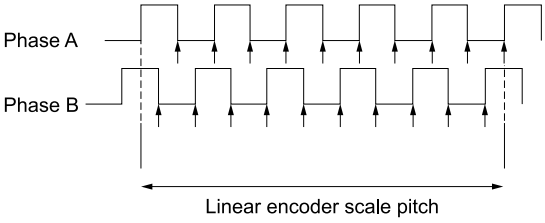

6.6 Software Limits

You can set limits in the software for machine movement that do not use the overtravel signals (P-OT and N-OT). If a software limit is exceeded, an emergency stop will be executed in the same way as it is for overtravel.

Refer to the following section for details on this function.

☞ *15.7.2 Software Position Limit (607Dh) on page 670*

6.7 Selecting Torque Limits

You can limit the torque that is output by the servomotor.

There are four different ways to limit the torque. These are described in the following table.

Limit Method	Outline	Control Method	Reference
Internal Torque Limits	The torque is always limited with the setting of a parameter.	Speed control, position control, or torque control	☞ *6.7.1 Internal Torque Limits on page 256*
External Torque Limits	The torque limits set by parameters are enabled with the external torque limit input signals.		☞ *6.7.2 External Torque Limits on page 257*
Limiting Torque with Controlword (6040h)	A command from the controller enables the torque limit that is set in a parameter.		☞ *15.6 Device Control on page 661*
Limiting Torque with Positive Torque Limit Value (60E0h), Negative Torque Limit Value (60E1h), and Max. Torque (6072h)	Torque is controlled with torque limits from the controller.		☞ *14.7 Torque Limits on page 616* ☞ *15.14 Torque Limit Function on page 684*

Note:

If you set a value that exceeds the instantaneous maximum torque of the servomotor, the torque will be limited to the instantaneous maximum torque of the servomotor.

6.7.1 Internal Torque Limits

If you use internal torque limits, the maximum output torque will always be limited to the setting of Pn402 (Forward Torque Limit) and Pn403 (Reverse Torque Limit).

(1) Rotary Servomotors

Pn402 (2402h)	Forward Torque Limit			Speed Pos Trq
	Setting Range	Setting Unit	Default Setting	When Enabled
	0 to 800	1%	800	Immediately
Pn403 (2403h)	Reverse Torque Limit			Speed Pos Trq
	Setting Range	Setting Unit	Default Setting	When Enabled
	0 to 800	1%	800	Immediately

Note:

- The setting unit is a percentage of the motor rated torque.
- If the setting of Pn402 or Pn403 is too low, the torque may be insufficient for acceleration or deceleration of the servomotor.

Without Internal Torque Limits (Output to the instantaneous maximum torque is possible.)	With Internal Torque Limits
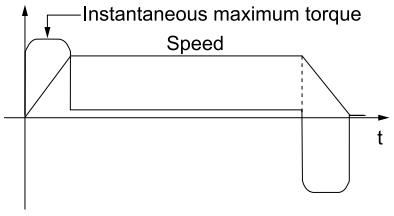	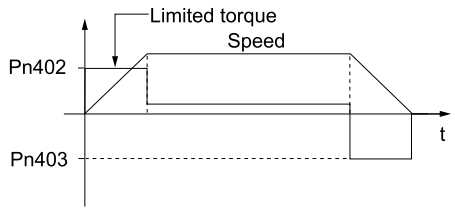

(2) Linear Servomotors

Pn483 (2483h)	Forward Force Limit			Speed Pos Trq
	Setting Range	Setting Unit	Default Setting	When Enabled
	0 to 800	1%	30	Immediately
Pn484 (2484h)	Reverse Force Limit			Speed Pos Trq
	Setting Range	Setting Unit	Default Setting	When Enabled
	0 to 800	1%	30	Immediately

Note:

- The setting unit is a percentage of the motor rated force.
- If the setting of Pn483 or Pn484 is too low, the force may be insufficient for acceleration or deceleration of the servomotor.

Without Internal Force Limits (Output to the instantaneous maximum force is possible.)	With Internal Force Limits
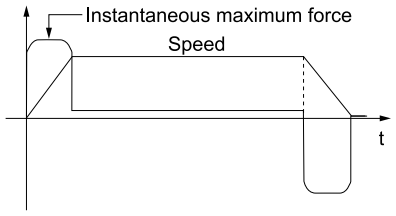	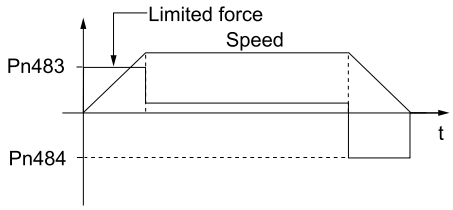

6.7.2 External Torque Limits

You can limit the torque only when required by the operating conditions of the machine by turning a signal ON and OFF.

You can use this for applications such as stopping on physical contact, or holding a workpiece with a robot.

(1) External Torque Limit Reference Signals

The /P-CL (Forward External Torque Limit Input) and /N-CL (Reverse External Torque Limit Input) signals are used as the external torque limit reference signals. The /P-CL signal is used for the forward torque limit and the /N-CL signal is used for the reverse torque limit.

Type	Signal	Connector Pin No.	Signal Status	Meaning
Input	/P-CL	Must be allocated.	ON (closed)	Applies the forward external torque limit. The torque is limited to the smaller of the settings of Pn402 *1 and Pn404.
			OFF (open)	Cancels the forward external torque limit. The torque is limited to the setting of Pn402 *1.
	/N-CL	Must be allocated.	ON (closed)	Applies the reverse external torque limit. The torque is limited to the smaller of the settings of Pn403 *1 and Pn405.
			OFF (open)	Cancels the reverse external torque limit. The torque is limited to the setting of Pn403 *1.

*1 Pn483 is used for a linear servomotor.
*2 Pn484 is used for a linear servomotor.

Note:

You must allocate the /P-CL signal and /N- CL signal to use them. The parameters that you use depend on the allocation method.

Allocation Method	Parameter to Use
Σ-7S-compatible I/O Signal Allocations	• Pn50A = n.□□□1 (Σ-7S-compatible I/O Signal Allocations) • Pn50B = n.□X□□ (/P-CL (Forward External Torque Limit Input) Signal Allocation) • Pn50B = n.X□□□ (/N-CL (Reverse External Torque Limit Input) Signal Allocation)
Σ-LINK II Input Signal Allocations	• Pn50A = n.□□□2 (use Σ-LINK II input signal allocations) • Pn598 (/P-CL (Forward External Torque Limit Input) Signal Allocations) • Pn599 (/N-CL (Reverse External Torque Limit Input) Signal Allocations)

Refer to the following section for details.

☞ *6.1.3 Input Signal Allocations on page 232*

(2) Torque Limit Settings

The parameters that are related to setting the torque limits are given below.

(a) Rotary Servomotors

If the setting of Pn402 (Forward Torque Limit), Pn403 (Reverse Torque Limit), Pn404 (Forward External Torque Limit), or Pn405 (Reverse External Torque Limit) is too low, the torque may be insufficient for acceleration or deceleration of the servomotor.

Pn402 (2402h)	Forward Torque Limit			Speed Pos Trq
	Setting Range	Setting Unit	Default Setting	When Enabled
	0 to 800	1%	800	Immediately
Pn403 (2403h)	Reverse Torque Limit			Speed Pos Trq
	Setting Range	Setting Unit	Default Setting	When Enabled
	0 to 800	1%	800	Immediately
Pn404 (2404h)	Forward External Torque Limit			Speed Pos Trq
	Setting Range	Setting Unit	Default Setting	When Enabled
	0 to 800	1%	100	Immediately
Pn405 (2405h)	Reverse External Torque Limit			Speed Pos Trq
	Setting Range	Setting Unit	Default Setting	When Enabled
	0 to 800	1%	100	Immediately

Note:

The setting unit is a percentage of the motor rated torque.

(b) Linear Servomotors

If the setting of Pn483 (Forward Force Limit), Pn484 (Reverse Force Limit), Pn404 (Forward External Force Limit), or Pn405 (Reverse External Force Limit) is too low, the force may be insufficient for acceleration or deceleration of the servomotor.

Pn483 (2483h)	Forward Force Limit			Speed Pos Trq
	Setting Range	Setting Unit	Default Setting	When Enabled
	0 to 800	1%	30	Immediately
Pn484 (2484h)	Reverse Force Limit			Speed Pos Trq
	Setting Range	Setting Unit	Default Setting	When Enabled
	0 to 800	1%	30	Immediately

Continued on next page.

Continued from previous page.

Pn404 (2404h)	Forward External Torque Limit			Speed Pos Trq
	Setting Range	Setting Unit	Default Setting	When Enabled
	0 to 800	1%	100	Immediately
Pn405 (2405h)	Reverse External Torque Limit			Speed Pos Trq
	Setting Range	Setting Unit	Default Setting	When Enabled
	0 to 800	1%	100	Immediately

Note:

The setting unit is a percentage of the motor rated force.

(3) Changes in the Output Torque for External Torque Limits

The following table shows the changes in the output torque when the internal torque limit is set to 800%.

(a) Rotary Servomotors

In this example, the servomotor direction is set to Pn000 = n.□□□0 (use CCW as the forward direction).

		/P-CL signal	
		OFF	ON
/N-CL signal	OFF	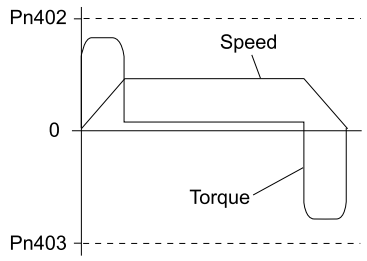	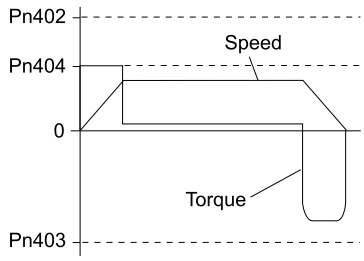
	ON	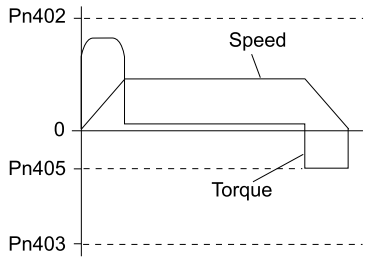	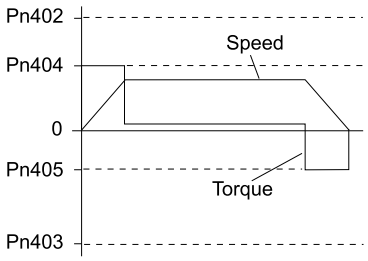

(b) Linear Servomotors

In this example, the servomotor direction is set to Pn000 = n.□□□0 (use the direction in which the linear encoder counts up as the forward direction).

		/P-CL signal	
		OFF	ON
/N-CL signal	OFF	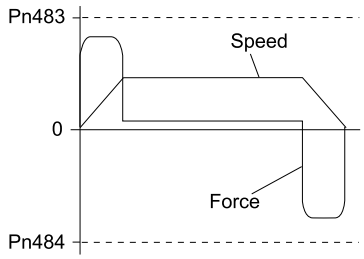	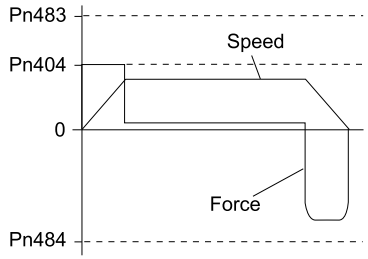
	ON	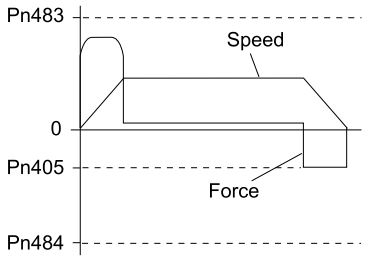	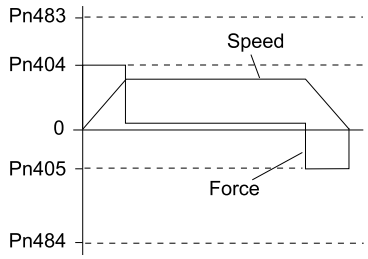

6.7.3 /CLT (Torque Limit Detection Output) Signal

This section describes the /CLT signal, which indicates the status of limiting the motor output torque.

Type	Signal	Connector Pin No.	Signal Status	Meaning
Output	/CLT	Must be allocated.	ON (closed)	The motor output torque is being limited.
			OFF (open)	The motor output torque is not being limited.

Note:

You must allocate the /CLT signal to use it. The parameters that you use depend on the allocation method.

Allocation Method	Parameter to Use
Σ-7S-compatible I/O Signal Allocation	• Pn50A = n.□□□1 (use Sigma-7S-compatible I/O signal allocations) • Pn50F = n.□□□X (/CLT (Torque Limit Detection Output) Signal Allocation)
Σ-LINK II Input Allocations	• Pn50A= n.□□□2 (use SigmaLINK II input allocations) • Pn5B4 (/CLT (Torque Limit Detection Output) Signal Allocation)

Refer to the following section for details.

☞ *6.1.4 Output Signal Allocations on page 234*

6.8 Absolute Encoders

The absolute encoder records the current position of the stop position even when the power supply is OFF.

With a system that uses an absolute encoder, the host controller can monitor the current position. Therefore, it is not necessary to perform an origin return operation when the power to the system is turned ON.

There are four types of encoders for rotary servomotors. The usage of the encoder is specified in Pn002 = n.□X□□.

Information Σ-X SERVOPACKs can be connected to absolute encoders only. However, an absolute encoder can also be used as an incremental encoder by setting Pn002 to n.□X□□.

Refer to the following section for encoder models.

☞ ◆ *Encoder Resolution on page 210*

- Parameter Settings When Using an Incremental Encoder

Parameter		Meaning	When Enabled
Pn002 (2002h)	**n.□0□□ (default setting)**	Use the encoder as an incremental encoder. A battery is not required.	After restart
	n.□1□□	Use the encoder as an incremental encoder. A battery is not required.	
	n.□2□□	Use the encoder as a single-turn absolute encoder. A battery is not required.	

- Parameter Settings When Using a Single-Turn Absolute Encoder

Parameter		Meaning	When Enabled
Pn002 (2002h)	**n.□0□□ (default setting)**	Use the encoder as a single-turn absolute encoder. A battery is not required.	After restart
	n.□1□□	Use the encoder as an incremental encoder. A battery is not required.	
	n.□2□□	Use the encoder as a single-turn absolute encoder. A battery is not required.	

- Parameter Settings When Using a Multiturn Absolute Encoder

Parameter		Meaning	When Enabled
Pn002 (2002h)	**n.□0□□ (default setting)**	Use the encoder as a multiturn absolute encoder. A battery is required.	After restart
	n.□1□□	Use the encoder as an incremental encoder. A battery is not required.	
	n.□2□□	Use the encoder as a single-turn absolute encoder. A battery is not required.	

- Parameter Settings When Using a Batteryless Multiturn Absolute Encoder

Parameter		Meaning	When Enabled
Pn002 (2002h)	**n.□0□□ (default setting)**	Use the encoder as a multiturn absolute encoder. A battery is not required.	After restart
	n.□1□□	Use the encoder as an incremental encoder. A battery is not required.	
	n.□2□□	Use the encoder as a single-turn absolute encoder. A battery is not required.	

NOTICE

Install a battery at either the host controller or on the encoder cable.

If you install batteries both at the host controller and on the encoder cable at the same time, you will create a loop circuit between the batteries, resulting in a risk of damage or burning.

6.8.1 Connecting an Absolute Encoder

You can get the position data from the absolute encoder with EtherCAT communications.

Therefore, it is not necessary to wire the PAO, PBO, and PCO (Encoder Divided Pulse Output) signals.

If they need to be wired, refer to the following section.

☞ *4.4.3 Wiring the SERVOPACK to the Encoder on page 144*

☞ *4.5.3 I/O Signal Wiring Examples on page 156*

6.8.2 Structure of the Position Data of the Absolute Encoder

The position data of the absolute encoder is the position coordinate from the origin of the absolute encoder.

If you use the encoder divided pulse output (PAO, PBO, and PCO) signals to get the position information, the position data from the absolute encoder contains the following two items.

- The number of rotations from the origin of the encoder coordinate system (called the multiturn data)
- The position (number of pulses) within one rotation

The position data of the absolute encoder is as follows:

Position data of absolute encoder = Multiturn data × Number of pulses within one encoder rotation (setting of Pn212) + Position (number of pulses) within one rotation

For a single-turn absolute encoder, the multiturn data is 0.

6.8.3 Output Ports for the Position Data from the Absolute Encoder

You can read the position data of the absolute encoder from the PAO, PBO, and PCO (Encoder Divided Pulse Output) signals.

The output method and timing for the position data of the absolute encoder are different in each case.

A conceptual diagram of the connections of the PAO, PBO, and PCO (Encoder Divided Pulse Output) signals to the host controller is provided below.

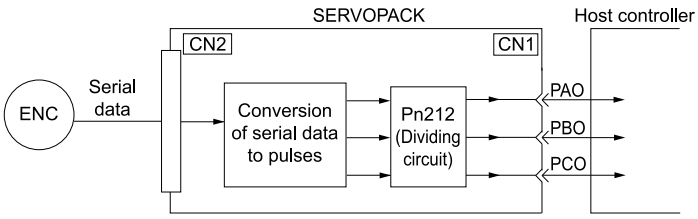

Signal	Status	Signal Contents
		When Using an Absolute Encoder
PAO	First signal	Multiturn data position within one rotation (pulse train)
	During normal operation	Incremental pulses
PBO	First signal	Position within one rotation (pulse train)
	During normal operation	Incremental pulses
PCO	Always	Origin pulse

The PAO (Encoder Divided Pulse Output) signal outputs the position data from the absolute encoder after the control power is turned ON.

The position data of the absolute encoder is the current stop position. The absolute encoder outputs the multiturn data with the specified protocol. The absolute encoder outputs the position within one rotation as a pulse train. It then outputs pulses as an incremental encoder (incremental operation status).

The host controller must have a reception circuit (e.g., UART) for the position data from the absolute encoder. The pulse counter at the host controller will not count pulses when the multiturn data (communications message)

is input because only phase A is input. Counting starts from the position of the absolute encoder within one rotation.

The output circuits for the PAO, PBO, and PCO signals use line drivers. Refer to the following section for details on line drivers.

☞ *4.5.4 I/O Circuits on page 157*

6.8.4 Reading the Position Data from the Absolute Encoder

The sequence to read the position data from the absolute encoder of a rotary servomotor is given below.

The multiturn data is sent according to the transmission specifications.

The position of the absolute encoder within one rotation is output as a pulse train.

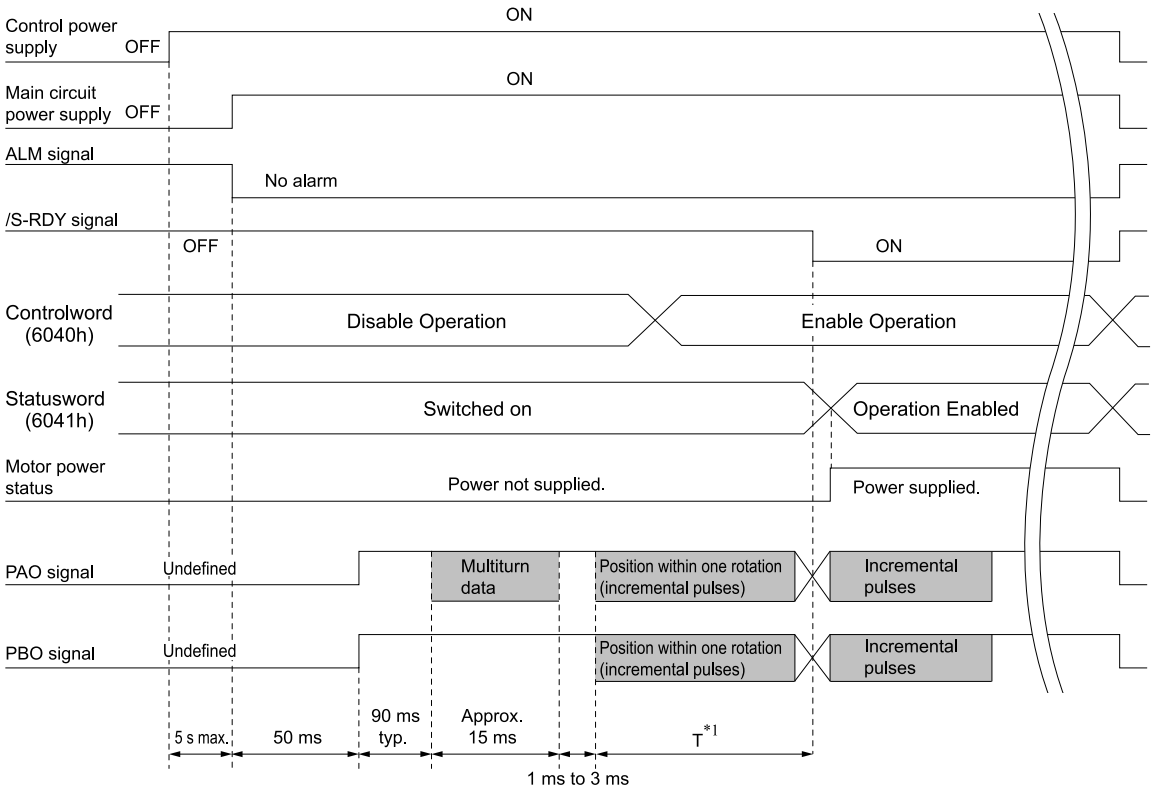

*1 The pulse output time T for the position of the absolute encoder within one rotation depends on the setting of Pn212 (Number of Encoder Output Pulses). Refer to the following table.

Setting of Pn212 (2212h)	Calculation of the Pulse Output Speed for the Position of the Absolute Encoder within One Rotation	Calculation of the Pulse Output Time T for the Position of the Absolute Encoder within One Rotation
16 to 16384	680 × Pn212 / 16384 [kpps]	25 ms max.
16386 to 32768	680 × Pn212 / 32768 [kpps]	50 ms max.
32722 to 65536	680 × Pn212 / 65536 [kpps]	100 ms max.
65544 to 131072	680 × Pn212 / 131072 [kpps]	200 ms max.
131088 to 262144	680 × Pn212 / 262144 [kpps]	400 ms max.
262176 to 524288	680 × Pn212 / 524288 [kpps]	800 ms max.
524352 to 1048576	680 × Pn212 / 1048576 [kpps]	1600 ms max.

6.8.5 Transmission Specifications

The position data transmission specifications for the PAO (Encoder Divided Pulse Output) signal are given in the following table.

The PAO signal sends only the multiturn data.

Refer to the following section for the timing of sending the position data from the absolute encoder.

☞ *6.8.4 Reading the Position Data from the Absolute Encoder on page 263*

Item	PAO Signal
Synchronization Method	Start-stop synchronization (ASYNC)
Transmission Speed	9600 bps
Start Bits	1 bit
Stop Bits	1 bit
Parity	Even
Character Code	ASCII, 7 bits
Data Format	Refer to data format of PAO signal.
Data Output Cycle	Only once after the control power is turned ON

(1) Data Format of PAO Signal

As shown below, the message format consists of eight characters: “P,” the sign, the 5-digit multiturn data, and “CR” (which indicates the end of the message).

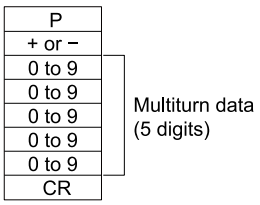

6.8.6 Calculating the Current Position in Machine Coordinates

When you reset the absolute encoder, the reset position becomes the reference position.

The host controller reads the coordinate Ps from the origin of the encoder coordinate system. The host controller must record the value of coordinate Ps.

This section describes the reference position in the machine coordinate system.

The method to calculate the coordinate value of the present position from the origin of the machine coordinate system is given below.

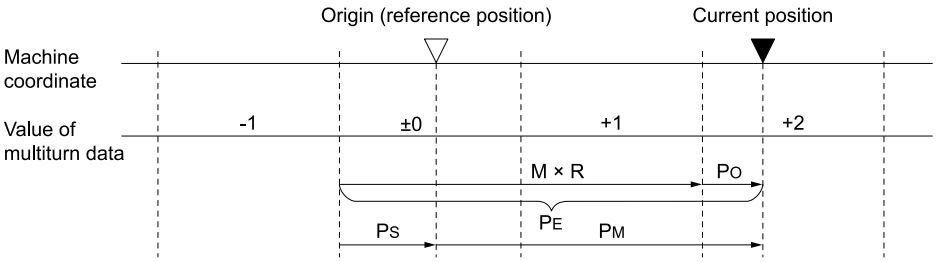

The current position P_M in the machine coordinate system is calculated as follows:

$P_M = P_E - P_S$

$P_E = M \times R + P_O$

$P_S = M_S \times R + P_S'$

Symbol	Meaning
P_E	Position data for the current position of the absolute encoder
M	Current position of the multiturn data of the absolute encoder
P_O	Position of the current position within one rotation
P_S	Position data of the absolute encoder when absolute encoder was reset
M_S	Multiturn data of the absolute encoder when absolute encoder was reset
P_S'	Position of the absolute encoder within one rotation when absolute encoder was reset
P_M	Current position in machine coordinate system
R	Pulse output for one encoder rotation

Note:

The calculations for Pn000 = n.□□□1 (reverse rotation mode) are given below.

$P_M = P_E - P_S$

$P_E = -M \times R + P_O$

$P_S = M_S \times R + P_S'$

Information

1. If you are using a rotary servomotor, you must reset the absolute encoder. Refer to the following section for information on resetting the absolute encoder.
☞ *5.15 Resetting the Absolute Encoder on page 217*
2. You can set the origin to a different position from the reset position. Refer to the following section for information on the origin position offset.
☞ *5.16 Setting the Origin of the Absolute Encoder on page 220*

6.8.7 Multiturn Limit Setting

The multiturn limit is used in position control for a turntable or other rotating body.

For example, consider a machine that moves the turntable shown in the following diagram in only one direction.

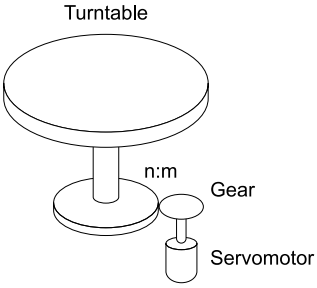

Because the turntable moves in only one direction, the upper limit to the number of rotations that can be counted by an absolute encoder will eventually be exceeded.

The multiturn limit is used in cases like this to prevent fractions from being produced by the integral ratio of the number of servomotor rotations and the number of turntable revolutions.

For a machine with a ratio of n:m between the number of servomotor rotations and the number of turntable rotations, as shown above, the value of m minus 1 will be the setting of Pn205 (Multiturn Limit).

Pn205 (Multiturn Limit) = m − 1

If m = 100 and n = 3 (i.e., the turntable rotates three times for each 100 servomotor rotations), the relationship between the number of servomotor rotations and the number of turntable rotations would be as shown below.

Set Pn205 to 99.

Pn205 = 100 – 1 = 99

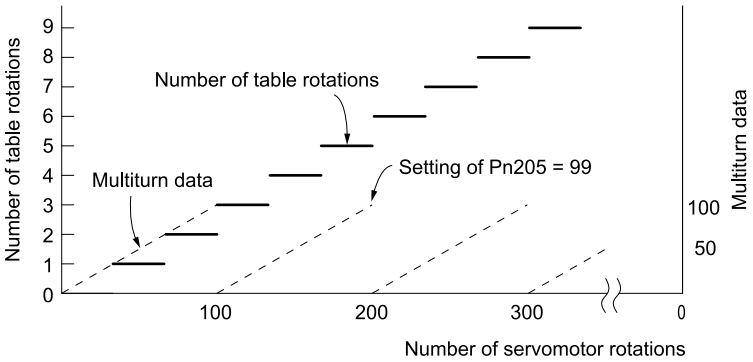

Pn205 (2205h)	Multiturn Limit			Speed Pos Trq
	Setting Range	Setting Unit	Default Setting	When Enabled
	0 to 65535	1 rev	65535	After restart

Note:

This parameter is enabled when you use an absolute encoder.

The data will change as shown below when this parameter is set to anything other than the default setting.

- If the servomotor operates in the reverse direction when the multiturn data is 0, the multiturn data will change to the value set in Pn205.
- If the servomotor operates in the forward direction when the multiturn data is at the value set in Pn205, the multiturn data will change to 0.

Set Pn205 to one less than the desired multiturn data.

If you change the setting of Pn205, an A.CC0 alarm (Multiturn Limit Disagreement) will be displayed because the setting disagrees with the value in the encoder. Refer to the following section for the procedure to change the multiturn limit settings in the encoder.

☞ *6.8.8 A.CC0 (Multiturn Limit Disagreement Alarm) on page 266*

Default Setting	Not Default Setting
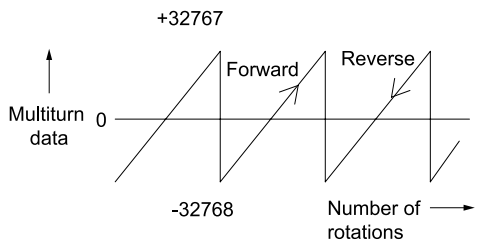	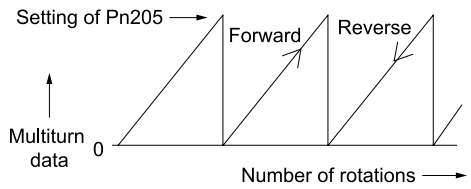

Information

The multiturn data will always be zero in the following cases. It is never necessary to reset the absolute encoder in these cases.

- When you use a single-turn absolute encoder
- When Pn002 is set to n.□2□□ (use the encoder as a single-turn absolute encoder)

A.810 and A.820 (alarms related to the absolute encoder) will also not occur.

6.8.8 A.CC0 (Multiturn Limit Disagreement Alarm)

If you change the multiturn limit in Pn205 (Multiturn Limit), an A.CC0 alarm (Multiturn Limit Disagreement) will be displayed because the setting disagrees with the value in the encoder.

Display	Name	Meaning
A.CC0	Multiturn Limit Disagreement	Different multiturn limits are set in the encoder and SERVOPACK.

If this alarm is displayed, use the following procedure to change the multiturn limit in the encoder to the same value as the setting of Pn205.

(1) Applicable Tools

The following table lists the tools that you can use to set the multiturn limit.

Tool	Fn No./Function Name	Operating Procedure Reference
Digital Operator	Fn013	Σ-7/Σ-X-Series Digital Operator Operating Manual (Manual No.: SIEP S800001 33)
SigmaWin+	[Encoder Setting] – [Multiturn Limit Setup]	*(2) Operating Procedure on page 267*
EtherCAT Communications	SERVOPACK Adjusting Command (2710h)	*15.5.7 SERVOPACK Adjusting Command (2710h) on page 649*

(2) Operating Procedure

Use the following procedure to adjust the multiturn limit setting.

1. **Click the [ ] button for the servo drive in the workspace of the Main Window of the SigmaWin+.**
2. **Click [Multi-turn Limit Setup] in the [Menu] window.**

   The [Multiturn Limit Setting] window will be displayed.
3. **Click the [Continue] button.**

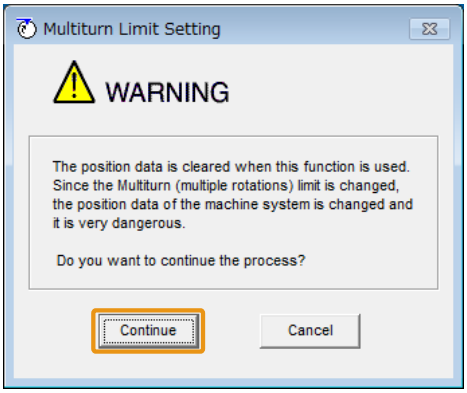

   Click the [Cancel] button to cancel setting the multiturn limit.

   The Main Window will return.
4. **Change the setting.**

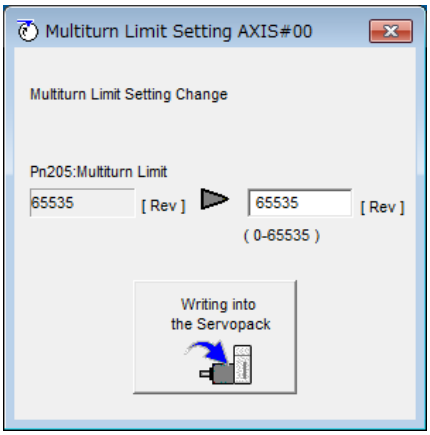

5. **Click the [Writing into the Servopack] button.**

6. **Click the [OK] button.**

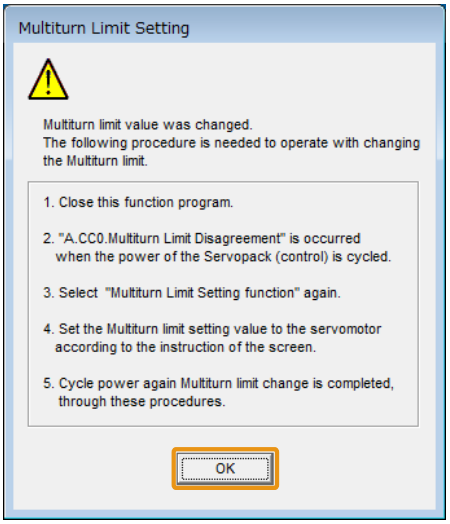

7. **Turn the power to the SERVOPACK OFF and ON again.**

   An A.CC0 alarm (Multiturn Limit Disagreement) will occur because setting the multiturn limit in the servomotor is not yet completed even though the setting has been changed in the SERVOPACK.

8. **Click [Multi-turn Limit Setup] in the [Menu] window.**

9. **Click the [Continue] button.**

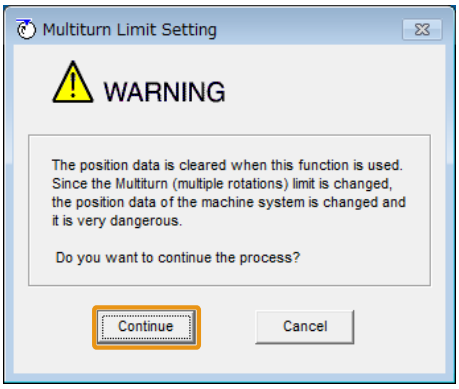

10. **Click the [Writing into the servomotor] button.**

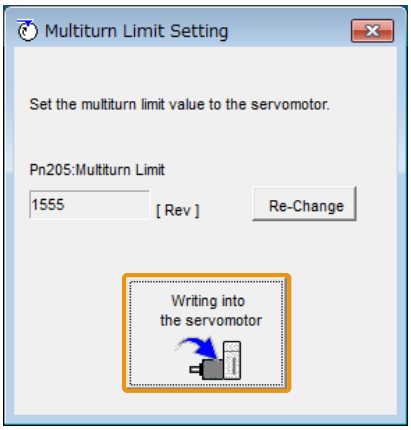

11. **Click the [OK] button.**

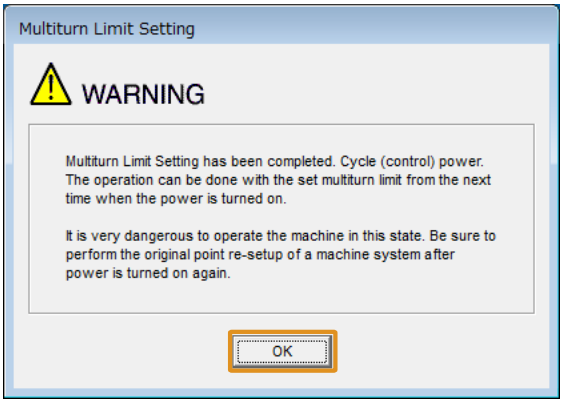

This concludes the procedure to set the multiturn limit.

6.9 Absolute Linear Encoders

The absolute linear encoder records the current position of the stop position even when the power is OFF.

With a system that uses an absolute linear encoder, the host controller can monitor the current position. Therefore, it is not necessary to perform an origin return operation when the power to the system is turned ON.

There are two types of linear encoders for linear servomotors. The usage of the linear encoder is specified in Pn002 = n.□X□□.

Refer to the following section for linear encoder models.

☞ ◆ *Feedback Resolution of Linear Encoder: Incremental Linear Encoder on page 211*

☞ ◆ *Feedback Resolution of Linear Encoder: Absolute Linear Encoder on page 212*

- Parameter Settings When Using an Incremental Linear Encoder

Parameter		Meaning	When Enabled
Pn002 (2002h)	**n.□0□□ (default setting)**	Use the encoder as an incremental linear encoder.	After restart
	n.□1□□	Use the encoder as an incremental linear encoder.	

- Parameter Settings When Using an Absolute Linear Encoder

Parameter		Meaning	When Enabled
Pn002 (2002h)	**n.□0□□ (default setting)**	Use the encoder as an absolute linear encoder.	After restart
	n.□1□□	Use the encoder as an incremental linear encoder.	

6.9.1 Connecting an Absolute Linear Encoder

You can get the position data from the absolute linear encoder with EtherCAT communications.

Therefore, it is not necessary to wire the PAO, PBO, and PCO (Encoder Divided Pulse Output) signals.

If they need to be wired, refer to the following section.

☞ *4.4.3 Wiring the SERVOPACK to the Encoder on page 144*

☞ *4.5.3 I/O Signal Wiring Examples on page 156*

6.9.2 Structure of the Position Data of the Absolute Linear Encoder

The position data of the absolute linear encoder is the distance (number of pulses) from the origin of the absolute linear encoder.

The position data is signed 36-bit data.

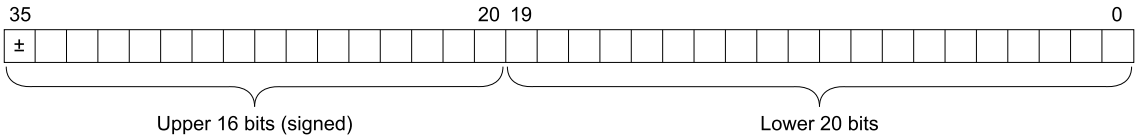

When the SERVOPACK sends the position data, it sends the upper 16-bit data (with sign) separately from the lower 20-bit data.

6.9.3 Output Ports for the Position Data from the Absolute Linear Encoder

You can read the position data of the absolute linear encoder from the PAO, PBO, and PCO (Encoder Divided Pulse Output) signals.

The output method and timing for the position data of the absolute linear encoder are different in each case.

A conceptual diagram of the connections of the PAO, PBO, and PCO (Encoder Divided Pulse Output) ports to the host controller is provided below.

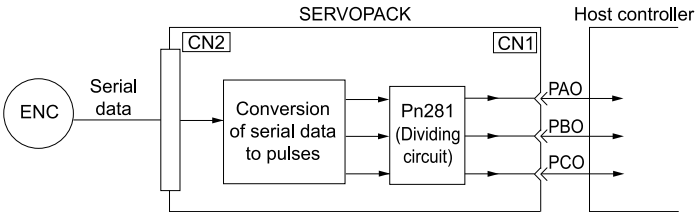

Signal	Status	Signal Contents
		When Using an Absolute Linear Encoder
PAO	First signal	Upper 16-bit data (with sign) Lower 20-bit data (pulse train)
	During normal operation	Incremental pulses
PBO	First signal	Lower 20-bit data (pulse train)
	During normal operation	Incremental pulses
PCO	Always	Origin pulse

The PAO (Encoder Divided Pulse Output) signal outputs the position data from the absolute linear encoder after the control power is turned ON.

The position data of the absolute linear encoder is the current stop position. The absolute linear encoder outputs the upper 16-bit data (with sign) according to the specified protocol. The absolute linear encoder outputs the lower 20-bit data as a pulse train. It then outputs pulses as an incremental linear encoder (incremental operation status).

The host controller must have a reception circuit (e.g., UART) for the position data from the absolute linear encoder. The pulse counter at the host controller will not count pulses when the upper 16-bit data (with sign) (communications message) is input because only phase A is input.

The output circuits for the PAO, PBO, and PCO signals use line drivers. Refer to the following section for details on line drivers.

☞ *4.5.4 I/O Circuits on page 157*

6.9.4 Reading the Position Data from the Absolute Linear Encoder

The sequence to read the position data from the absolute linear encoder of a linear servomotor is given below.

The upper 16-bit position data (with sign) are sent according to the transmission specifications.

The lower 20-bit data is output as a pulse train.

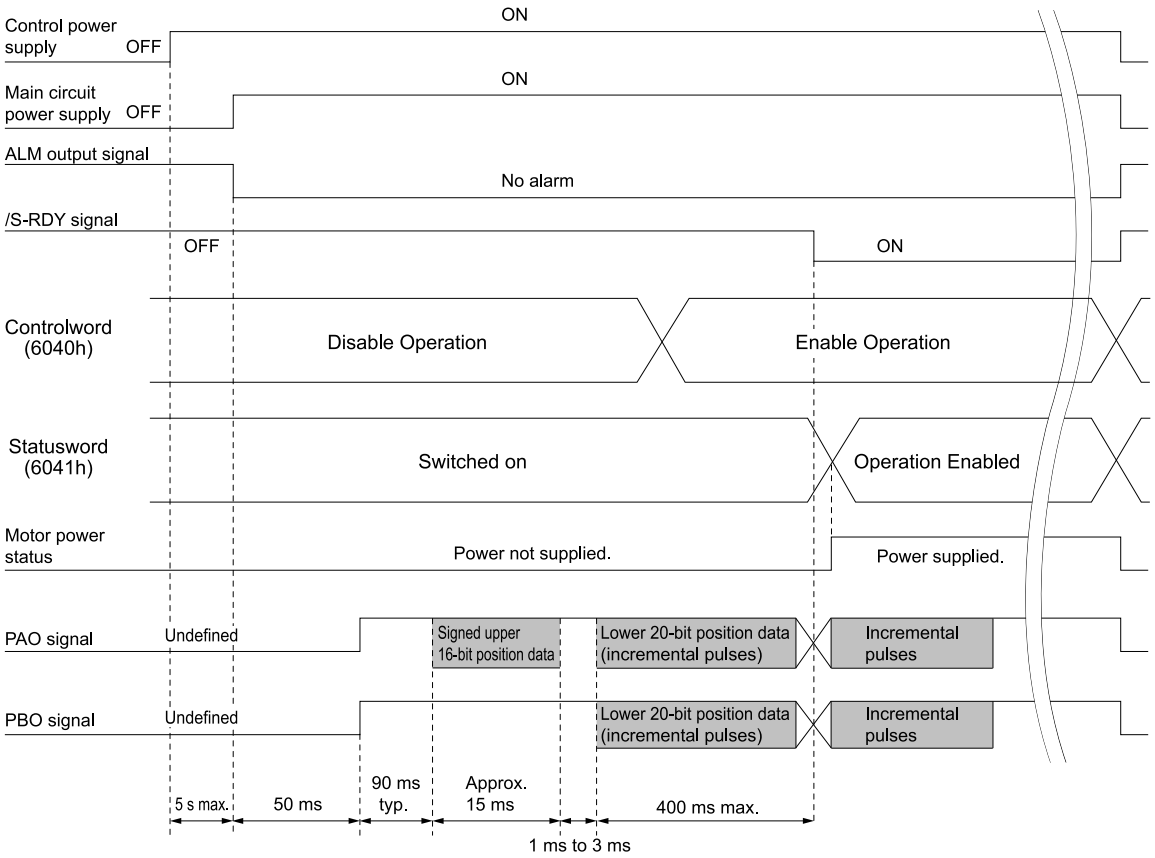

6.9.5 Transmission Specifications

The position data transmission specifications for the PAO (Encoder Divided Pulse Output) signal are given in the following table.

The PAO signal sends only the 16-bit data (with sign).

Refer to the following section for the timing of sending the position data from the absolute encoder.

☞ *6.9.4 Reading the Position Data from the Absolute Linear Encoder on page 271*

Item	PAO Signal
Synchronization Method	Start-stop synchronization (ASYNC)
Transmission Speed	9600 bps
Start Bits	1 bit
Stop Bits	1 bit
Parity	Even
Character Code	ASCII, 7 bits
Data Format	Refer to data format of PAO signal.
Data Output Cycle	Only once after the control power is turned ON

(1) Data Format of PAO Signal

As shown below, the message format consists of eight characters: “P,” the sign, the 5-digit upper 15-bit position data, and “CR” (which indicates the end of the message).

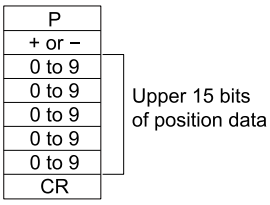

6.9.6 Calculating the Current Position in Machine Coordinates

With an absolute linear encoder, you must set the position of the origin (i.e., the origin of the machine coordinate system).

The host controller reads the coordinate from the origin of the encoder coordinate system. The host controller must record the value of this coordinate.

The method to calculate the coordinate value of the present position from the origin of the machine coordinate system is given below.

The position data from the absolute linear encoder is signed 36-bit data, but the upper 16 bits (with sign) and the lower 20 bits are output separately.

For the upper 16-bit data (with sign), the upper bits (16 bits, including the sign) of the current position after dividing by the setting of Pn281 are output with serial communications according to the transmission specifications.

For the lower 20-bit data , the lower bits (20 bits) of the current position after dividing by the setting of Pn281 are output as a pulse train.

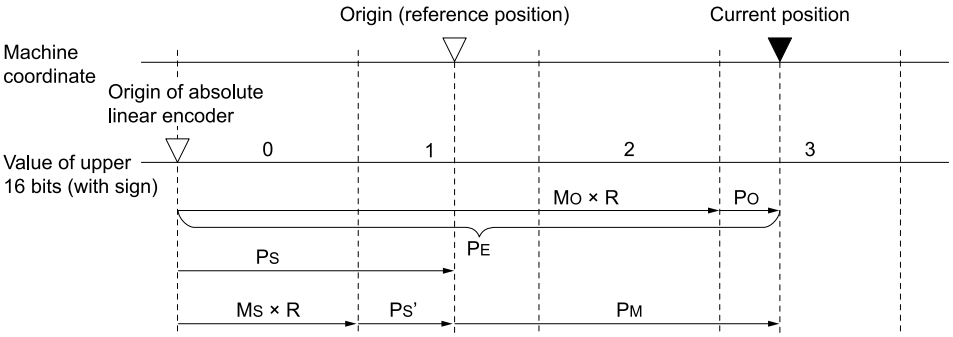

The current position P_M in the machine coordinate system is calculated as follows:

$P_M = P_E - P_S$

$P_E = M_O \times R + P_O$

$P_S = M_S \times R + P_S'$

Symbol	Meaning
P_E	Position data for the current position of the absolute linear encoder
M_O	Upper 16 bits (with sign) of the position data for the current position of the absolute linear encoder
P_O	Lower 20 bits of the position data for the current position of the absolute linear encoder
P_S	Position data of the origin
M_S	Upper 16 bits (with sign) of the position data of the origin
P_S'	Lower 20 bits of the position data of the origin
P_M	Current position in machine coordinate system
R	1048576 (= 2^{20})

Note:

The above calculations are also used for Pn000 = n.□□□1 (reverse movement mode).

Information If you are using a linear servomotor, you do not need to reset the absolute linear encoder to define the origin. (Some absolute linear encoders also allow you to set any position as the origin.)

6.10 Software Reset

You can reset the SERVOPACK internally with the software. Reset the SERVOPACK in the following cases:

- For a parameter in which the setting is applied after restart, to change the setting of that parameter without turning OFF the power to the SERVOPACK.
- To reset an alarm without turning OFF the power to the SERVOPACK.

Information
- Always confirm that the servo is OFF and servomotor is stopped before you start a software reset.
- This function resets the SERVOPACK independently of the host controller. The SERVOPACK carries out the same processing as when the power is turned ON and outputs the ALM (Servo Alarm Output) signal. The status of other output signals may be forcibly changed.
- When you execute a software reset, the SERVOPACK will not respond for approximately five seconds.
  Before you execute a software reset, check the status of the SERVOPACK and servomotor and make sure that no problems will occur.

6.10.1 Preparations

Always check the following before you perform a software reset.

- The servo must be OFF.
- The motor must be stopped.

6.10.2 Applicable Tools

The following table lists the tools that you can use to perform a software reset.

Tool	Fn No./Function Name	Operating Procedure Reference
Digital Operator	Fn030	Σ-7/Σ-X-Series Digital Operator Operating Manual (Manual No.: SIEP S800001 33)
SigmaWin+	[Basic Functions] – [Software Reset]	*6.10.3 Operating Procedure on page 274*

6.10.3 Operating Procedure

Use the following procedure to perform a software reset.

1. **Click the [ ] button for the servo drive in the workspace of the Main Window of the SigmaWin+.**
2. **Select [Software Reset] in the [Menu] window.**

   The [Software Reset] window will be displayed.
3. **Read the precaution and then click the [Execute] button.**

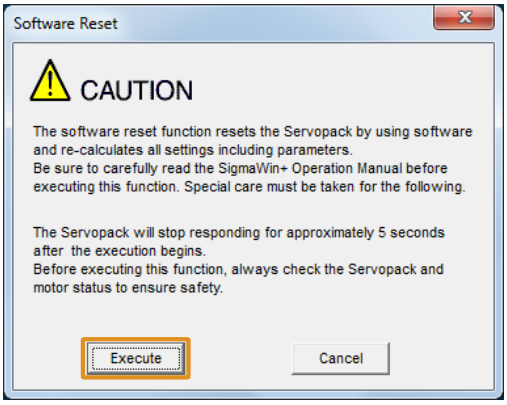

Click the [Cancel] button to cancel the software reset. The Main Window will return.

4. **Click the [Execute] button.**

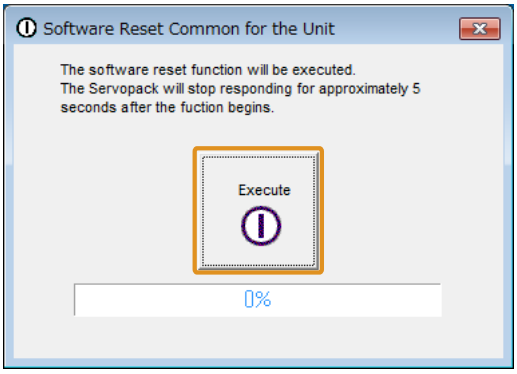

5. **Read the precaution and then click the [OK] button to end the software reset.**

All settings including parameters will have been re-calculated. When you finish this operation, disconnect the SigmaWin+ from the SERVOPACK, and then connect it again.

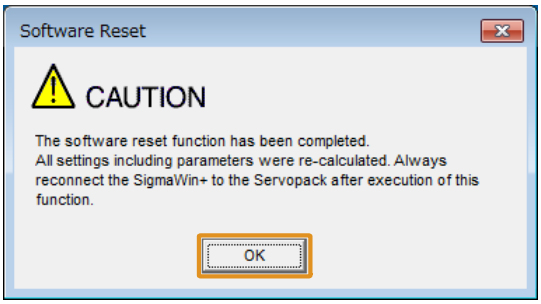

This concludes the procedure to reset the software.

6.11 Vibration Detection Level Initialization

You can detect machine vibration during operation to automatically adjust the settings of Pn312 or Pn384 (Vibration Detection Level) to detect A.520 alarms (Vibration Alarm) and A.911 warnings (Vibration) more precisely.

This function detects specific vibration components in the servomotor speed.

		Vibration Detection Selection (Speed, Pos, Trq)		When Enabled
Pn310 (2310h)	n.□□□X	0 Default	Do not detect vibration.	Immediately
		1	Output a warning (A.911) if vibration is detected.	
		2	Output an alarm (A.520) if vibration is detected.	

If the vibration exceeds the detection level calculated with the following formula, an alarm or warning occurs according to Pn310 (Vibration Detection Selection).

- Rotary Servomotors

$$\text{Detection level} = \frac{\text{Pn312 [min}^{-1}\text{] (Vibration detection level)} \times \text{Pn311 [\%] (Vibration detection sensitivity)}}{100}$$

- Linear Servomotors

$$\text{Detection level} = \frac{\text{Pn384 [mm/s] (Vibration detection level)} \times \text{Pn311 [\%] (Vibration detection sensitivity)}}{100}$$

Use this function only if A.520 or A.911 alarms are not output at the correct timing when vibration is detected with the default setting of Pn312 or Pn384 (Vibration Detection Level).

There will be discrepancies in the detection sensitivity for vibration alarms and warnings depending on the condition of your machine. If there is a discrepancy, use the above formula to adjust the setting of Pn311 (Vibration Detection Sensitivity).

	Vibration Detection Sensitivity (Speed, Pos, Trq)			
Pn311 (2311h)	Setting Range	Setting Unit	Default Setting	When Enabled
	50 to 500	1%	100	Immediately

Information

- Vibration may not be detected because of unsuitable servo gains. Also, not all kinds of vibrations can be detected.
- Set a suitable value to Pn103 (Moment of Inertia Ratio). An unsuitable setting may result in falsely detecting or not detecting vibration alarms or vibration warnings.
- To use this function, you must input the actual references that will be used to operate your system.
- Execute this function under the operating conditions for which you want to set the vibration detection level.
- Execute this function while the servomotor is operating at 10% of its maximum speed or faster.

6.11.1 Preparations

Always check the following before you initialize the vibration detection level.

- The parameters must not be write prohibited.
- Pn00C must be set to n.□□□0 (Function Selection for Test without a Motor is disabled).

6.11.2 Applicable Tools

The following table lists the tools that you can use to initialize the vibration detection level.

Tool	Fn No./Function Name	Operating Procedure Reference
Digital Operator	Fn01B	Σ-7/Σ-X-Series Digital Operator Operating Manual (Manual No.: SIEP S800001 33)
SigmaWin+	[Others] – [Initialize Vibration Detection Level]	*6.11.3 Operating Procedure on page 277*

6.11.3 Operating Procedure

Use the following procedure to initialize the vibration detection level.

1. **Click the [ ] button for the servo drive in the workspace of the Main Window of the SigmaWin+.**
2. **Select [Initialize Vibration Detection Level] in the [Menu] window.**

   The [Initialize Vibration Detection Level] window will be displayed.
3. **Select [Pn311: Vibration Detection Sensitivity] and [Pn310: Vibration Detection Selections] and then click the [Detection Start] button.**

   A setting execution standby mode will be entered.

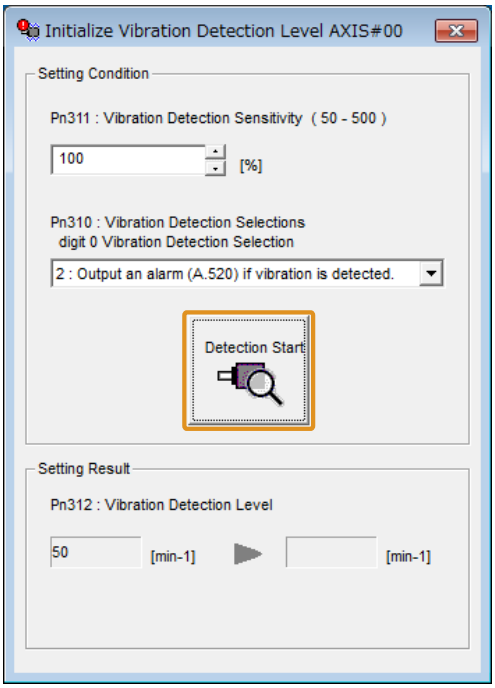

4. **Click the [Execute] button.**

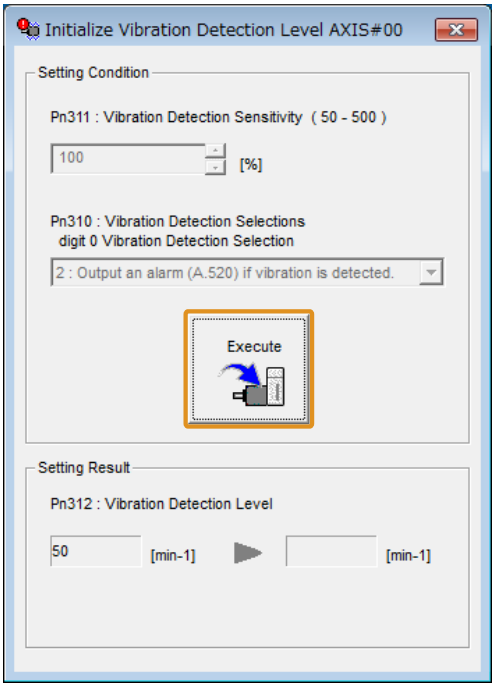

The newly set vibration detection level will be displayed and the value will be saved in the SERVOPACK.

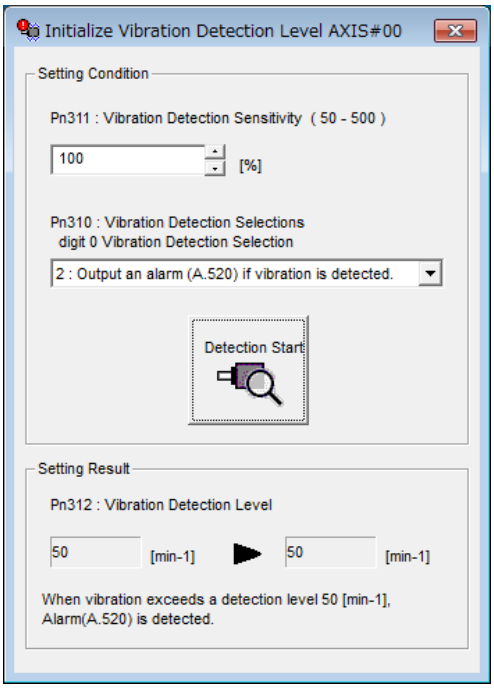

This concludes the procedure to initialize the vibration detection level.

6.11.4 Related Parameters

The following three items are given in the following table.

- Parameters Related to this Function
  These are the parameters that are used or referenced when this function is executed.
- Changes during Function Execution
  Not allowed: The parameter cannot be changed using the SigmaWin+ or other tool while this function is being executed.
  Allowed: The parameter can be changed using the SigmaWin+ or other tool while this function is being executed.
- Automatic Changes after Function Execution
  Yes: The parameter is automatically set or adjusted after execution of this function.
  No: The parameter is not automatically set or adjusted after execution of this function.

Parameter	Name	Setting Changes	Automatic Changes
Pn311 (2311h)	Vibration Detection Sensitivity	Allowed	No
Pn312 (2312h)	Vibration Detection Level	Not allowed	Yes
Pn384 (2384h)	Vibration Detection Level	Not allowed	Yes

6.12 Adjusting the Motor Current Detection Signal Offset

The motor current detection signal offset is used to reduce ripple in the torque. You can adjust the motor current detection signal offset either automatically or manually.

6.12.1 Automatic Adjustment

Perform this adjustment only if highly accurate adjustment is required to reduce torque ripple.
It is normally not necessary to adjust this offset.

Important: Execute the automatic offset adjustment if the torque ripple is too large when compared with other SERVOPACKs.

Information: The offset does not use a parameter, so it will not change even if the parameter settings are initialized.

(1) Preparations

Always check the following before you automatically adjust the motor current detection signal offset.

- The main circuit power must be ON.
- The servo must be OFF.
- The servomotor must be stopped.
- There must be no hard wire base block (HWBB).
- The parameters must not be write prohibited.

(2) Applicable Tools

The following table lists the tools that you can use to perform automatic tuning.

Tool	Fn No./Function Name	Operating Procedure Reference
Digital Operator	Fn00E	Σ-7/Σ-X-series Digital Operator Operating Manual (Manual No.: SIEP S800001 33)
SigmaWin+	[Others] –[Adjust the Motor Current Detection Signal Offsets]	*(3) Operating Procedure on page 279*
EtherCAT Communications	SERVOPACK Adjusting Command (2710h)	*15.5.7 SERVOPACK Adjusting Command (2710h) on page 649*

(3) Operating Procedure

Use the following procedure to automatically adjust the motor current detection signal offset.

1. **Click the [ ] button for the servo drive in the workspace of the Main Window of the SigmaWin+.**
2. **Click [Adjust the Motor Current Detection Signal Offsets] in the [Menu] window.**

   The [Adjust the Motor Current Detection Signal Offsets] window will be displayed.

3. **Click the [Continue] button.**

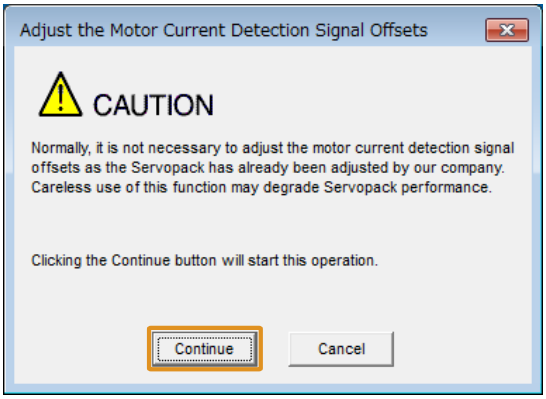

4. **Click the [Automatic Adjustment] tab in the [Adjust the Motor Current Detection Signal Offsets] window.**

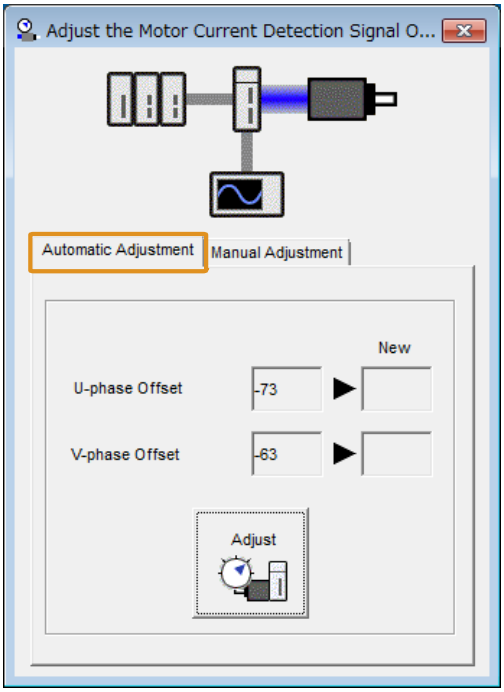

5. **Click the [Adjust] button.**

The values that result from automatic adjustment will be displayed in the [New] boxes.

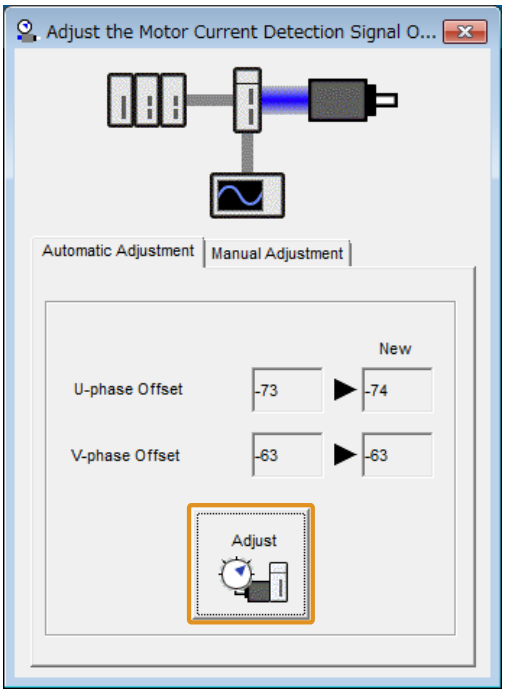

This concludes the procedure to automatically adjust the motor current detection signal offset.

6.12.2 Manual Adjustment

You can use this function if you automatically adjust the motor current detection signal offset and the torque ripple is still too large.

Important

If the offset is incorrectly adjusted with this function, the servomotor characteristics may be adversely affected.

Observe the following precautions when you manually adjust the offset.

- Operate the servomotor at a speed of approximately 100 min^{-1}.
- Adjust the offset while monitoring the torque reference with the analog monitor until the ripple is minimized.
- Adjust the offsets for the phase-U current and phase-V current of the servomotor so that they are balanced. Alternately adjust both offsets several times.

Information The offset does not use a parameter, so it will not change even if the parameter settings are initialized.

(1) Preparations

Always check the following before you manually adjust the motor current detection signal offset.

- The parameters must not be write prohibited.

(2) Applicable Tools

The following table lists the tools that you can use to perform manual tuning.

Tool	Fn No./Function Name	Operating Procedure Reference
Digital Operator	Fn00F	Σ-7/Σ-X-Series Digital Operator Operating Manual (Manual No.: SIEP S800001 33)
SigmaWin+	[Others] –[Adjust the Motor Current Detection Signal Offsets]	*(3) Operating Procedure on page 281*

(3) Operating Procedure

Use the following procedure to manually adjust the motor current detection signal offset.

1. **Operate the servomotor at approximately 100 min^{-1}.**

2. **Click the [ ] button for the servo drive in the workspace of the Main Window of the SigmaWin+.**
3. **Click [Adjust the Motor Current Detection Signal Offsets] in the [Menu] window.**

   The [Adjust the Motor Current Detection Signal Offsets] window will be displayed.
4. **Click the [Continue] button.**

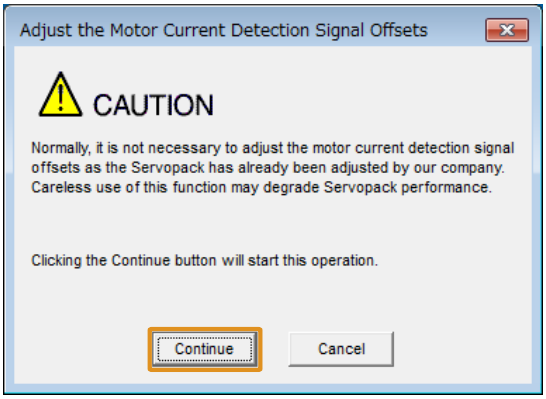

5. **Click the [Manual Adjustment] tab in the [Adjust the Motor Current Detection Signal Offsets] window.**

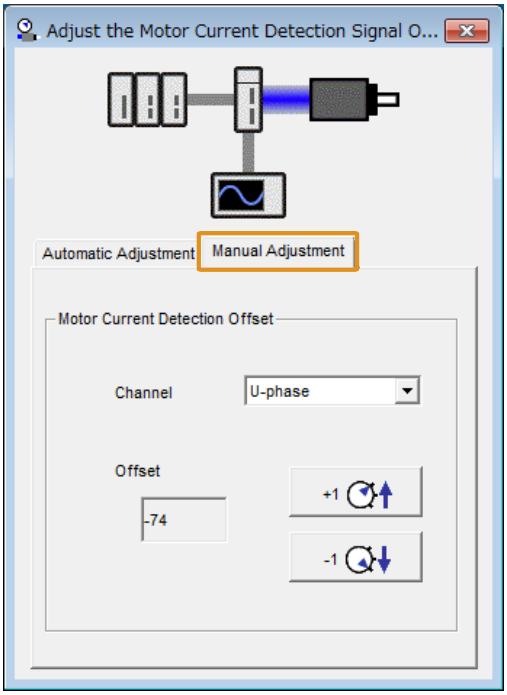

6. **Set the [Channel] in the [Motor Current Detection Offset] to [U-phase].**
7. **Use the [+1] and [-1] buttons to adjust the offset for phase U.**

   Change the offset by about 10 in the direction that reduces the torque ripple.

   Adjustment range: -512 to +511
8. **Set the [Channel] in the [Motor Current Detection Offset] to [V-phase].**
9. **Use the [+1] and [-1] buttons to adjust the offset for phase V.**

   Change the offset by about 10 in the direction that reduces the torque ripple.
10. **Repeat steps 6 to 9 until the torque ripple cannot be decreased any further regardless of whether you increase or decrease the offsets.**
11. **Reduce the amount by which you change the offsets each time and repeat steps 6 to 9.**

This concludes the procedure to manually adjust the motor current detection signal offset.

6.13 Forcing the Motor to Stop

You can force the servomotor to stop for a signal from the host controller or an external device.

To force the motor to stop, you must set Pn516 to n.□□□X (FSTP (Forced Stop Input) Signal Allocation). You can specify one of the following stopping methods: dynamic brake (DB), coasting to a stop, or decelerating to a stop.

Note:

Forcing the motor to stop is not designed to comply with any safety standard. In this respect, it is different from the hard wire base block (HWBB).

Information **Panel Display and Digital Operator Display**

When a forced stop is performed, the panel and the digital operator will display "FSTP."

⚠ CAUTION

To prevent accidents that may result from contact faults or disconnections, use a normally closed switch for the Forced Stop Input signal.

6.13.1 FSTP (Forced Stop Input) Signal

Type	Signal	Connector Pin No.	Signal Status	Meaning
Input	FSTP	Must be allocated.	ON (closed)	Drive is enabled (normal operation).
			OFF (open)	The motor is stopped.

Note:

You must allocate the FSTP signal to use it. The parameters that you use depend on the allocation method.

Allocation Method	Parameter to Use
Σ-7S-compatible I/O Signal Allocation	• Pn50A = n.□□□1 (use Sigma-7S-compatible I/O signal allocations) • Pn516 = n.□□□X (FSTP (Forced Stop Input) Signal Allocation)
Σ-LINK II Input Allocations	• Pn50A= n.□□□2 (use SigmaLINK II input allocations) • Pn597 (FSTP (Forced Stop Input) Signal Allocation)

Refer to the following section for details.

☞ *6.1.3 Input Signal Allocations on page 232*

6.13.2 Stopping Method Selection for Forced Stops

Use Pn00A = n.□□X□ (Stopping Method for Forced Stops) to set the stopping method for forced stops.

		Stopping Method for Forced Stops (Speed, Pos, Trq)		When Enabled
Pn00A (200Ah)	n.□□X□	0 (Default)	Apply the dynamic brake or coast the motor to a stop (use the stopping method set in Pn001 (2001h) = n.□□□X).	After restart
		1	Decelerate the motor to a stop using the torque set in Pn406 (2406h) as the maximum torque. Use the setting of Pn001 (2001h) = n.□□□X for the status after stopping.	
		2	Decelerate the motor to a stop using the torque set in Pn406 (2406h) as the maximum torque and then let the motor coast.	
		3	Decelerate the motor to a stop using the deceleration time set in Pn30A (230Ah). Use the setting of Pn001 (2001h) = n.□□□X for the status after stopping.	
		4	Decelerate the motor to a stop using the deceleration time set in Pn30A (230Ah) and then let the motor coast.	

Note:

You cannot decelerate a servomotor to a stop during torque control. The servomotor will be stopped with the dynamic braking or coast to a stop according to the setting of Pn001 = n.□□□X (Motor Stopping Method for Servo OFF and Group 1 Alarms).

(1) Stopping the Servomotor by Setting Pn406 (Emergency Stop Torque)

To stop the servomotor by setting emergency stop torque, set Pn406 (Emergency Stop Torque).

If Pn00A = n.□□X□ is set to 1 or 2, the servomotor will be decelerated to a stop using the torque set in Pn406 as the maximum torque.

The default setting is 800%. This setting is large enough to allow you to operate the servomotor at instantaneous maximum torque. However, the maximum emergency stop torque that you can actually use is the instantaneous maximum torque of the servomotor.

Pn406 (2406h)	Emergency Stop Torque			Speed Pos Trq
	Setting Range	Setting Unit	Default Setting	When Enabled
	0 to 800	1%	800	Immediately

Note:

The setting unit is a percentage of the motor rated torque.

(2) Stopping the Servomotor by Setting Pn30A (Deceleration Time for Servo OFF and Forced Stops)

To specify the servomotor deceleration time and use it to stop the servomotor, set Pn30A (Deceleration Time for Servo OFF and Forced Stops).

Pn30A (230Ah)	Deceleration Time for Servo OFF and Forced Stops			Speed Pos Trq
	Setting Range	Setting Unit	Default Setting	When Enabled
	0 to 12000	1 ms	0	Immediately

If you set Pn30A to 0, the servomotor will be stopped with a zero speed.

The deceleration time that you set in Pn30A is the time to decelerate the servomotor from the maximum motor speed.

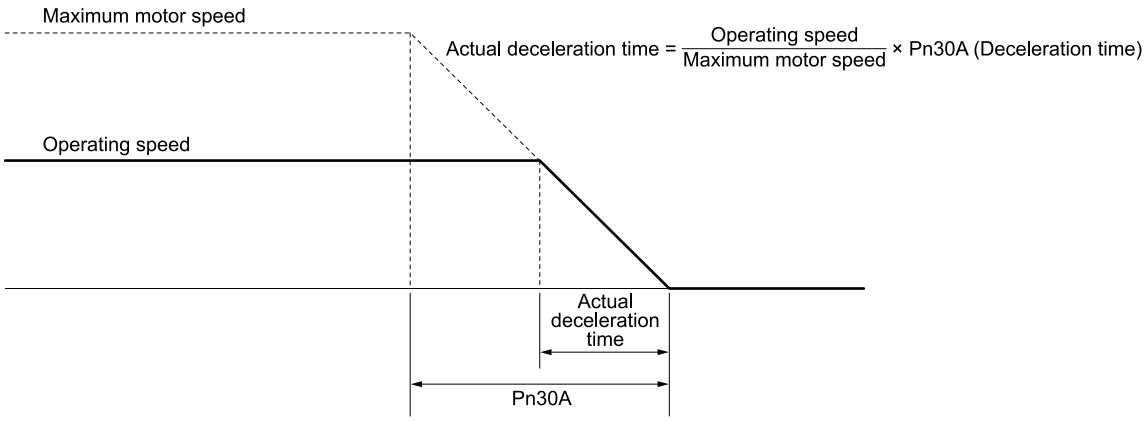

6.13.3 Resetting Method for Forced Stops

This section describes the reset methods that can be used after stopping operation for an FSTP (Forced Stop Input) signal.

If the FSTP (Forced Stop Input) signal is OFF and the Enable Operation command (Servo ON command) is input, the forced stop state will be maintained even after the FSTP signal is turned ON.

Send the Disable Operation command to place the SERVOPACK in the base block (BB) state and then send the Enable Operation command again.

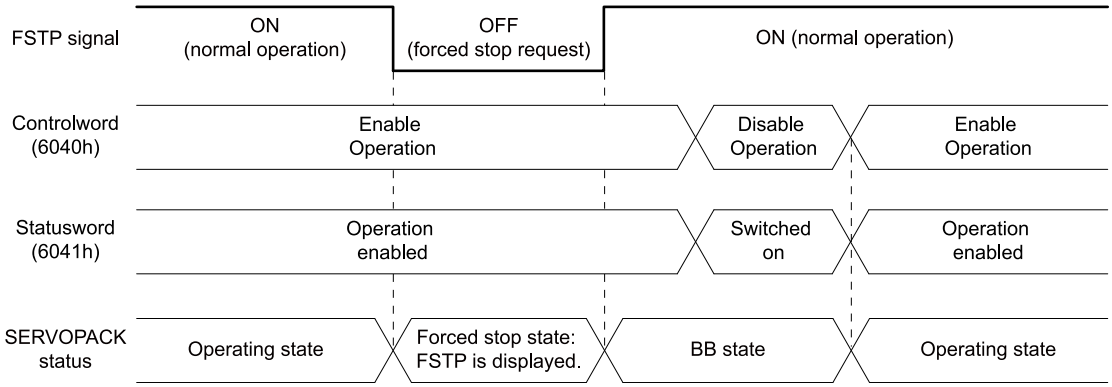
FSTP signal
ON
(normal operation)
OFF
(forced stop request)
ON (normal operation)
Controlword
(6040h)
Enable
Operation
Disable
Operation
Enable
Operation
Statusword
(6041h)
Operation
enabled
Switched
on
Operation
enabled
SERVOPACK
status
Operating state
Forced stop state:
FSTP is displayed.
BB state
Operating state

6.14 Overheat Protection

Overheat protection detects an A.93B warning (Overheat Warning) and an A.862 alarm (Overheat Alarm) by monitoring the overheat protection input signal from a Yaskawa SGLFW2 linear servomotor or from a sensor attached to the machine.

When you use overheat protection, you must wire the TH (Overheat Protection Input) signal and set Pn61A to n.□□□X (Overheat Protection Selection).

6.14.1 Connecting the Overheat Protection Input (TH) Signal

To use overheat protection, you must connect an overheat protection input (TH) signal to the SERVOPACK. This section describes the connection methods for the overheat protection input (TH) signal.

(1) Using Overheat Protection in the Linear Servomotor

(a) When Using a Serial Converter Unit

Connect the connector for the polarity sensor (hall sensor) and thermal protector of the linear servomotor to the serial converter unit.

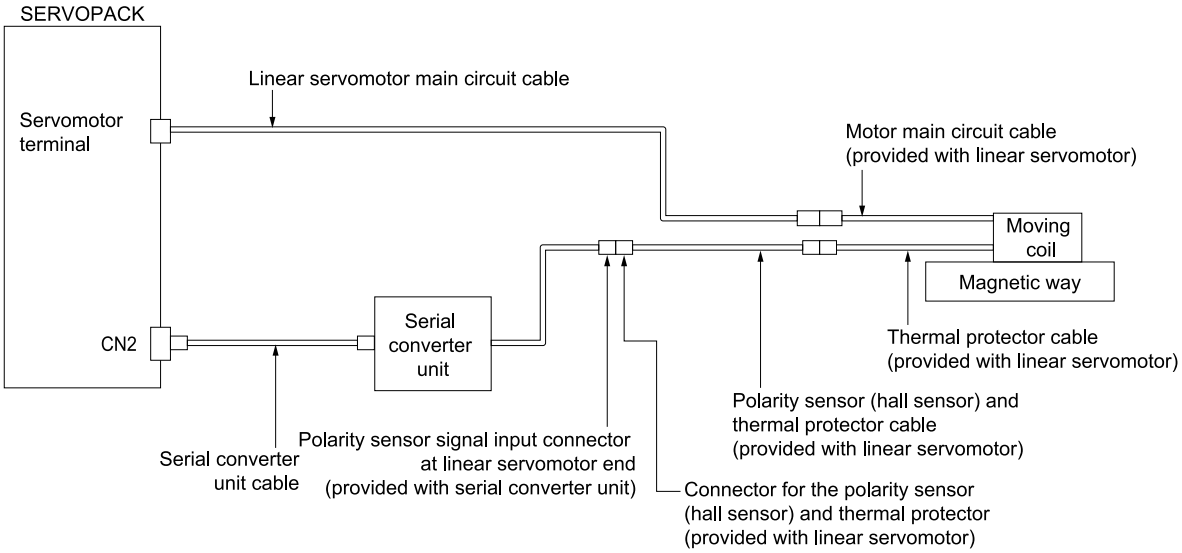

(b) When Not Using a Serial Converter Unit

Connect the thermal protector cable of the linear servomotor to CN1-5 on the SERVOPACK. The following figure shows a wiring example.

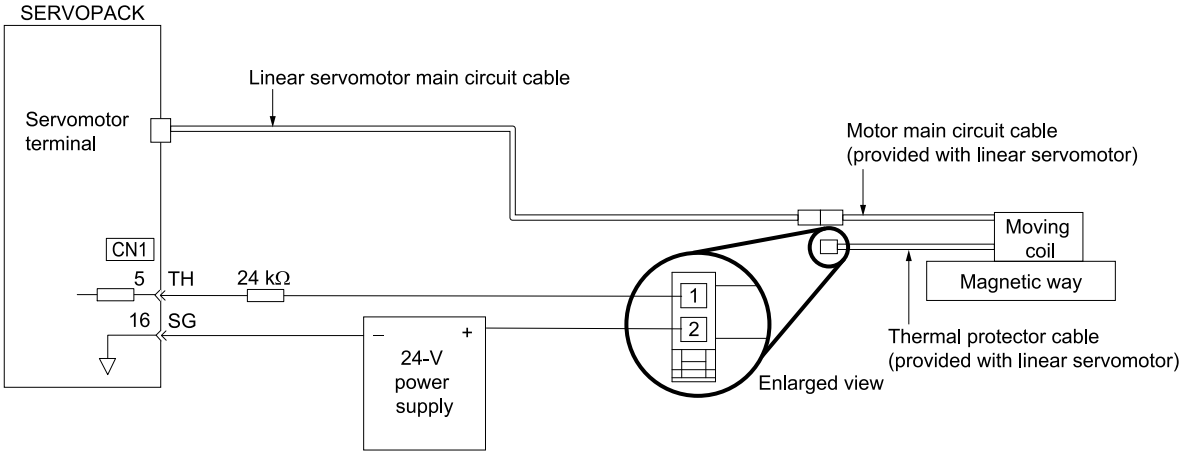

Important

- The thermal protector signal from the linear servomotor must be input to the host controller.
  This example shows the connection to the SERVOPACK.
  The thermal protector signal is closed when the temperature is normal and open when the thermal protector is activated.
  Do not exceed 3 A or 30 V.
- The recommended length of the thermal protector cable is 15 m maximum.
- The 24-V power supply and 24-kΩ resistor are not provided by Yaskawa. Use a 0.3 W or greater 24-V power supply, and use a 0.2 W or greater 24-kΩ resistor.
- Be sure to connect the positive and negative sides of the power supply correctly. Otherwise there is a risk of SERVOPACK failure.

(2) Using Overheat Protection for the Machine

To use overheat protection for the machine, connect the overheat protection input (an analog voltage input) from the sensor mounted to the machine to the CN1-5 on the SERVOPACK. The following figure shows a wiring example.

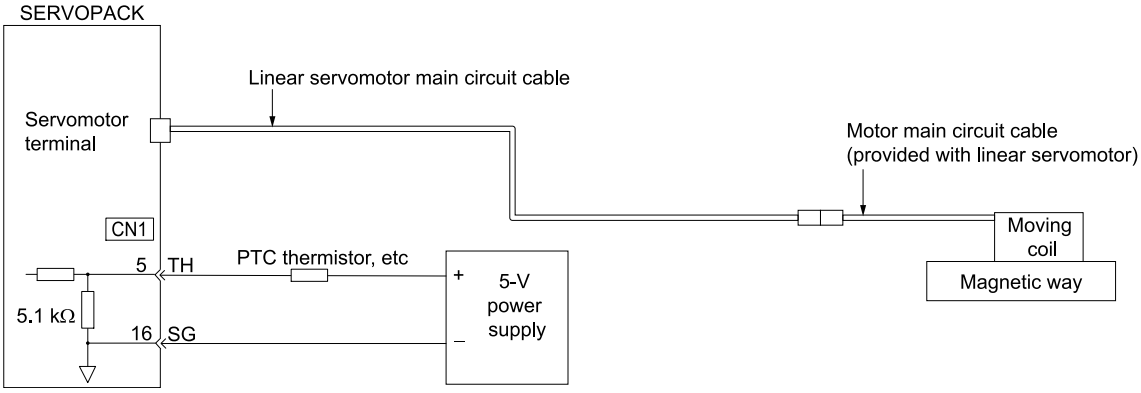

The equation when wired as shown in the above wiring example is as follows:

Input voltage = 5 V × 5.1 kΩ/(5.1 kΩ + thermistor resistance)

When an NTC thermistor is used, the input voltage increases because the thermistor resistance decreases when the temperature increases. The voltage input when an NTC thermistor is being used is called "positive voltage input" in this manual.

When a PTC thermistor is used, the input voltage decreases because the thermistor resistance increases when the temperature increases. The voltage input when a PTC thermistor is being used is called "negative voltage input" in this manual.

You must consider the following three elements for the detection error of overheat protection.

- SERVOPACK detection accuracy: ±5% (= 4.5 V maximum)
- Variations in the external 5-V power supply
- Variations in thermistor resistance

The following graph shows an example of the relationship between PTC thermistor input voltage and temperature.

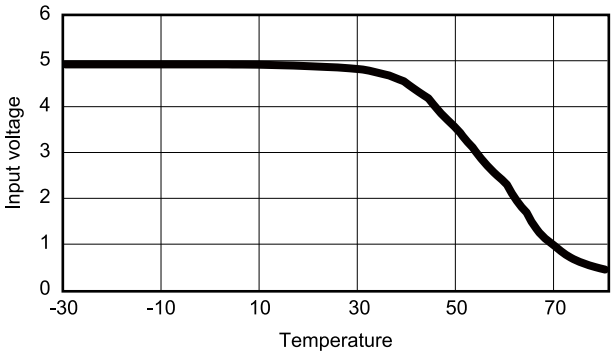

Important

- The 5-V power supply is not provided by Yaskawa.
- The customer is responsible for adjusting the detection level.
- Be sure to connect the positive and negative sides of the power supply correctly. Otherwise there is a risk of SERVOPACK failure.

6.14.2 Overheat Protection Selections

The overheat protection function is selected with Pn61A = n.□□□X (Overheat Protection Selections).

		Overheat Protection Selections Speed Pos Trq		When Enabled
Pn61A (261Ah)	n.□□□X	0 Default	Disable overheat protection.	After restart
		1	Use overheat protection in the Yaskawa linear servomotor.	
		2	Monitor a negative voltage input from a sensor attached to the machine and use overheat protection.	
		3	Monitor a positive voltage input from a sensor attached to the machine and use overheat protection.	

Important

The SGLFW2 is the only Yaskawa linear servomotor that supports this function.

(1) Using Overheat Protection in the Yaskawa Linear Servomotor

To use the overheat protection in the Yaskawa linear servomotor (SGLFW2), set Pn61A to n.□□□1.

An A.93B warning (Overheat Warning) will be detected if the TH (Overheat Protection Input) signal from the Yaskawa SGLFW2 linear servomotor exceeds the warning temperature.

An A.862 alarm (Overheat Alarm) will be detected if the TH (Overheat Protection Input) signal from the Yaskawa SGLFW2 linear servomotor exceeds the alarm temperature.

Important

1. If the overheat protection input signal line is disconnected or short-circuited, an A.862 alarm (Overheat Alarm) will occur.
2. If you set Pn61A to n.□□□1 (use overheat protection in the Yaskawa linear servomotor), the parameters in the servomotor are enabled and the following parameters are disabled.
   - Pn61B (Overheat Alarm Level)
   - Pn61C (Overheat Warning Level)
   - Pn61D (Overheat Alarm Filter Time)

(2) Monitoring the Machine's Temperature and Using Overheat Protection

Set Pn61A = n.□□□X to 2 or 3 to use overheat protection for the machine.

Set the following parameters as required.

Pn61B (261Bh)	Overheat Alarm Level Speed Pos Trq			
	Setting Range	Setting Unit	Default Setting	When Enabled
	0 to 500	0.01 V	250	Immediately
Pn61C (261Ch)	Overheat Warning Level Speed Pos Trq			
	Setting Range	Setting Unit	Default Setting	When Enabled
	0 to 100	1%	100	Immediately
Pn61D (261Dh)	Overheat Alarm Filter Time Speed Pos Trq			
	Setting Range	Setting Unit	Default Setting	When Enabled
	0 to 65535	1 s	0	Immediately

Important

1. When Pn61A is set to n.□□□2, an A.862 alarm (Overheat Alarm) will occur if the overheat protection input signal line is disconnected or short-circuited.
2. When Pn61A is set to n.□□□3, an A862 alarm will not occur if the overheat protection input signal line is disconnected or short-circuited. To ensure safety, we recommend that you connect the external circuits so that you can use a negative voltage input for the overheat protection input (an analog voltage input).
3. Set Pn61B to a value that matches the actually measured level of the connected sensor.
   Additionally, when Pn61B is set to a value of 450 (= 4.5 V) or higher, the detection error of the overheat alarm/warning will increase. For this reason, we recommend setting a value less than 450 (= 4.5 V).

6.15 Triggers at Preset Positions

6.15.1 Outline

Triggers at preset positions are signals that are output when a moving part of a machine passes preset reference positions. You can use this function to set signal outputs for up to 32 positions.

The following image shows the operation of triggers at preset positions.

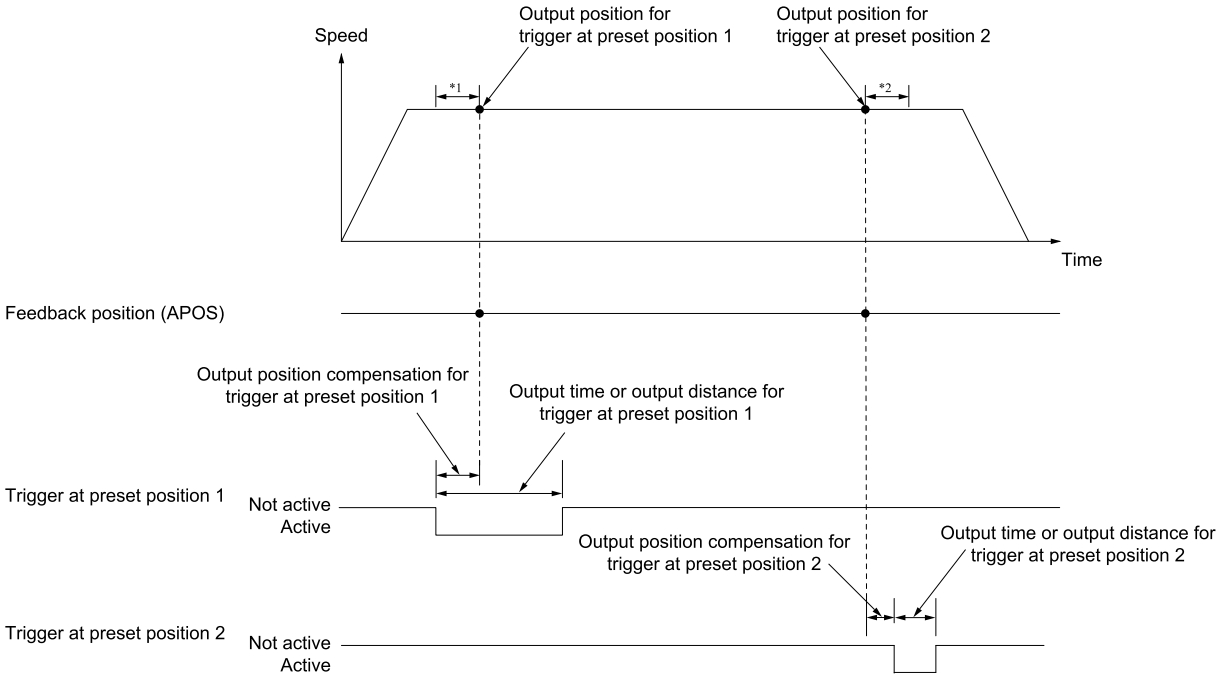

*1 For triggers at preset positions to function, the speed must be constant for at least 250 µs before the machine passes a preset position.
*2 When you set the output width of a signal output at a preset position as a distance, use a distance that does not exceed the point where deceleration of the constant speed starts.

> **Important**
> When using an incremental encoder, this function is enabled after an origin return is executed from the host controller.
> When using an absolute encoder, this function is always enabled.

You can use both high-speed outputs that output signals from line drivers and normal outputs that output signals from photocouplers for triggers at preset positions. They can also be used together.

Output circuit specifications for the line-driver and photocoupler output are given below.

(1) Line-Driver Output Specifications

Compared with a photocoupler, a line driver is capable of more precise output, and it is suitable for applications with no margin for output signal delays or variations.

Item	Specification
Number of Output Position Settings	32
Range of Output Position Settings	-2147483648 to 2147483647 reference units
Outputs for Triggers at Preset Positions	Triggers at preset positions are allocated to output signals /PAO, /PBO, and /PCO on CN1.
Output Time Setting Range	0 to 32767000 µs
Output Distance Setting Range	0 to 2147483647 reference units
Output Position Compensation Range	-2147483648 to 2147483647 reference units

Continued on next page.

Continued from previous page.

Item	Specification
Signal Output Delay Time	ON to OFF: 1 μs or less, OFF to ON: 1 μs or less
Signal Output Variation	At constant speed of 1000000 [reference unit/sec] or greater: 5 μs max. *1, *2

*1 The accuracy of high-speed output signals for triggers at preset positions is reduced during acceleration, deceleration, and low-speed operation.
*2 This value is when a Σ-X-series rotary servomotor is connected.

(2) Photocoupler Output Specifications

Item	Specification
Number of Output Position Settings	32
Range of Output Position Settings	-2147483648 to 2147483647 reference units
Outputs for Triggers at Preset Positions	Triggers at preset positions are allocated to output signals /SO1, /SO2, and /SO3 on CN1.
Output Time Setting Range	0 to 32767000 μs
Output Distance Setting Range	0 to 2147483647 reference units
Output Position Compensation Range	-2147483648 to 2147483647 reference units
Signal Output Delay Time	ON to OFF: 2 ms or less, OFF to ON: 1 ms or less
Signal Output Variation	250 μs max.

(3) Restrictions

The following restrictions apply to triggers at preset positions when using the rotational coordinate system.

- Set the output position setting to a value in the range of coordinates (in the range of the settings of Min Position Range Limit (607Bh:01) and Max Position Range Limit (607Bh:02)).
- Set the output distance setting to a value less than half the range of coordinates (the range of the settings of Min Position Range Limit (607Bh:01) and Max Position Range Limit (607Bh:02)).

6.15.2 I/O Signal Connector (CN1) Pin Layout

The following figure gives the pin layout of the I/O signal connector (CN1) when using triggers at preset positions.

For the high-speed outputs for triggers at preset positions, allocate and wire High-Speed Output Signal for Triggers at Preset Positions 1 to 3 to CN1-17 to CN1-22.

For the normal outputs for triggers at preset positions, allocate and wire Normal Output Signal for Triggers at Preset Positions 1 to 3 to CN1-1, CN1-2, or CN1-23 to CN1-26.

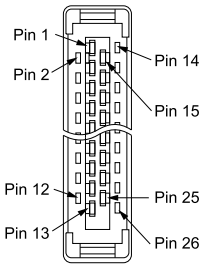

The illustration to the left and the following table are from the direction of the following arrow without the connector shell attached.

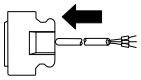

2	/SO1- (/BK-) *1	Normal Output for Triggers at Preset Positions 1 (Brake Output)	1	/SO1+ (/BK+) *1	Normal Output for Triggers at Preset Positions 1 (Brake Output)	15	BAT-	Battery for Absolute Encoder (-)	14	BAT+	Battery for Absolute Encoder (+)
4	ALM-	Servo Alarm Output	3	ALM+	Servo Alarm Output	17	PAO *2 (HSO1)	High-Speed Output for Triggers at Preset Positions 1	16	SG	Signal Ground
6	+24VIN	Sequence Input Signal Power Supply Input	5	TH	Overheat Protection Input	19	PBO *2 (HSO2)	High-Speed Output for Triggers at Preset Positions 2	18	/PAO *2 (/HSO1)	High-Speed Output for Triggers at Preset Positions 1
8	/SI2 (N-OT)	General-Purpose Sequence Input 2	7	/SI1 (P-OT)	General-Purpose Sequence Input 1	21	PCO *2 (HSO3)	High-Speed Output for Triggers at Preset Positions 3	20	/PBO *2 (/HSO2)	High-Speed Output for Triggers at Preset Positions 2
10	/SI4 (/Probe1)	General-Purpose Sequence Input 4	9	/SI3	General-Purpose Sequence Input 3	23	/SO2+ *1	Normal Output for Triggers at Preset Positions 2	22	/PCO *2 (/HSO3)	High-Speed Output for Triggers at Preset Positions 3
12	/SI6 (/Home)	General-Purpose Sequence Input 6	11	/SI5 (/Probe2)	General-Purpose Sequence Input 5	25	/SO3+ *1	Normal Output for Triggers at Preset Positions 3	24	/SO2- *1	Normal Output for Triggers at Preset Positions 2
–	–	–	13	/SI0	General-Purpose Sequence Input 0	–	–	–	26	/SO3- *1	Normal Output for Triggers at Preset Positions 3

*1 When Pn660 is set to n.1□□□ (enable triggers at preset positions), the normal outputs for triggers at preset positions are used. The output signals for triggers at preset positions are output using logical OR. This allows other output signals to also be allocated to the same terminals.

*2 When Pn660 is set to n.1□□□ (enable triggers at preset positions), the high-speed outputs for triggers at preset positions are used. Encoder divided pulses are not output.

6.15.3 Procedure to Use Triggers at Preset Positions

The following table gives the steps to use triggers at preset positions.

Step		Item	Reference
1		Parameter Settings	–
	1-1	Set Pn50A to n.□□□2 (use Pn590 to Pn5BC (Sigma-LINK II input signal allocation mode)). **Note:** If Pn50A is not set to n.□□□2, A.042 (Parameter Combination Error) will occur.	☞ *(c) Input Signal Allocation Mode Setting on page 292*
	1-2	Set Pn590 to Pn5BC (SigmaLINK II input signal allocation mode).	☞ *17.1.2 List of Parameters on page 755*
	1-3	Set the signal polarity with Pn5D7 (Output Signal Inversion for Triggers at Preset Positions). Information: You can use the EtherCAT object Controlword_VenderS (2776h) to forcibly stop the triggers at preset positions output signals. This allows triggers at preset positions to be paused when necessary, such as during an origin return operation. Refer to the following section for details on the settings. ☞ *15.5.14 Controlword_VenderS (2776h) on page 658*	☞ *(e) Inverse Settings for Output Signals for Triggers at Preset Positions on page 293*
	1-4	Set Pn660 = n.□□□X (Output Unit Setting).	☞ *(b) Output Unit Setting on page 292*
	1-5	Set Pn660 to n.1□□□ (enable triggers at preset positions).	☞ *(a) Triggers at Preset Positions Function Selection on page 292*

Continued on next page.

Continued from previous page.

Step		Item	Reference
2		Turn the power to the SERVOPACK OFF and ON again.	–
3		Edit the triggers at preset positions table in the SigmaWin+. Information You can also use an EtherCAT object to configure the triggers at preset positions table. *1	☞ *(2) Configuring the Triggers at Preset Positions Table on page 293* ☞ *(3) Details on the Triggers at Preset Positions Table on page 295*
	3-1	Set the output position in reference units.	
	3-2	Set the axis number, output terminal selection, passing direction selection, and encoder selection with the output function selection.	
	3-3	If Pn660 is set to n.□□□0, set the signal output width in the output distance of the triggers at preset positions table as a time in µs.	
	3-4	If Pn660 is set to n.□□□1, set the signal output width in the output time of the triggers at preset positions table as a distance in reference units.	
	3-5	Set the output position compensation as a distance in reference units.	
	3-6	Save the triggers at preset positions table to flash memory.	
4		Operate the servomotor from the host controller. When the moving part of the machine passes a preset position, a trigger at preset position signal will be output.	–

*1 Refer to the following sections for details on settings configured by using objects.
☞ *15.5.15 Output Position Setting (2778h) on page 659*
☞ *15.5.16 Output Function Setting (2779h) on page 659*
☞ *15.5.17 Output Time Setting (277Ah) on page 659*
☞ *15.5.18 Output Distance Setting (277Bh) on page 659*
☞ *15.5.19 Output Position Correction Setting (277Ch) on page 659*
Refer to the following section for the procedure to save the settings.
☞ *(a) Example Settings for Triggers at Preset Positions on page 651*

(1) Parameter Settings

(a) Triggers at Preset Positions Function Selection

Select the triggers at preset positions function with Pn660 = n.X□□□ (Triggers at Preset Positions Selections).

		Triggers at Preset Positions Selections Speed Pos Trq		When Enabled
Pn660 (2660h)	n.X□□□	0 Default	Disable triggers at preset positions.	After restart
		1	Enable triggers at preset positions.	
		2	Reserved (Do not use.)	

(b) Output Unit Setting

Set the output width of the preset position output signals to time [µs] or distance [reference units] with Pn660 = n.□□□X (Output Unit Setting).

		Output Unit Setting Speed Pos Trq		When Enabled
Pn660 (2660h)	n.□□□X	0 Default	Set the signal output width as a time [µs].	After restart
		1	Set the signal output width as a distance [reference units].	

(c) Input Signal Allocation Mode Setting

Set the input signal allocation mode to Pn50A = n.□□□2 (use Pn590 to Pn5BC (Sigma-LINK II input signal allocation mode)).

Note:

If Pn50A is not set to n.□□□2, A.042 (Parameter Combination Error) will occur.

		Input Signal Allocation Mode Speed Pos Trq		When Enabled
Pn50A (250Ah)	n.□□□X	0	Reserved (Do not use.)	After restart
		1 Default	Use Pn50A to Pn516 (Sigma-7S-compatible I/O signal allocation mode).	
		2	Use Pn590 to Pn5BC (SigmaLINK II input signal allocation mode).	

(d) Signal Allocations

Set the signal allocations with Pn590 to Pn5BC (SigmaLINK II input signal allocation mode).

Refer to the following sections for details on the parameters.

☞ *17.1.2 List of Parameters on page 755*

(e) Inverse Settings for Output Signals for Triggers at Preset Positions

The output signals for triggers at preset positions can be inverted with Pn5D7 (Output Signal Inversion for Triggers at Preset Positions).

		High-Speed Output Signal Inverse Settings for Triggers at Preset Positions Speed Pos Trq		When Enabled
Pn5D7 (25D7h)	n.□□□X	0 Default	The signal is not inverted.	After restart
		1	Invert CN1-17, -18 (PAO) and output it.	
		2	Invert CN1-19, -20 (PBO) and output it.	
		3	Invert CN1-17, -18 (PAO) and CN1-19, -20 (PBO) and output them.	
		4	Invert CN1-21, -22 (PCO) and output it.	
		5	Invert CN1-17, -18 (PAO) and CN1-21, -22 (PCO) and output them.	
		6	Invert CN1-19, -20 (PBO) and CN1-21, -22 (PCO) and output them.	
		7	Invert CN1-17, -18 (PAO), CN1-19, -20 (PBO), and CN1-21, -22 (PCO) and output them.	
		Normal Output Signal Inverse Settings for Triggers at Preset Positions 1 Speed Pos Trq		**When Enabled**
Pn5D7 (25D7h)	n.□□X□	0 Default	The signal is not inverted.	After restart
		1	Invert CN1-1, -2 (SO1) and output it.	
		2	Invert CN1-23, -24 (SO2) and output it.	
		3	Invert CN1-1, -2 (SO1) and CN1-23, -24 (SO2) and output them.	
		4	Invert CN1-25, -26 (SO3) and output it.	
		5	Invert CN1-1, -2 (SO1) and CN1-25, -26 (SO3) and output them.	
		6	Invert CN1-23, -24 (SO2) and CN1-25, -26 (SO3) and output them.	
		7	Invert CN1-1, -2 (SO1), CN1-23, -24 (SO2), and CN1-25, -26 (SO3) and output them.	

Note:

The output signals for triggers at preset positions are output using OR circuits. This allows other signals set with Pn5B0 to Pn5BC to be allocated to SO1 to SO3. Be careful when setting the output signals.

(2) Configuring the Triggers at Preset Positions Table

This section provides the procedure to configure the triggers at preset positions table from the SigmaWin+.

The flow of operation from making settings for triggers at preset positions through writing data to the SERVOPACK is described. Refer to the following manual for details on editing tables on the SigmaWin+.

📖 Engineering Tool SigmaWin+ Operation Manual (Manual No.: SIET S800001 34)

Information

You can also use an EtherCAT object to configure the triggers at preset positions table. Refer to the following sections for details on settings configured by using objects.

☞ *15.5.15 Output Position Setting (2778h) on page 659*
☞ *15.5.16 Output Function Setting (2779h) on page 659*
☞ *15.5.17 Output Time Setting (277Ah) on page 659*
☞ *15.5.18 Output Distance Setting (277Bh) on page 659*
☞ *15.5.19 Output Position Correction Setting (277Ch) on page 659*

Refer to the following section for the procedure to save the settings.

☞ *(a) Example Settings for Triggers at Preset Positions on page 651*

1. **Click the [ ] button for the servo drive in the workspace of the Main Window of the SigmaWin+.**
2. **Select [Set Triggers at Preset Positions] in [Table Program].**

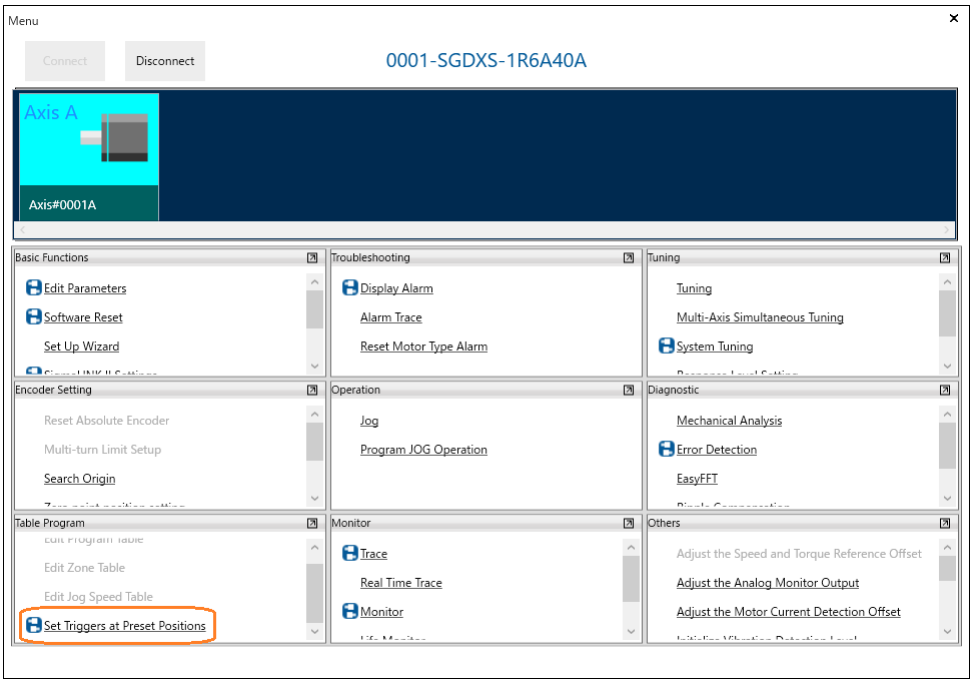

The [Set Triggers at Preset Positions] dialog box will be displayed.

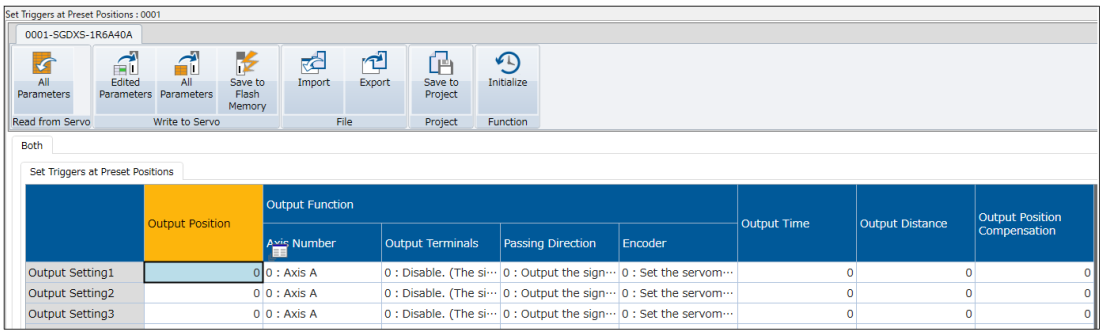

3. **Set the items for the Output Setting 1 to 32 to use.**

   Refer to the following section for details on the settings.

   ☞ *(3) Details on the Triggers at Preset Positions Table on page 295*

4. **After the settings are completed, click the [All Parameters] button.**

   The edited data will be written to the volatile memory in the SERVOPACK.

5. **Click the [Save to Flash Memory] button.**

   The edited data will be written to the non-volatile memory in the SERVOPACK.

Note:

When you write edited data to the SERVOPACK, you must save it to flash memory. If the data is not saved to flash memory, the edited data will be erased from memory when the power to the SERVOPACK is turned OFF.

This concludes the procedure to configure the triggers at preset positions table.

(3) Details on the Triggers at Preset Positions Table

> **Important**
> The polarity of the output signals for triggers at preset positions can be inverted with Pn5D7 (Output Signal Inversion for Triggers at Preset Positions). Check the settings of Pn5D7 when allocating the output signals for triggers at preset positions.

The details of the triggers at preset positions table are shown below.

	(a)	(b)	(c)	(d)	(e)
Name	**Output Position**	**Output Function**	**Output Time**	**Output Distance**	**Output Position Compensation**
Output Setting 1					
Output Setting 2					
Output Setting 3					
:					
Output Setting 32					

(a) Output Position

Set the reference position for outputting a signal for the trigger at the preset position.

Size	Setting Range	Setting Unit	Default Setting	When Enabled	Classification
4	-2147483648 to 2147483647	Reference unit *1	0	Immediately	Setup

*1 When an external encoder is selected in the output function (third digit), the setting unit is the external encoder resolution.

(b) Output Function

Select the axis number, output terminals, signal logic, and passing direction to use for the trigger at the preset position.

Size	Setting Range	Setting Unit	Default Setting	When Enabled	Classification
4	00000000h to 000112A2h	Reference unit	00000000h	*1	Setup

*1 The passing direction (second digit) is enabled immediately after it is changed. The other digits are enabled after the power is turned OFF and ON again or after the parameters are recalculated.

Digit	Name	Setting	Description
0	Axis No.	0	Set the axis number to 0.
1	Output Terminal Selection	0	Disable. (The signal is not output.)
		1	Output HSO1 (High-Speed Output Signal for Triggers at Preset Positions 1) signal from the PAO terminal.
		2	Output HSO2 (High-Speed Output Signal for Triggers at Preset Positions 2) signal from the PBO terminal.
		3	Output HSO3 (High-Speed Output Signal for Triggers at Preset Positions 3) signal from the PCO terminal.
		4	Output /NSO1 (Normal Output Signal for Triggers at Preset Positions 1) signal from the /SO1 terminal.
		5	Output /NSO2 (Normal Output Signal for Triggers at Preset Positions 2) signal from the /SO2 terminal.
		6	Output /NSO3 (Normal Output Signal for Triggers at Preset Positions 3) signal from the /SO3 terminal.
		7 to F	Disable. (The signal is not output.)

Continued on next page.

Continued from previous page.

Digit	Name	Setting	Description
2	Passing Direction Selection	0	Output the signal at the preset position during forward movement.
		1	Output the signal at the preset position during reverse movement.
		2	Output the signal at the preset position during forward or reverse movement.
3	Encoder Selection	0 *1	Set the servomotor encoder position as the reference.
		1	Set the external encoder monitor position as the reference.
4 to 7	Reserved (Do not change.)		

*1 When Pn002 is set to n.1□□□ (the external encoder moves in the forward direction for CCW motor rotation) or n.3□□□ (the external encoder moves in the reverse direction for CCW motor rotation), the signal can be output at the position of the fully-closed encoder by setting the encoder selection value to 0.

(c) Output Time

Set the output time of the preset position signal output. This is valid when Pn660 is set to n.□□□0 (set the signal output width as a time [μs]).

Size	Setting Range	Setting Unit	Default Setting	When Enabled	Classification
4	0 to 32767000	1 μs	0	Immediately	Setup

(d) Output Distance

Set the output width of the output signals for triggers at preset positions as distance. This is valid when Pn660 is set to n.□□□1 (set the signal output width as a distance [reference units]).

Size	Setting Range	Setting Unit	Default Setting	When Enabled	Classification
4	0 to 2147483647	Reference unit	0	Immediately	Setup

(e) Output Position Compensation

Set the compensation distance in reference units from the reference position set in the output position setting.

Size	Setting Range	Setting Unit	Default Setting	When Enabled	Classification
4	-2147483648 to 2147483647	Reference unit	0	Immediately	Setup

6.16 Rotational Coordinate System

6.16.1 Outline

You can set the range of the rotational coordinate system for position data ((Position Demand Value (6062h) and Position Actual Value (6064h)) with Position Range Limit (607Bh).

The coordinates will be in the range that is set with Min Position Range Limit (607Bh:01) and Max Position Range Limit (607Bh:02).

This function is enabled after the power is turned OFF and ON again or after User Parameter Configuration (2700h) is executed from the host controller.

The following figure illustrates the operation of the rotational coordinate system.

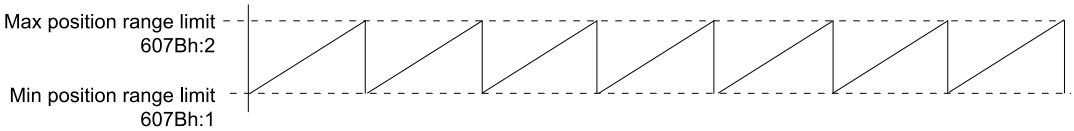

> **Important**
> - Confirm that the system (e.g., host controller) supports the rotational coordinate system over EtherCAT communications. There is a risk of unexpected operation if the system does not support the rotational coordinate system.
> - The rotational coordinate system is enabled when Min Position Range Limit (607Bh:1) or Max Position Range Limit (607Bh:2) is not set to 0.

The following figure gives an example of operation when the range of the rotational coordinates for the system is 360° (1 rotation).

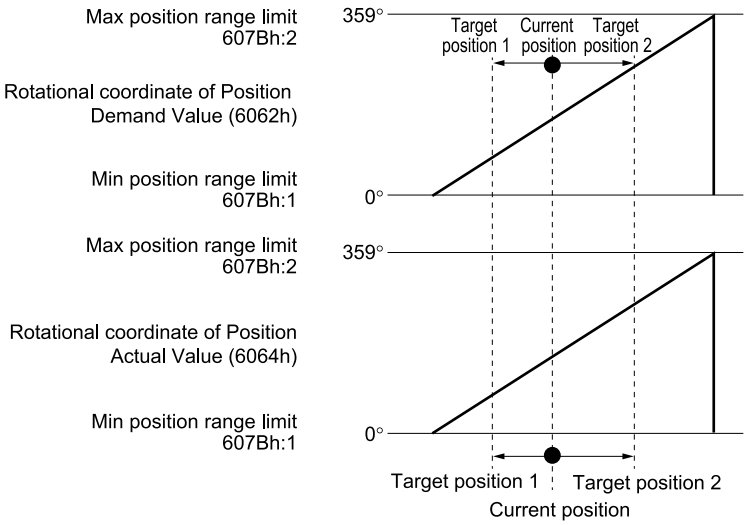

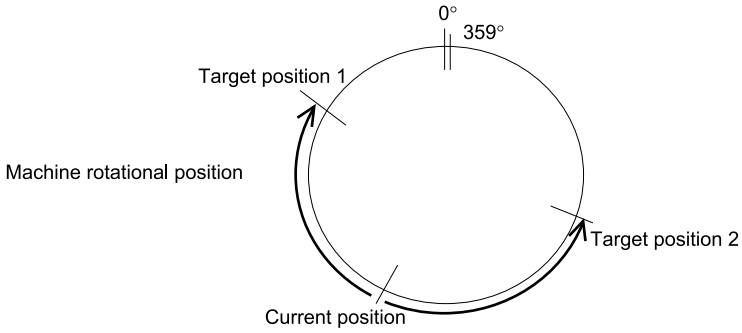

6.16.2 Block Diagrams

The following figure shows the block diagram when the rotational coordinate system is enabled.

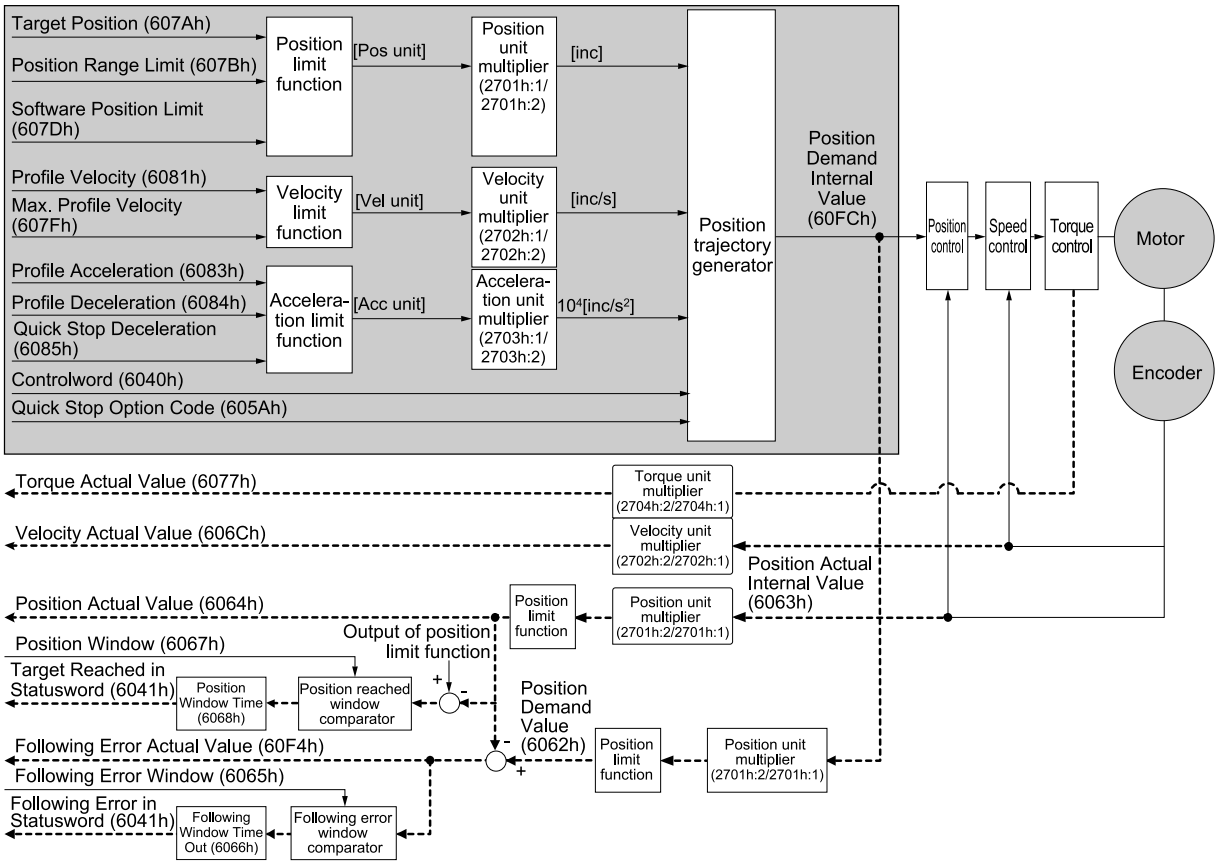

6.16.3 Supported Modes of Operation When the Rotational Coordinate System Is Enabled

Modes of Operation	Reference	Monitoring
Profile Position Mode	Supported.	Supported.
Interpolated Position Mode	Supported.	Supported.
Cyclic Synchronous Position Mode	Supported.	Supported.
Homing	Supported.	Supported.
Profile Velocity Mode	Not supported.	Supported.
Cyclic Syncronous Velocity Mode	Not supported.	Supported.
Profile Torque Mode	Not supported.	Supported.
Cyclic Sync Torque Mode	Not supported.	Supported.

6.16.4 Setup Procedure

The following table gives the procedure for making settings for the rotational coordinate system.

- When Using an Absolute Encoder

Step	Description
1	Set the first rotational coordinate in Min Position Range Limit (607Bh:1) and the last rotational coordinate in Max Position Range Limit (607Bh:2).
2	Set the multiturn limit to match the machine rotational coordinate system. Refer to the following section for details. ☞ *(2) Setting the Multiturn Limit on page 299*
3	Set the absolute encoder origin offset in Home Offset (607Ch). Refer to the following section for details. ☞ *5.16.1 Absolute Encoder Origin Offset on page 220*
4	Turn the SERVOPACK power OFF and ON again or execute User Parameter Configuration (2700h) from the host controller. *1
5	Set Position Option Code (60F2h).
6	Start operation.

- When Using an Incremental Encoder

Step	Description
1	Set the first rotational coordinate in Min Position Range Limit (607Bh:1) and the last rotational coordinate in Max Position Range Limit (607Bh:2).
2	Turn the SERVOPACK power OFF and ON again or execute User Parameter Configuration (2700h) from the host controller. *1
3	Execute an origin return.
4	Set Position Option Code (60F2h).
5	Start operation.

*1 Even if you set User Parameter Configuration (2700h), Min Position Range Limit (607Bh:1), Max Position Range Limit (607Bh:2), and Home Offset (607Ch) will not be saved in non-volatile memory. Refer to the following section for details on saving to non-volatile memory.
☞ *15.2.5 Store Parameters (1010h) on page 631*

(1) Setting the Rotational Coordinate System

Set the first and last rotational coordinates with the following object.

Index	Subindex	Name	Data Type	Access	PDO Mapping	Value	Saving to EEPROM
607Bh	0	Number of entries	USINT	RO	No	2	No
	1	Min position range limit	DINT	RW	Yes	-2147483648 to 0 (default: 0) [Pos. unit]	Yes
	2	Max position range limit	DINT	RW	Yes	0 to 2147483647 (default: 0) [Pos. unit]	Yes

Note:

To enable the object, turn the power OFF and ON again or execute User Parameter Configuration (2700h) from the host controller.

Important

- 607Bh: 01 and 607Bh: 02 are set to 0, operation will be performed with linear coordinates (-2147483648 to 2147483647).
- In Reverse Rotation Mode (Pn000 = n.□□□1), the motor will operate in the reverse direction, but 607Bh:01 and 607Bh:02 are set to the same direction as the reference direction.
- When the rotational coordinate system is enabled (Min Position Range Limit (607Bh:1) or Max Position Range Limit (607Bh:2) is not set to 0), Software Position Limit (607Dh) is disabled.
- When the rotational coordinate system is enabled (Min Position Range Limit (607Bh:1) or Max Position Range Limit (607Bh:2) is not set to 0), the Touch Probe 1 Positive Edge (60BAh) and Touch Probe 2 Positive Edge (60BCh) latch positions by touch probe are output after being converted to rotational coordinates.

(2) Setting the Multiturn Limit

When you use an absolute encoder, set the multiturn limit to match the rotational coordinate system that is used by the system.

When using a rotational coordinate system, be sure to set the multiturn limit based on the following example.

Refer to the following section for details on the setting the multiturn limit.

☞ 6.8.7 Multiturn Limit Setting on page 265

Pn205 (2205h)	Multiturn Limit			Speed Pos Trq
	Setting Range	Setting Unit	Default Setting	When Enabled
	0 to 65535	1 rev	65535	After restart

Note:

To enable the multiturn limit, turn the power OFF and ON again or execute User Parameter Configuration (2700h) from the host controller.

<Setting Example for the Multiturn Limit (Pn205)>

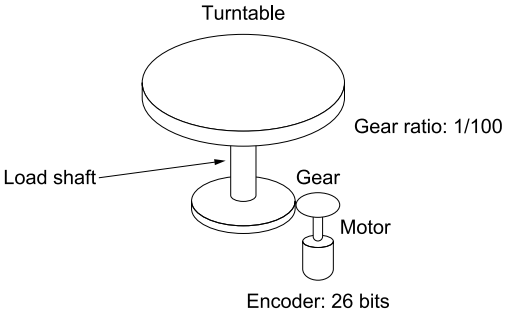

Conditions

A turntable is controlled with rotational coordinates where one revolution equals 360°, which is equal to 36000 reference units.

Max position range limit (607Bh:2): 0

Min position range limit (607Bh:1): 35999

Gear ratio: 1/100

The electronic gear ratio is as follows:

$$\frac{B}{A} = \frac{\text{Numerator}}{\text{Denominator}} = \frac{\text{Encoder resolution}}{\text{Travel amount per load shaft rotation (reference unit)}} \times \frac{m}{n}$$

$$= \frac{67108864}{360000} \times \frac{100}{1} = \frac{67108864}{3600}$$

With this gear ratio, the motor will turn 100 times for 1 revolution of the turntable. The Multiturn Limit (Pn205) is therefore 99 (100 − 1 = 99).

Note:

For the settings related to the electronic gear, use objects 2701h to 2704h. Refer to the following section for details.

☞ 15.5 Manufacturer Specific Objects on page 647

Important

If the multiturn limit is not set to match the machine rotational coordinate system, the position may become offset.

(3) Setting the Moving Method of the Rotational Coordinate System

Set the movement in rotational coordinates with Position Option Code (60F2h).

Index	Subindex	Name	Data Type	Access	PDO Mapping	Value	Saving to EEPROM
60F2h	0	Position option code	UINT	RW	Yes	0 to 0xFFFF (default: 0)	No

(a) Data Description

Bit	Value	Name	Description
0 to 5	0	–	Reserved.
6, 7	0	Normal (similar to linear axis)	Simple absolute position positioning
	1	Only negative direction	Positioning in the reverse direction
	2	Only negative direction	Positioning in the forward direction
	3	Optimized (shortest way)	Positioning in the shortest direction
8 to 15	0	–	Reserved.

(b) Example 1 (Target Position Is Inside the Rotational Coordinate System)

These examples show the operation when positioning is performed between 50° and 330° and between 150° and 210° in a rotational coordinate system from 0° to 359°.

In the following examples, there is no difference in the operation whether the target position is an absolute value or relative position.

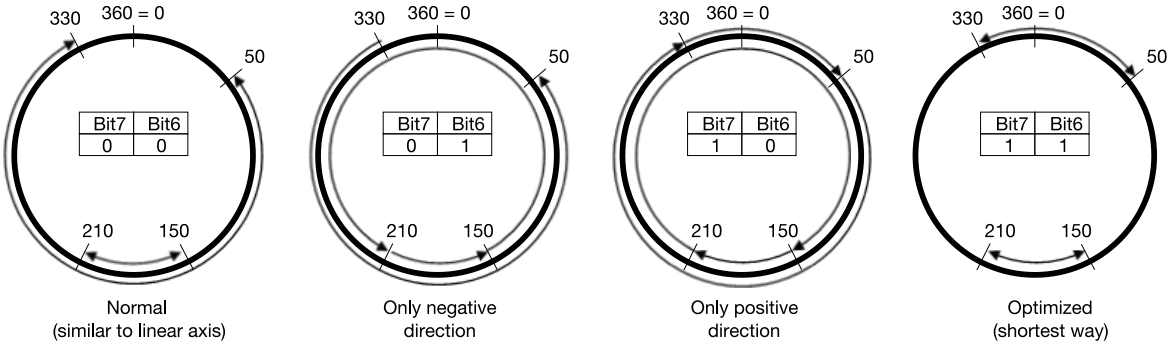

(c) Example 2 (Target Position Is Outside the Rotational Coordinate System)

These examples show the operation when positioning is performed from 50° to 690° in a rotational coordinate system from 0° to 359°. For operations other than absolute position positioning, the target position will be converted to the relevant position inside the rotational coordinate system (operation within one rotation).

In the following examples, there is no difference in the operation whether the target position is an absolute value or relative position.

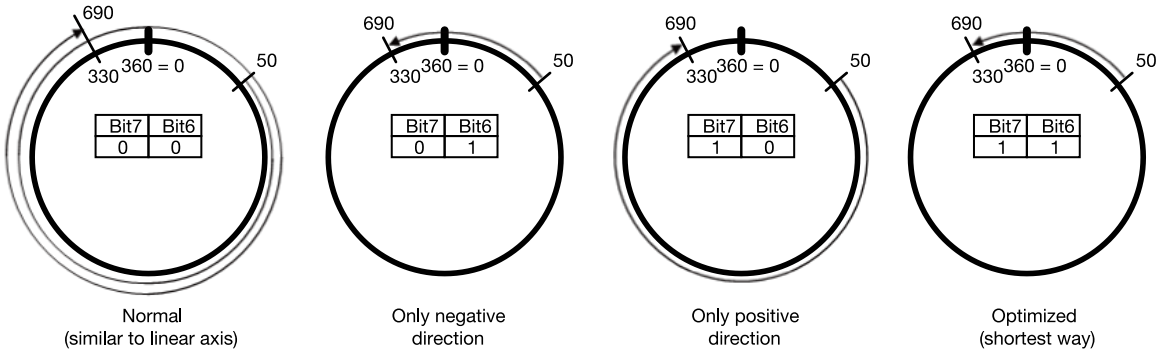

Important

- If you use the rotational coordinate system in an interpolation feed command (e.g., interpolated position mode or cyclic sync position mode), specify a position between the first and last rotational coordinates as the target position.
- Use this function after setting the position deviation overflow alarm level provided as a protective function to an appropriate value for the system.

6.17 Specifying Output Status When a Host Communications Error Occurs

The function to specify the output status when a host communications error occurs allows the status of the general-purpose output signals *1 on the CN1 connector of the SERVOPACK to be selected when the EtherCAT state machine (state transitions for EtherCAT communications startup and communications between master and slave applications during operation) is a state other than OPERATION (communications possible).

With EtherCat communications, you can control the general-purpose output signals on the CN1 connector of the SERVOPACK from the host controller. However, when an EtherCAT communications error occurs, such as a disconnected communications cable, the host controller loses the ability to control the signals and the SERVOPACK will no longer receive the references correctly.

Use this function to select the status of the outputs when references are no longer received from the host controller.

*1 Applicable signals: SO1 to SO3 (CN1-1, -2, and -23 to -26)
The above signals are photocoupler output circuits that are opened with OFF and closed with ON. Refer to the following section for details.
☞ *(a) Photocoupler Output Circuits on page 158*

6.17.1 Function Selections for Specifying Output Status When a Host Communications Error Occurs

Select whether to use the function to specify the output status when a host communications error occurs in Pn55C (Specifying Output Status At a Host Comms Error Switch).

Select the output statuses in Pn55D (Specifying Output Status When a Host Comms Error Occurs) for when the function is enabled.

		Specifying Output Status When a Host Communications Error Occurs Function Selection Speed Pos Trq		When Enabled
Pn55C (255Ch)	n.□□□X	0	Disable the function to specify the output status when a host communications error occurs.	After restart
		1 Default	Enable the function to specify the output status when a host communications error occurs.	

	Specifying Output Status When a Host Comms Error Occurs Speed Pos Trq			
Pn55D (255Dh)	Setting Range	Setting Unit	Default Setting	When Enabled
	0000h to 001Fh	–	0000h	After restart

Parameter		Meaning
Pn55D (255Dh)	Bit 0	Use the SO1 output (0: OFF when a host communications error occurs, 1: ON when a host communications occurs)
Pn55D (255Dh)	Bit 1	Use the SO2 output (0: OFF when a host communications error occurs, 1: ON when a host communications occurs)
Pn55D (255Dh)	Bit 2	Use the SO3 output (0: OFF when a host communications error occurs, 1: ON when a host communications occurs)
Pn55D (255Dh)	Bits 3 to 15	Reserved (Do not use.)

6.17.2 Precautions

- If signals are allocated to SO1 to SO3 (= Pn50E, Pn50F, Pn510 (Output Signal Selections 1 to 3), the signals will be output by using the logical OR of the statuses of those signals and the selection statuses of this function.

- When the host controller is connected and the EtherCAT state machine is OPERATIONAL, the signals will be output according to the host controller commands. In all other cases, the signals will be output according to the settings of this function. This function cannot be used when the control power is shut OFF. Configure the circuits to be on the safe side when the control power is shut OFF.

6.18 Soft Start Settings

The soft start function takes a stepwise speed reference input and applies the specified acceleration/ deceleration rates to convert it to a trapezoidal speed reference.

You specify the acceleration/deceleration rates in Pn305 (Soft Start Acceleration Time) and Pn306 (Soft Start Deceleration Time).

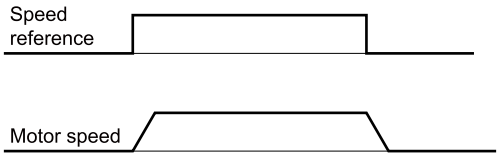

Use this function to perform smoother speed control (including internal set speed control).

Pn305 (2305h)	Soft Start Acceleration Time			Speed Pos Trq
	Setting Range	Setting Unit	Default Setting	When Enabled
	0 to 12000	1 ms	0	Immediately
Pn306 (2306h)	Soft Start Deceleration Time			Speed Pos Trq
	Setting Range	Setting Unit	Default Setting	When Enabled
	0 to 12000	1 ms	0	Immediately

Pn305: The time required for the servomotor to accelerate from a stopped state to the maximum motor speed.

Pn306: The time required for the servomotor to decelerate from the maximum motor speed to a stopped state.

You can calculate the actual acceleration/deceleration times with the following formulas.

・Actual acceleration time = $\frac{\text{Target speed}}{\text{Maximum motor speed}}$ × Pn305 (Soft start acceleration time)

・Actual deceleration time = $\frac{\text{Target speed}}{\text{Maximum motor speed}}$ × Pn306 (Soft start deceleration time)

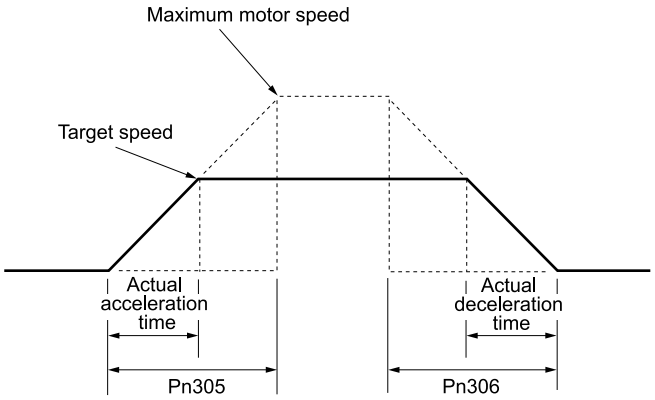

6.19 Reference Filters

6.19.1 Speed Reference Filter

The speed reference filter smooths the speed reference by applying a first order lag filter to the speed reference input.

You set the speed reference filter in Pn307 (Speed Reference Filter Time Constant).

It is normally not necessary to change this parameter. If the setting is too high, the response to the speed reference may be slowed down. Monitor the response to the speed reference as you set this parameter.

Pn307 (2307h)	Speed Reference Filter Time Constant			Speed Pos Trq
	Setting Range	Setting Unit	Default Setting	When Enabled
	0 to 65535	0.01 ms	0	Immediately

6.19.2 Average Position Reference Movement Filter

The average position reference movement filter is a function that smooths servomotor rotation by applying an average position reference movement filter to Position Demand Internal Value (60FCh). Smoothing is effective in the following cases.

- When the host controller that outputs the references cannot perform acceleration or deceleration
- When the electronic gear ratio is 10-times or higher

The following figures show the response waveforms when the average position reference movement filter is applied.

Response Waveform for Step Input	Response Waveform for Trapezoidal Reference Input
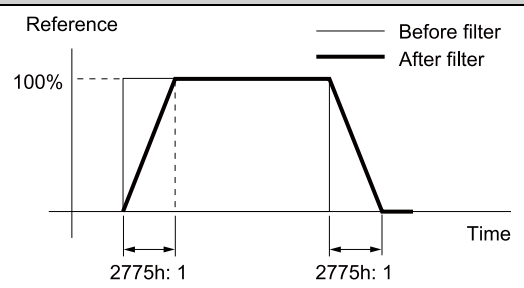	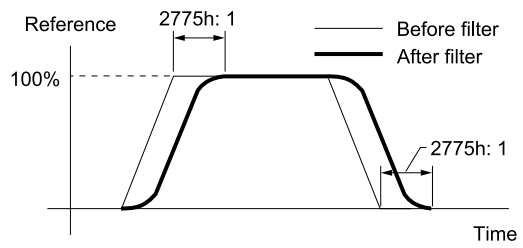

Note:

This setting does not affect the travel amount.

The object used to set the average position reference movement filter is given in the following table.

Change the settings while there is no reference input and the servomotor is stopped.

Index	Subindex	Name	Data Type	Access	PDO Mapping	Value	Saving to EEPROM
2775h	0	Number of entries	USINT	RO	No	2	No
	1	Movement Average Time	UINT	RW	No	0 to 5100 (default: 0) [0.1 ms]	Yes
	2	Reserved	UINT	RW	No	–	Yes

Information
- The filter is disabled if you set the object to 0.
- Changes to the object are not applied while the servomotor is operating. The changes will be enabled the next time the servomotor comes to a stop after reference distribution.

7

Trial Operation and Actual Operation

Provides information on the flow and procedures for trial operation and convenient functions to use during trial operation.

7.1 Flow of Trial Operation 308
7.1.1 Flow of Trial Operation for Rotary Servomotors 308
7.1.2 Flow of Trial Operation for Linear Servomotors 309

7.2 Inspections and Confirmations before Trial Operation 312

7.3 Trial Operation for the Servomotor without a Load 313
7.3.1 Preparations 313
7.3.2 Applicable Tools 314
7.3.3 Operating Procedure 314

7.4 Trial Operation with EtherCAT Communications 316

7.5 Trial Operation with the Servomotor Connected to the Machine 317
7.5.1 Precautions 317
7.5.2 Preparations 317
7.5.3 Operating Procedure 318

7.6 Convenient Function to Use during Trial Operation 319
7.6.1 Program Jogging 319
7.6.2 Origin Search 324
7.6.3 Test without a Motor 326

7.1 Flow of Trial Operation

7.1.1 Flow of Trial Operation for Rotary Servomotors

The procedure for trial operation is given below.

(1) Preparations for Trial Operation

1. **Installation**

   Install the servomotor and SERVOPACK according to the conditions.

   First, operation is checked with no load. Do not connect the servomotor to the machine.

   ☞ *3 SERVOPACK Installation on page 103*

2. **Wiring and Connections**

   Wire and connect the SERVOPACK.

   First, servomotor operation is checked without a load. Do not connect the CN1 connector on the SERVOPACK.

   ☞ *4 Wiring and Connecting SERVOPACKs on page 115*

3. **Confirmations before Trial Operation**

   ☞ *7.2 Inspections and Confirmations before Trial Operation on page 312*

4. **Power ON**

5. **Resetting the Absolute Encoder**

   This step is necessary only for a servomotor with an absolute encoder.

   ☞ *5.15 Resetting the Absolute Encoder on page 217*

(2) Trial Operation

1. **Trial Operation for the Servomotor without a Load**

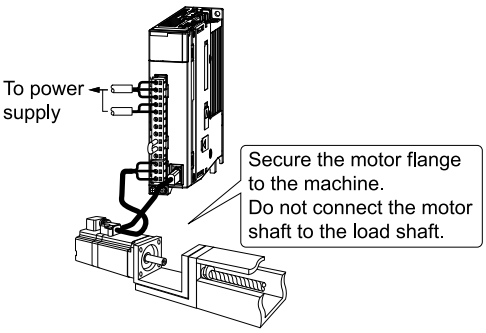

   ☞ *7.3 Trial Operation for the Servomotor without a Load on page 313*

2. **Trial Operation with EtherCAT Communications**

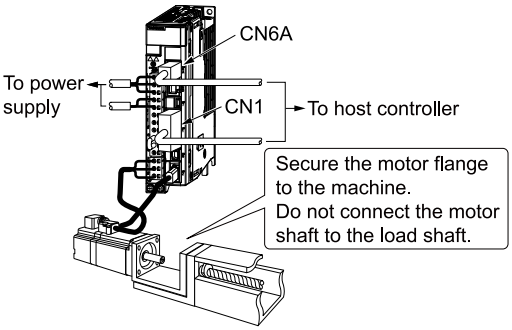

   ☞ *7.4 Trial Operation with EtherCAT Communications on page 316*

3. **Trial Operation with the Servomotor Connected to the Machine**

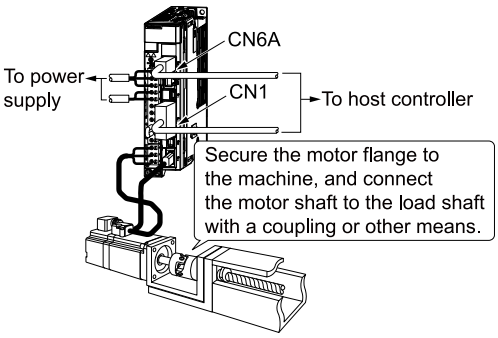

☞ *7.5 Trial Operation with the Servomotor Connected to the Machine on page 317*

7.1.2 Flow of Trial Operation for Linear Servomotors

The procedure for trial operation is given below.

(1) Preparations for Trial Operation

1. **Installation**

   Install the servomotor and SERVOPACK according to the conditions.

   First, operation is checked with no load. Do not connect the servomotor to the machine.

   ☞ *3 SERVOPACK Installation on page 103*

2. **Wiring and Connections**

   Wire and connect the SERVOPACK.

   First, servomotor operation is checked without a load. Do not connect the CN1 connector on the SERVOPACK.

   ☞ *4 Wiring and Connecting SERVOPACKs on page 115*

3. **Confirmations before Trial Operation**

   ☞ *7.2 Inspections and Confirmations before Trial Operation on page 312*

4. **Power ON**

5. **Setting Parameters in the SERVOPACK**

Step	No. of Parameter to Set	Description	Remarks	Reference
5-1	Pn282 (2282h)	Linear Encoder Scale Pitch	Set this parameter only if you are using a serial converter unit.	☞ *5.5 Setting the Linear Encoder Pitch on page 183*
5-2	–	Writing Parameters to the Linear Servomotor	Set this parameter only if you are not using a serial converter unit.	☞ *5.6 Writing Linear Servomotor Parameters on page 184*
5-3	Pn080 (2080h) = n.□□X□	Motor Phase Sequence Selection	–	☞ *5.7 Selecting the Phase Sequence for a Linear Servomotor on page 188*
5-4	Pn080 (2080h) = n.□□□X	Polarity Sensor Selection	–	☞ *5.8 Polarity Sensor Setting on page 190*

Continued on next page.

Continued from previous page.

Step	No. of Parameter to Set	Description	Remarks	Reference
5-5	–	Polarity Detection	This step is necessary only for a linear servomotor with a polarity sensor.	☞ *5.9 Polarity Detection on page 191*
5-6	• Pn50A (250Ah) = n.X□□□ and Pn50B (250Bh) = n.□□□X or • Pn590 (2590h) and Pn591 (2591h)	Overtravel Signal Allocations	–	☞ *5.1-0 Overtravel Function and Settings on page 194*
5-7	Pn483 (2483h), Pn484 (2484h)	Force Control	–	☞ *6.7.1 Internal Torque Limits on page 256*

6. **Setting the Origin of the Absolute Linear Encoder**

☞ *5.16.2 Setting the Origin of the Absolute Linear Encoder on page 220*

(2) Trial Operation

1. **Trial Operation for the Servomotor without a Load**

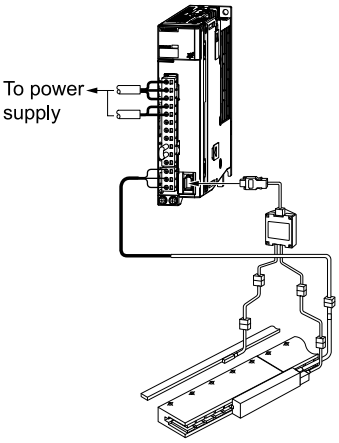

☞ *7.3 Trial Operation for the Servomotor without a Load on page 313*

2. **Trial Operation with EtherCAT Communications**

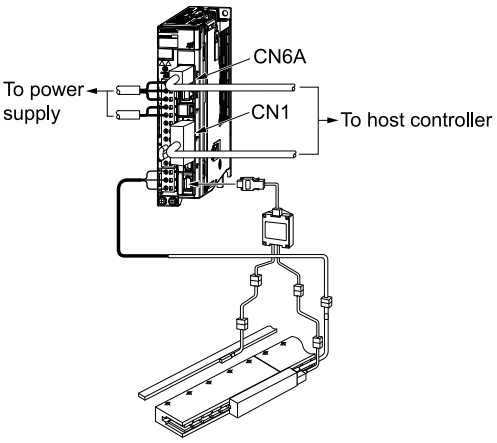

☞ *7.4 Trial Operation with EtherCAT Communications on page 316*

3. **Trial Operation with the Servomotor Connected to the Machine**

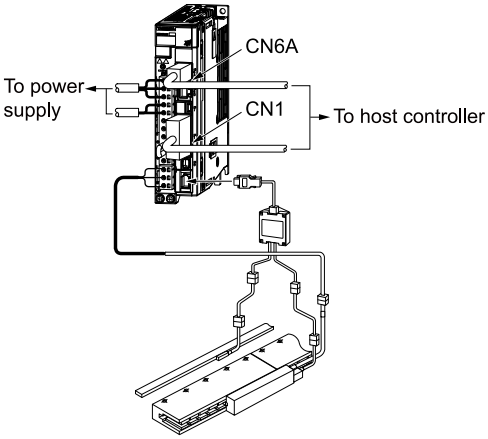

☞ *7.5 Trial Operation with the Servomotor Connected to the Machine on page 317*

7.2 Inspections and Confirmations before Trial Operation

To ensure safe and correct trial operation, check the following items before you start trial operation.

- Make sure that the SERVOPACK and servomotor are installed, wired, and connected correctly.
- Make sure that the correct power supply voltage is supplied to the SERVOPACK.
- Make sure that there are no loose parts in the servomotor mounting.
- If you are using a servomotor with an oil seal, make sure that the oil seal is not damaged. Also make sure that oil has been applied.
- If you are performing trial operation on a servomotor that has been stored for a long period of time, make sure that all servomotor inspection and maintenance procedures have been completed.
  Refer to the manual for your servomotor for servomotor maintenance and inspection information.
- If you are using a servomotor with a holding brake, make sure that the brake is released in advance. To release the brake, you must apply the specified voltage of 24 VDC to the brake.
  A circuit example for trial operation is provided below.

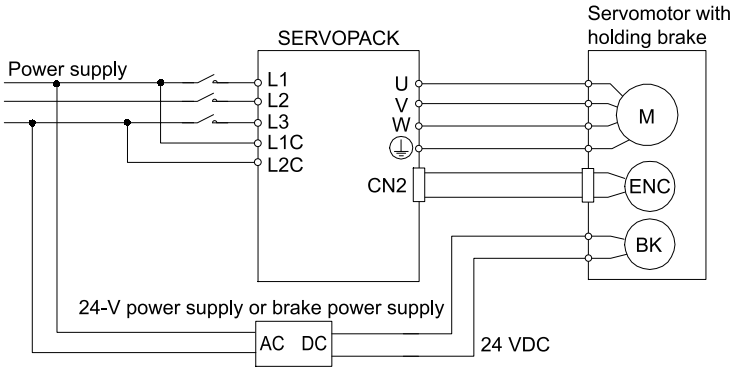

7.3 Trial Operation for the Servomotor without a Load

You use jogging operation for trial operation of the servomotor without a load.

Jogging operation is used to check the operation of the servomotor without connecting the SERVOPACK to the host controller. The servomotor is moved at the preset jogging speed.

⚠ CAUTION

During jogging operation, the overtravel function is disabled. Consider the range of motion of your machine when you jog the servomotor.

Important

The tuning-less function is enabled as the default setting. When the tuning-less function is enabled, gain will increase and vibration may occur if the servomotor is operated with no load. If vibration occurs, set Pn170 = n.□□□0 (disable the tuning-less function).

7.3.1 Preparations

Always check the following before you execute jogging.

- The parameters must not be write prohibited.
- The main circuit power must be ON.
- There must be no alarms.
- There must be no hard wire base block (HWBB).
- The servo must be OFF.
- The jogging speed must be set considering the operating range of the machine.
  The jogging speed is set with the following parameters.
  - Rotary Servomotors

Pn304 (2304h)	Jogging Speed			Speed Pos Trq
	Setting Range	Setting Unit	Default Setting	When Enabled
	0 to 10000	Rotary: 1 min^{-1} Direct Drive: 0.1 min^{-1}	500	Immediately
Pn305 (2305h)	Soft Start Acceleration Time			Speed Pos Trq
	Setting Range	Setting Unit	Default Setting	When Enabled
	0 to 12000	1 ms	0	Immediately
Pn306 (2306h)	Soft Start Deceleration Time			Speed Pos Trq
	Setting Range	Setting Unit	Default Setting	When Enabled
	0 to 12000	1 ms	0	Immediately

  - Linear Servomotors

Pn383 (2383h)	Jogging Speed			Speed Pos Trq
	Setting Range	Setting Unit	Default Setting	When Enabled
	0 to 10000	1 mm/s	50	Immediately
Pn305 (2305h)	Soft Start Acceleration Time			Speed Pos Trq
	Setting Range	Setting Unit	Default Setting	When Enabled
	0 to 12000	1 ms	0	Immediately
Pn306 (2306h)	Soft Start Deceleration Time			Speed Pos Trq
	Setting Range	Setting Unit	Default Setting	When Enabled
	0 to 12000	1 ms	0	Immediately

7.3.2 Applicable Tools

The following table lists the tools that you can use to perform jogging.

Tool	Fn No./Function Name	Reference
Digital Operator	Fn002	Σ-7/Σ-X series Digital Operator Operating Manual (Manual No.: SIEP S800001 33)
SigmaWin+	[Operation] - [Jog]	*7.3.3 Operating Procedure on page 314*

7.3.3 Operating Procedure

Use the following procedure to jog the motor.

1. **Click the [ ] button for the servo drive in the workspace of the Main Window of the SigmaWin+.**
2. **Click [Jog] in the [Menu] window.**
   The [Jog Operation] window will be displayed.
3. **Read the warnings and then click the [OK] button.**

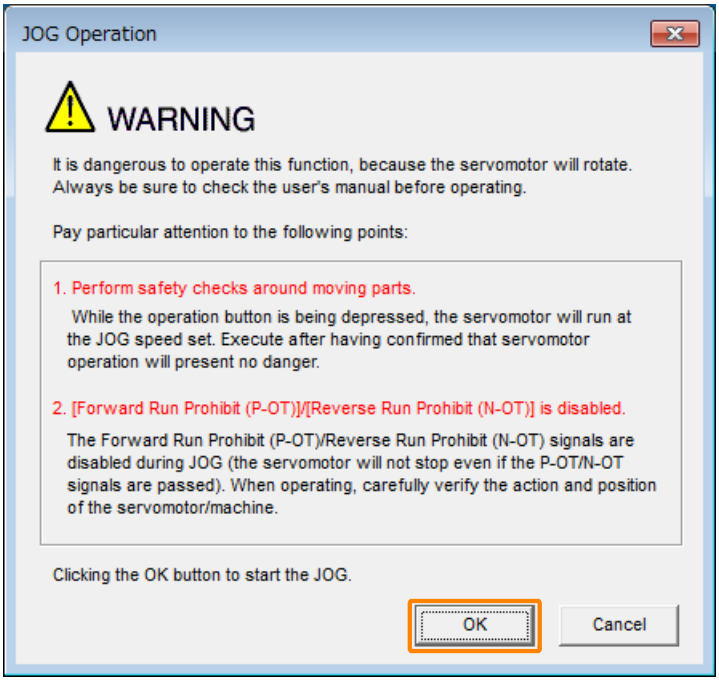

4. **Check the jogging speed and then click the [Servo ON] button.**

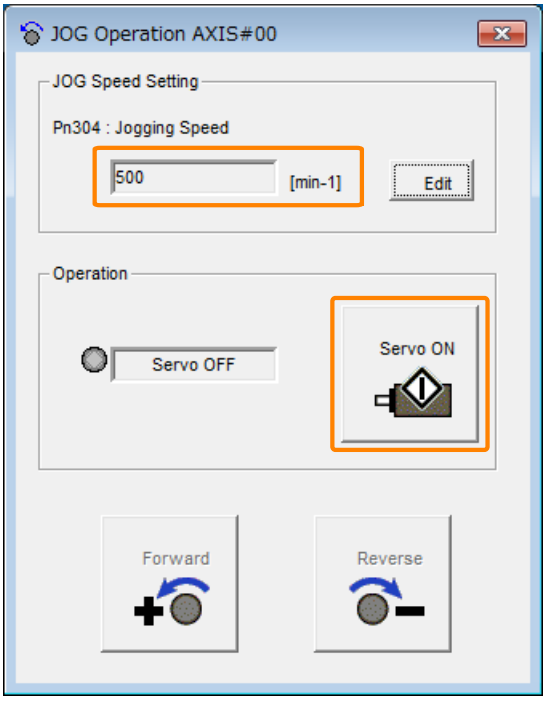

The display in the [Operation] area will change to [Servo ON].

Information To change the speed, click the [Edit] button and enter the new speed.

5. **Click the [Forward] button or the [Reverse] button.**

Jogging will be performed only while you hold down the mouse button.

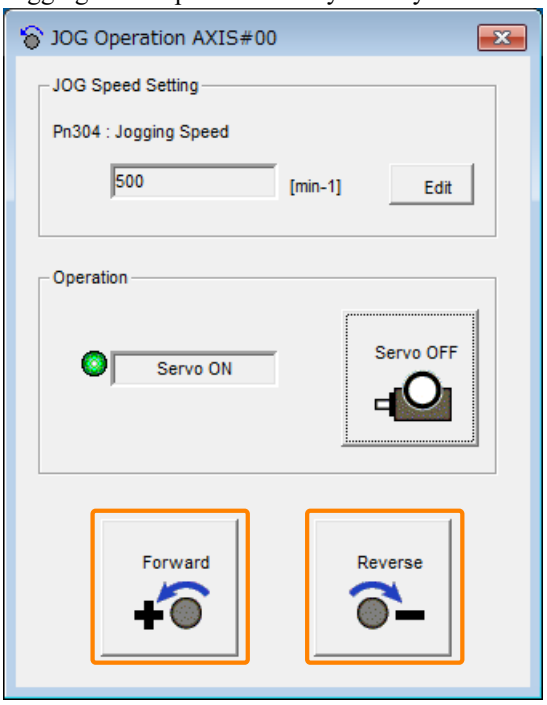

6. **Turn the power to the SERVOPACK OFF and ON again after you finish jogging.**

This concludes the jogging procedure.

7.4 Trial Operation with EtherCAT Communications

A trial operation example for EtherCAT communications is given below.

In this example, operation in Profile Position Mode is described.

Refer to the following chapter for details on operation with EtherCAT communications.

☞ *14 CiA402 Drive Profile on page 595*

1. **Confirm that the wiring is correct, and then connect the I/O signal connector (CN1) and EtherCAT communications connector (CN6A).**

   Refer to the following chapter for details on wiring.

   ☞ *4 Wiring and Connecting SERVOPACKs on page 115*

2. **Set the EtherCAT communications station address and PDO mappings.**

   The PDO mappings are set from the host controller. Refer to the following section for details on PDO mappings.

   ☞ *13.5 PDO Mappings on page 589*

3. **Turn ON the power to the SERVOPACK.**

   If power is being supplied correctly, the CHARGE indicator on the SERVOPACK will light.

   Note:

   If the COM indicator does not light, recheck the settings of EtherCAT setting switches (S1 and S2) and then turn the power OFF and ON again.

4. **Place the EtherCAT communications in the Operational state.**

   Refer to the following chapter for details on the EtherCAT communications status.

   ☞ *13.3 EtherCAT State Machine on page 586*

5. **Set the Modes of Operation to Profile Position Mode.**

   Refer to the following section for details on Modes of Operation.

   ☞ *15.6.9 Modes of Operation (6060h) on page 668*

6. **Change the Controlword to supply power to the motor.**

   When Statusword shows the Operation Enabled state, power is supplied to the motor.

   Note:

   Manipulate the objects that were mapped to PDOs. Values will not be written if you manipulate SDOs.

7. **Set target position, profile velocity, profile acceleration, and profile deceleration, and then manipulate Controlword to start positioning.**

   When Statusword shows the Operation Enabled state, power is supplied to the motor.

   Note:

   Manipulate the objects that were mapped to PDOs. Values will not be written if you manipulate SDOs.

8. **While operation is in progress for step 6, confirm the following items.**

Confirmation Item	Reference
Confirm that the rotational direction of the servomotor agrees with the forward or reverse reference. If they do not agree, correct the rotation direction of the servomotor.	☞ *5.4 Motor Direction Setting on page 181*
Confirm that no abnormal vibration, noise, or temperature rise occurs. If any abnormalities are found, implement corrections.	☞ *16.4 Troubleshooting Based on the Operation and Conditions of the Servomotor on page 744*

Note:

If the load machine is not sufficiently broken in before trial operation, the servomotor may become overloaded.

7.5 Trial Operation with the Servomotor Connected to the Machine

This section provides the procedure for trial operation with both the machine and servomotor.

7.5.1 Precautions

WARNING

Perform the correct operation with the servomotor connected to the machine.

There is a risk of machine damage or personal injury.

Important: If you disabled the overtravel function for trial operation of the servomotor without a load, enable the overtravel function (P-OT and N-OT signal) before you preform trial operation with the servomotor connected to the machine in order to provide protection.

If you will use a holding brake, observe the following precautions during trial operation.

- Before you check the operation of the brake, implement measures to prevent the machine from falling due to gravity and to prevent vibration from being caused by an external force.
- First check the servomotor operation and brake operation with the servomotor uncoupled from the machine. If no problems are found, connect the servomotor to the machine and perform trial operation again.

Control the operation of the brake with the /BK (Brake Output) signal from the SERVOPACK.

Refer to the following sections for information on wiring and the related parameter settings.

☞ *4.4.4 Wiring the SERVOPACK to the Holding Brake on page 152*

☞ *5.11 Holding Brake on page 200*

Important: Failures caused by incorrect wiring or incorrect voltage application in the brake circuit may cause the SERVOPACK to fail, damage the SERVOPACK, damage the equipment, or cause an accident resulting in death or injury.

Observe the precautions and instructions for wiring and trial operation precisely as described in this manual.

7.5.2 Preparations

Always confirm the following before you perform the trial operation procedure for both the machine and servomotor.

- Make sure that the procedure described in the following has been completed.
  ☞ *7.4 Trial Operation with EtherCAT Communications on page 316*
- Make sure that the SERVOPACK is connected correctly to both the host controller and the peripheral devices.
  - Safety Function wiring
    If you are not using the Safety Function, leave the safety jumper connector (provided as an accessory with the SERVOPACK) connected to CN8.
    If you are using the Safety Function, remove the safety jumper connector from CN8 and connect the Safety Function device.
  - Overtravel wiring
  - Brake wiring
  - Allocation of the /BK (Brake) signal to a pin on the I/O signal connector (CN1)
  - Emergency stop circuit wiring
  - Host controller wiring

7.5.3 Operating Procedure

1. **Enable the overtravel signals.**

   ☞ *5.10.2 Setting to Enable/Disable Overtravel on page 195*

2. **Make the settings for the protective functions, such as the Safety Function, overtravel, and the brake.**

   ☞ *4.6 Connecting Safety Function Signals on page 160*
   ☞ *5.10 Overtravel Function and Settings on page 194*
   ☞ *5.11 Holding Brake on page 200*

3. **Turn OFF the power to the SERVOPACK.**

   The control power and main circuit power will turn OFF.

4. **Couple the servomotor to the machine.**

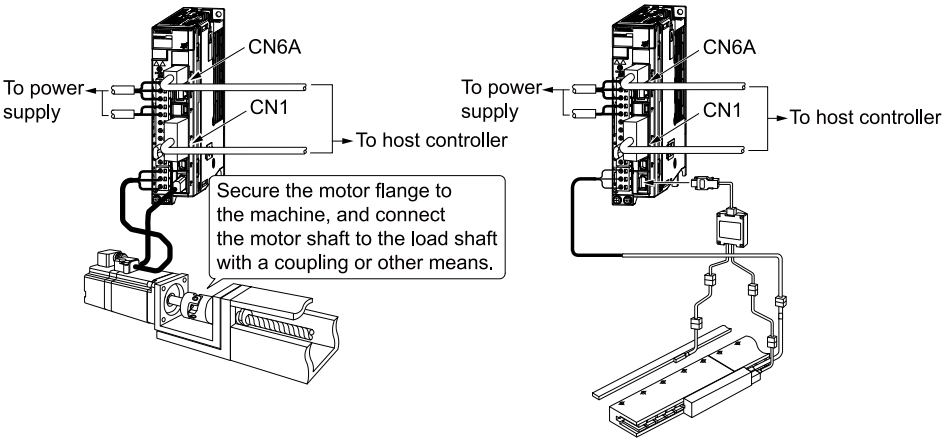

5. **Turn ON the power to the machine and host controller and turn ON the control power and main circuit power to the SERVOPACK.**

6. **Check the protective functions, such as overtravel and the brake, to confirm that they operate correctly.**

   Note:

   Enable activating an emergency stop so that the servomotor can be stopped safely should an error occur during the remainder of the procedure.

7. **Perform trial operation according to the following and confirm that the same results are obtained as when trial operation was performed on the servomotor without a load.**

   ☞ *7.4 Trial Operation with EtherCAT Communications on page 316*

8. **If necessary, adjust the servo gain to improve the servomotor response characteristics.**

   The servomotor and machine may not be broken in completely for the trial operation. Therefore, let the system run for a sufficient amount of time to ensure that it is properly broken in.

9. **For future maintenance, save the parameter settings with one of the following methods.**

   - Use the SigmaWin+ to save the parameters as a file.
   - Record the settings manually.

This concludes the procedure for trial operation with both the machine and servomotor.

7.6 Convenient Function to Use during Trial Operation

This section describes some convenient operations that you can use during trial operation.

Use them as required.

7.6.1 Program Jogging

You can use program jogging to perform continuous operation with a preset operation pattern, travel distance, movement speed, acceleration/deceleration time, waiting time, and number of movements.

You can use this operation when you set up the system in the same way as for normal jogging to move the servomotor without connecting it to the host controller in order to check servomotor operation and execute simple positioning operations.

(1) Preparations

Always check the following before you execute program jogging.

- The parameters must not be write prohibited.
- The main circuit power must be ON.
- There must be no alarms.
- There must be no hard wire base block (HWBB).
- The servo must be OFF.
- The range of machine motion and the safe travel speed of your machine must be considered when you set the travel distance and travel speed.
- There must be no overtravel.
- The settings of Pn533 or Pn585 (Program Jogging Movement Speed) and Pn385 (Maximum Motor Speed) must not satisfy either of the conditional expressions shown below.
  If either of these conditional expressions is satisfied, an A.042 (Parameter Combination Error) will occur.

  – Rotary Servomotors

  · $\text{Pn533 [min}^{-1}\text{]} \times \dfrac{\text{Encoder resolution}}{6 \times 10^5} \leq 1$

  · $\text{Maximum motor speed [min}^{-1}\text{]} \times \dfrac{\text{Encoder resolution}}{\text{Approx. } 3.66 \times 10^{12}} \geq 1$

  Information Refer to the following section for details on the encoder resolution.

  ☞ ◆ *Encoder Resolution on page 210*

  – Linear Servomotors

  · $\dfrac{\text{Pn385 [100 mm/s]}}{\text{Linear encoder scale pitch [μm]}} \times \dfrac{\text{Number of divisions of the serial converter unit}}{10} \leq 1$

  · $\dfrac{\text{Pn385 [100 mm/s]}}{\text{Linear encoder scale pitch [μm]}} \times \dfrac{\text{Number of divisions of the serial converter unit}}{\text{Approx. } 6.10 \times 10^5} \geq 1$

(2) Additional Information

- You can use the functions that are applicable to position control. However, functions related to motion control through EtherCAT communications are disabled.
- The overtravel function is enabled.

(3) Program Jogging Operation Pattern

An example of a program jogging operation pattern is given below. In this example, the motor rotation direction is set to Pn000 = n.□□□0 (use CCW as the forward direction).

Setting of Pn530 (2530h)	Setting	Operation Pattern
n.□□□0	(Waiting time → Forward by travel distance) × Number of movements	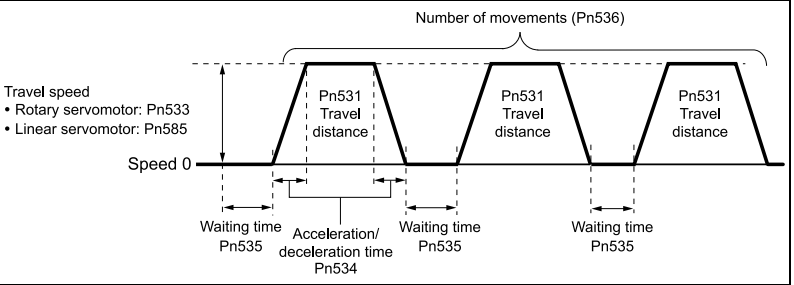
n.□□□1	(Waiting time → Reverse by travel distance) × Number of movements	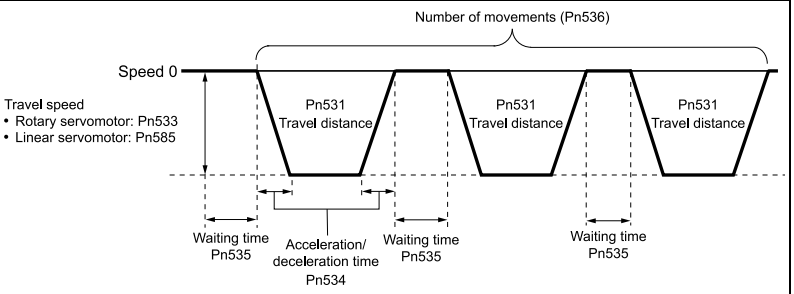
n.□□□2	(Waiting time → Forward by travel distance) × Number of movements → (Waiting time → Reverse by travel distance) × Number of movements	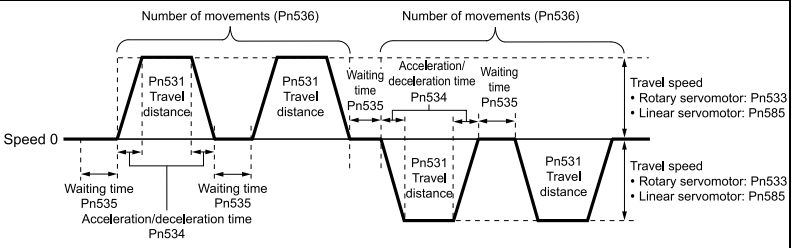
n.□□□3	(Waiting time → Reverse by travel distance) × Number of movements → (Waiting time → Forward by travel distance) × Number of movements	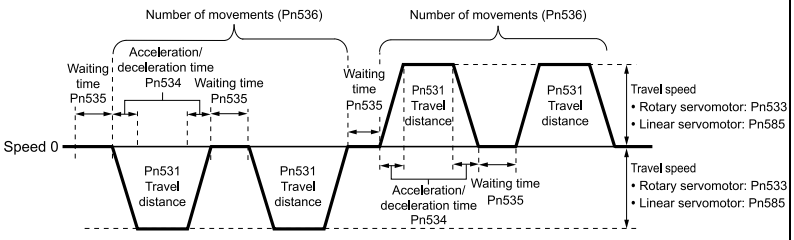
n.□□□4	(Waiting time → Forward by travel distance → Waiting time → Reverse by travel distance) × Number of movements	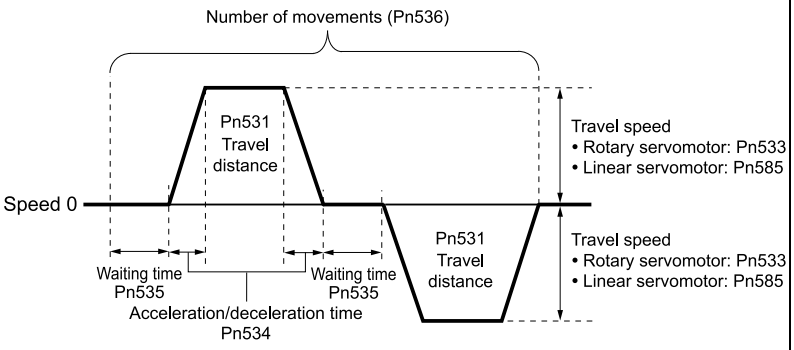
n.□□□5	(Waiting time → Reverse by travel distance → Waiting time → Forward by travel distance) × Number of movements	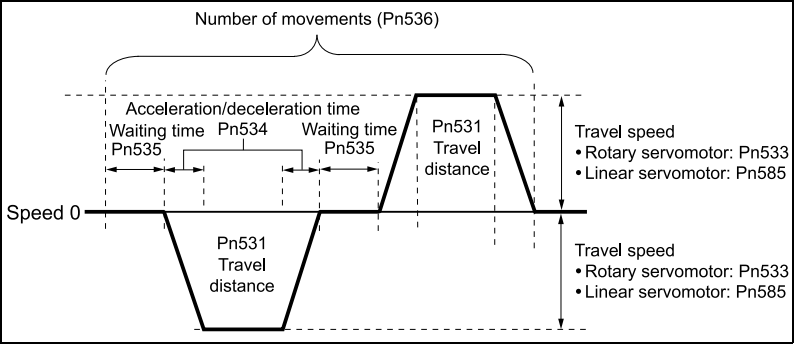

Information

If Pn530 is set to n.□□□0, n.□□□1, n.□□□4, or n.□□□5, you can set Pn536 (Program Jogging Number of Movements) to 0 to perform infinite time operation.

You cannot use infinite time operation if Pn530 is set n.□□□2 or n.□□□3.

If you perform infinite time operation from the digital operator, press the [JOG/SVON] key to turn OFF the servo to end infinite time operation.

(4) Related Parameters

Use the following parameters to set the program jogging operation pattern. Do not change the settings while the program jogging operation is being executed.

(a) Rotary Servomotors

		Program Jogging Operation Pattern Speed Pos Trq		When Enabled
Pn530 (2530h)	n.□□□X	0 Default	(Waiting time in Pn535 (2535h) → Forward by travel distance in Pn531 (2531h)) × Number of movements in Pn536 (2536h)	Immediately
		1	(Waiting time in Pn535 (2535h) → Reverse by travel distance in Pn531 (2531h)) × Number of movements in Pn536 (2536h)	
		2	(Waiting time in Pn535 (2535h) → Forward by travel distance in Pn531 (2531h)) × Number of movements in Pn536 (2536h) (Waiting time in Pn535 (2535h) → Reverse by travel distance in Pn531 (2531h)) × Number of movements in Pn536 (2536h)	
		3	(Waiting time in Pn535 (2535h) → Reverse by travel distance in Pn531 (2531h)) × Number of movements in Pn536 (2536h) (Waiting time in Pn535 (2535h) → Forward by travel distance in Pn531 (2531h)) × Number of movements in Pn536 (2536h)	
		4	(Waiting time in Pn535 (2535h) → Forward by travel distance in Pn531 (2531h) → Waiting time in Pn535 (2535h) → Reverse by travel distance in Pn531 (2531h)) × Number of movements in Pn536 (2536h)	
		5	(Waiting time in Pn535 (2535h) → Reverse by travel distance in Pn531 (2531h) → Waiting time in Pn535 (2535h) → Forward by travel distance in Pn531 (2531h)) × Number of movements in Pn536 (2536h)	

	Program Jogging Travel Distance Speed Pos Trq			
Pn531 (2531h)	Setting Range	Setting Unit	Default Setting	When Enabled
	1 to 1073741824	1 reference unit	32768	Immediately
	Program Jogging Movement Speed Speed Pos Trq			
Pn533 (2533h)	Setting Range	Setting Unit	Default Setting	When Enabled
	1 to 10000	Rotary: 1 min^{-1} Direct Drive: 0.1 min^{-1}	500	Immediately
	Program Jogging Acceleration/Deceleration Time Speed Pos Trq			
Pn534 (2534h)	Setting Range	Setting Unit	Default Setting	When Enabled
	2 to 10000	1 ms	100	Immediately
	Program Jogging Waiting Time Speed Pos Trq			
Pn535 (2535h)	Setting Range	Setting Unit	Default Setting	When Enabled
	0 to 10000	1 ms	100	Immediately
	Program Jogging Number of Movements Speed Pos Trq			
Pn536 (2536h)	Setting Range	Setting Unit	Default Setting	When Enabled
	0 to 1000	1 time	1	Immediately

(b) Linear Servomotors

		Program Jogging Operation Pattern (Speed Pos Trq)		When Enabled
Pn530 (2530h)	n.□□□X	0 Default	(Waiting time in Pn535 (2535h) → Forward by travel distance in Pn531 (2531h)) × Number of movements in Pn536 (2536h)	Immediately
		1	(Waiting time in Pn535 (2535h) → Reverse by travel distance in Pn531 (2531h)) × Number of movements in Pn536 (2536h)	
		2	(Waiting time in Pn535 (2535h) → Forward by travel distance in Pn531 (2531h)) × Number of movements in Pn536 (2536h) (Waiting time in Pn535 (2535h) → Reverse by travel distance in Pn531 (2531h)) × Number of movements in Pn536 (2536h)	
		3	(Waiting time in Pn535 (2535h) → Reverse by travel distance in Pn531 (2531h)) × Number of movements in Pn536 (2536h) (Waiting time in Pn535 (2535h) → Forward by travel distance in Pn531 (2531h)) × Number of movements in Pn536 (2536h)	
		4	(Waiting time in Pn535 (2535h) → Forward by travel distance in Pn531 (2531h) → Waiting time in Pn535 (2535h) → Reverse by travel distance in Pn531 (2531h)) × Number of movements in Pn536 (2536h)	
		5	(Waiting time in Pn535 (2535h) → Reverse by travel distance in Pn531 (2531h) → Waiting time in Pn535 (2535h) → Forward by travel distance in Pn531 (2531h)) × Number of movements in Pn536 (2536h)	

	Program Jogging Travel Distance (Speed Pos Trq)			
Pn531 (2531h)	Setting Range	Setting Unit	Default Setting	When Enabled
	1 to 1073741824	1 reference unit	32768	Immediately
	Program Jogging Movement Speed (Speed Pos Trq)			
Pn585 (2585h)	Setting Range	Setting Unit	Default Setting	When Enabled
	1 to 10000	1 mm/s	50	Immediately
	Program Jogging Acceleration/Deceleration Time (Speed Pos Trq)			
Pn534 (2534h)	Setting Range	Setting Unit	Default Setting	When Enabled
	2 to 10000	1 ms	100	Immediately
	Program Jogging Waiting Time (Speed Pos Trq)			
Pn535 (2535h)	Setting Range	Setting Unit	Default Setting	When Enabled
	0 to 10000	1 ms	100	Immediately
	Program Jogging Number of Movements (Speed Pos Trq)			
Pn536 (2536h)	Setting Range	Setting Unit	Default Setting	When Enabled
	0 to 1000	1 time	1	Immediately

(5) Applicable Tools

The following table lists the tools that you can use to perform program jogging.

Tool	Fn No./Function Name	Reference
Digital Operator	Fn004	Σ-7/Σ-X series Digital Operator Operating Manual (Manual No.: SIEP S800001 33)
SigmaWin+	[Operation] - [Program JOG Operation]	*(6) Operating Procedure on page 322*

(6) Operating Procedure

Use the following procedure for program jogging.

1. **Click the [ ] button for the servo drive in the workspace of the Main Window of the SigmaWin+.**

2. **Click [Jog Program] in the [Menu] window.**

   The [Jog Program] window will be displayed.

3. **Read the warnings and then click the [OK] button.**

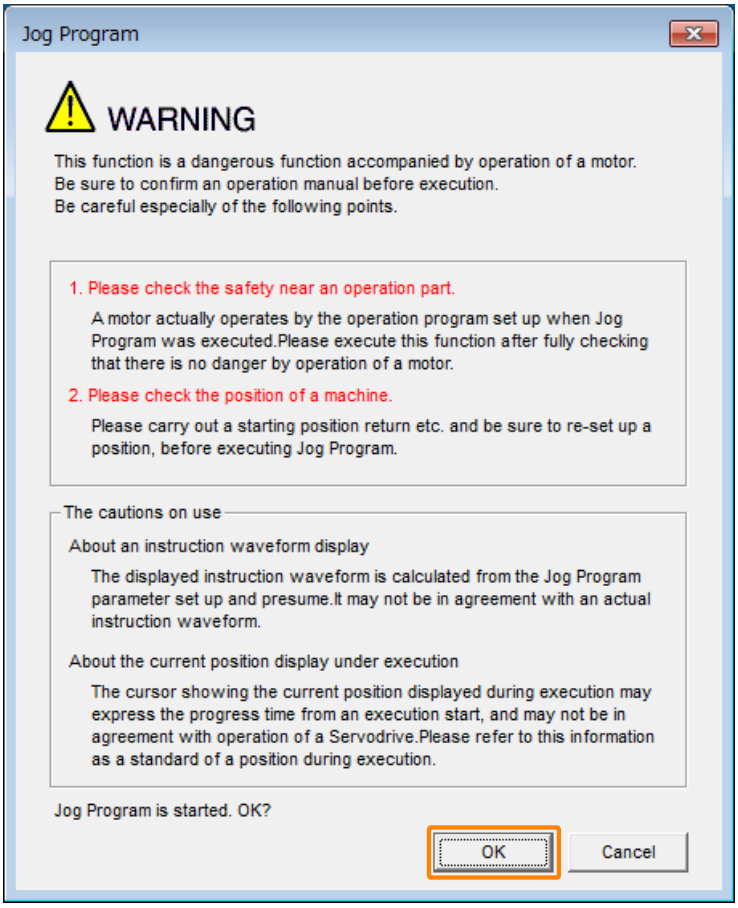

4. **Set the operating conditions, click the [Apply] button, and then click the [Run] button.**

   A graph of the operation pattern will be displayed.

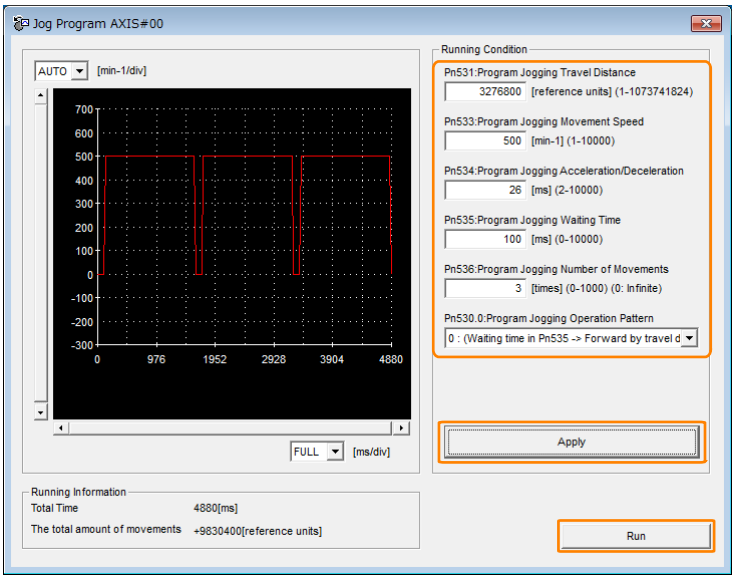

5. **Click the [Servo ON] button and then the [Execute] button. The program jogging operation will be executed.**

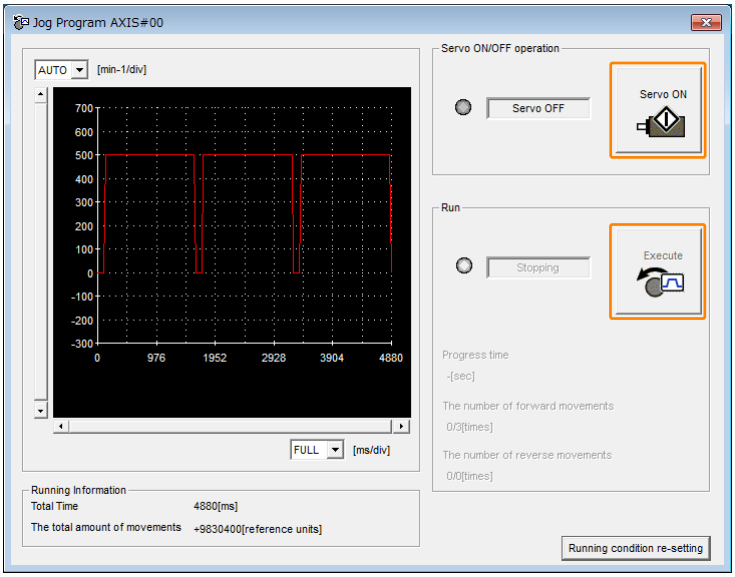

> **Important**
>
> The stopping method if you cancel the program jogging operation while the servomotor is operating is given below.
>
> - If you cancel operation with the [Servo OFF] button, the servomotor will stop according to the setting of Pn001 = n.□□□X (Motor Stopping Method for Servo OFF).
> - If you cancel operation with the [Cancel] button, the servomotor will decelerate to a stop and then enter a zero-clamped state.

This concludes the program jogging procedure.

7.6.2 Origin Search

The origin search operation positions the motor to phase C of the encoder and then clamps it there.

Even when using fully-closed loop control the motor is positioned to phase C of the encoder, and not to the external encoder origin.

The overtravel function is disabled during an origin search.

> **⚠ CAUTION**
>
> **Make sure that the load is not coupled when you execute an origin search.**
>
> Since the P-OT (Forward Drive Prohibit Input) signal and N-OT (Reverse Drive Prohibit Input) signal are disabled during an origin search, the machine may be damaged by exceeding its movement limits.

Use an origin search when it is necessary to align encoder phase C of the servomotor with the machine origin. The following speeds are used for origin searches.

- Rotary servomotors: 60 min^{-1}
- Direct drive servomotors: 6 min^{-1}
- Linear servomotors: 15 mm/s

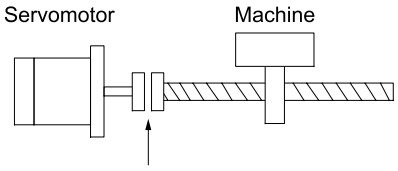

To align the C phase of the encoder with the machine origin

(1) Preparations

Always check the following before you execute an origin search.

- The load must not be coupled.
- The parameters must not be write prohibited.
- The main circuit power must be ON.
- There must be no alarms.
- There must be no hard wire base block (HWBB).
- The servo must be OFF.

(2) Applicable Tools

The following table lists the tools that you can use to perform origin search.

Tool	Fn No./Function Name	Reference
Digital Operator	Fn003	Σ-7/Σ-X-Series Digital Operator Operating Manual (Manual No.: SIEP S800001 33)
SigmaWin+ *1	[Encoder Setting] - [Origin Search]	*(3) Operating Procedure on page 325*

*1 Cannot be used when connecting a linear servomotor.

(3) Operating Procedure

Use the following procedure to perform an origin search.

1. **Click the [ ] button for the servo drive in the workspace of the Main Window of the SigmaWin+.**
2. **Click [Origin Search] in the [Menu] window.**

   The [Origin Search] window will be displayed.
3. **Read the warnings and then click the [OK] button.**

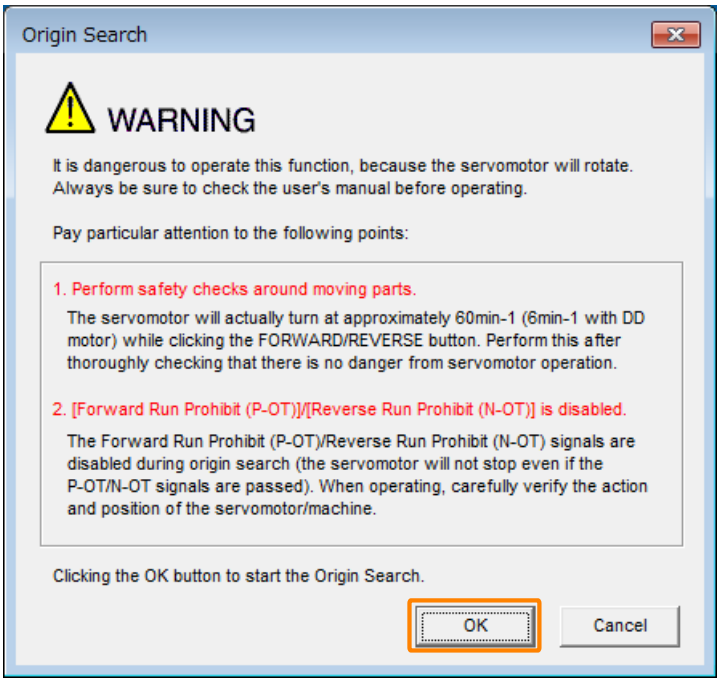

4. **Click the [Servo ON] button.**

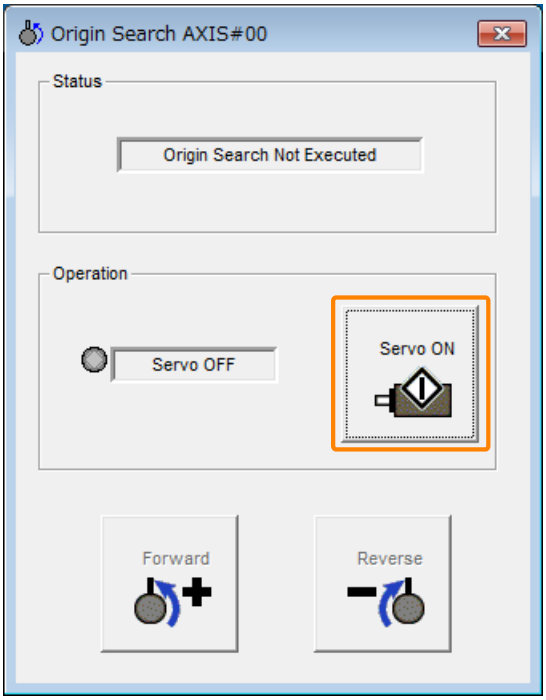

5. **Click the [Forward] button or the [Reverse] button.**

An origin search will be performed only while you hold down the mouse button. The motor will stop when the origin search has been completed.

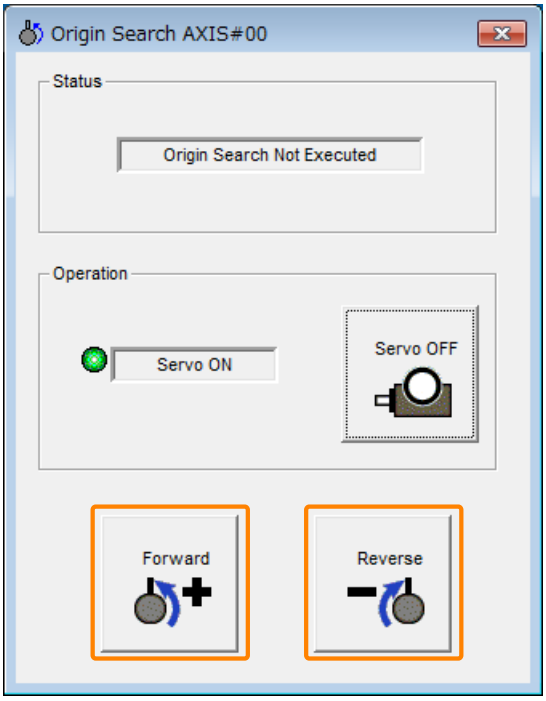

This concludes the origin search procedure.

7.6.3 Test without a Motor

A test without a motor is used to check the operation of the host controller and peripheral devices by simulating the operation of the servomotor in the SERVOPACK, i.e., without actually operating a servomotor. This test allows you to check wiring, debug the system, and verify parameters to shorten the time required for setup work and to prevent damage to the machine that may result from possible malfunctions. The operation of the servomotor can be checked with this test regardless of whether the servomotor is actually connected or not.

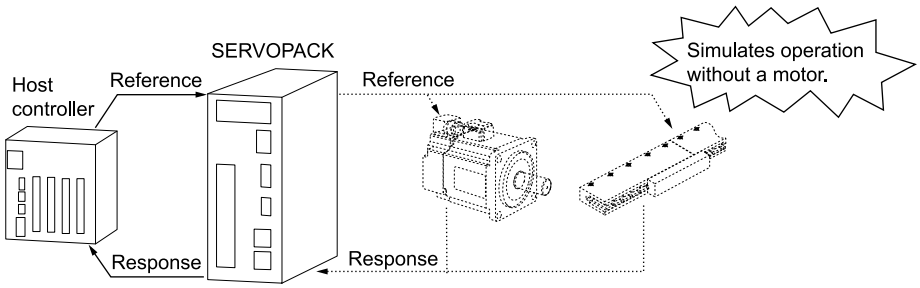

Use Pn00C = n.□□□X to enable or disable the test without a motor.

		Function Selection for Test without a Motor Speed Pos Trq		When Enabled
Pn00C (200Ch)	n.□□□X	0 Default	Disable tests without a motor.	After restart
		1	Enable tests without a motor.	

Information An asterisk is displayed on the status display of the digital operator while a test without a motor is being executed.

(1) Motor Information and Encoder Information

The motor and encoder information is used during tests without a motor. The source of the information depends on the connection status.

(a) Rotary Servomotors

Motor Connection Status	Information That Is Used	Source of Information
Connected	Motor information • Motor rated speed • Maximum motor speed	Information in the servomotor that is connected
	Encoder information • Encoder resolution • Encoder type	
Not connected	Motor information • Motor rated speed • Maximum motor speed	• Setting of Pn000 = n.X□□□ (Rotary/Linear Servomotor Startup Selection When Encoder Is Not Connected) • Motor rated speed and maximum motor speed The values previously saved in the SERVOPACK will be used for the motor rated speed and maximum motor speed. Use the motor displays (Un020: Motor Rated Speed and Un021: Maximum Motor Speed) to check the values.
	Encoder information • Encoder resolution • Encoder type	• Encoder resolution: Setting of Pn00C = n.□□X□ (Encoder Resolution for Tests without a Motor) • Encoder type: Setting of Pn00C = n.□X□□ (Encoder Type Selection for Tests without a Motor)

If you use fully-closed loop control, the external encoder information is also used.

External Encoder Connection Status	Information That Is Used	Source of Information
Connected	• External encoder number of divisions • External encoder type	Information in the external encoder that is connected
Not connected		Because you do not connect an external encoder to the SERVPOACK, the following values will always be displayed. • Number of divisions: 256 • Encoder type: Incremental encoder

(b) Linear Servomotor

Motor Connection Status	Information That Is Used	Source of Information
Connected	Motor information	Information in the motor that is connected
	Linear encoder information • Number of divisions • Encoder scale pitch • Encoder type	Information in the linear encoder that is connected
Not connected	Motor information	Setting of Pn000 = n.X□□□ (Rotary/Linear Servomotor Startup Selection When Encoder Is Not Connected)
	Encoder information • Number of divisions • Encoder scale pitch • Encoder type	• Number of divisions: 256 • Encoder scale pitch: Setting of Pn282 (Linear Encoder Scale Pitch) • Encoder type: Setting of Pn00C = n.□X□□ (Encoder Type Selection for Tests without a Motor)

(c) Related Parameters

		Rotary/Linear Servomotor Startup Selection When Encoder Is Not Connected Speed Pos Trq		When Enabled
Pn000 (2000h)	n.X□□□	0 Default	When an encoder is not connected, start as SERVOPACK for rotary servomotor.	After restart
		1	When an encoder is not connected, start as SERVOPACK for linear servomotor.	

	Linear Encoder Scale Pitch Speed Pos Trq			
Pn282 (2282h)	Setting Range	Setting Unit	Default Setting	When Enabled
	0 to 6553600	0.01 µm	0	After restart

		Encoder Resolution for Tests without a Motor Speed Pos Trq		When Enabled
Pn00C (200Ch)	n.□□X□	0	Use 13 bits.	After restart
		1	Use 20 bits.	
		2	Use 22 bits.	
		3	Use 24 bits.	
		4 Default	Use 26 bits.	
		Encoder Type Selection for Tests without a Motor Speed Pos Trq		When Enabled
Pn00C (200Ch)	n.□X□□	0 Default	Use an incremental encoder.	After restart
		1	Use an absolute encoder.	

(2) Motor Position and Speed Responses

For a test without a motor, the following responses are simulated for references from the host controller according to the gain settings for position or speed control.

- Motor position
- Motor speed
- External encoder position

The load model will be for a rigid system with the moment of inertia ratio that is set in Pn103.

(3) Restrictions

The following functions cannot be used during the test without a motor.

- Regeneration and dynamic brake operation

- Brake output signal
- Items marked with "×" in the following utility function table

SigmaWin+		Digital Operator		Executable?		Reference
Button in Menu Window	SigmaWin+ Function Name	Fn No.	Utility Function Name	Motor Not Connected	Motor Connected	
Basic Functions	Initialize *1	Fn005	Initialize Parameters	○	○	☞ 5.1.5 Initializing SERVOPACK Parameter Settings on page 176
	Software Reset	Fn030	Software Reset	○	○	☞ 6.10 Software Reset on page 274
	Product Information	Fn011	Display Servomotor Model	○	○	☞ 9.1 Monitoring Product Information on page 496
		Fn012	Display Software Version	○	○	
		Fn01E	Display SERVOPACK and Servomotor IDs	○	○	
		Fn01F	Display Servomotor ID from Feedback Option Module	○	○	
Encoder Setting	Absolute Encoder Reset	Fn008	Reset Absolute Encoder	×	○	☞ 5.15 Resetting the Absolute Encoder on page 217
	Multiturn Limit Setting	Fn013	Multiturn Limit Setting after Multiturn Limit Disagreement Alarm	×	○	☞ 6.8.8 A.CC0 (Multiturn Limit Disagreement Alarm) on page 266
	Origin Search	Fn003	Origin Search	○	○	☞ 7.6.2 Origin Search on page 324
	Set Origin	Fn020	Set Absolute Linear Encoder Origin	×	○	☞ 5.16 Setting the Origin of the Absolute Encoder on page 220
	Polarity Detection	Fn080	Polarity Detection	×	×	☞ 5.9 Polarity Detection on page 191
Trouble-shooting	Display Alarm	Fn000	Display Alarm History	○	○	☞ 16.2.4 Displaying the Alarm History on page 731
		Fn006	Clear Alarm History	○	○	☞ 16.2.5 Clearing the Alarm History on page 732
		Fn014	Reset Option Module Configuration Error	○	○	☞ 16.2.6 Resetting Option Module Configuration Error on page 733
	Reset Motor Type Alarm	Fn021	Reset Motor Type Alarm	○	○	☞ 16.2.7 Resetting Motor Type Alarms on page 735
Operation	Jog	Fn002	Jog	○	○	☞ 7.3 Trial Operation for the Servomotor without a Load on page 313
	Program JOG Operation	Fn004	Program JOG Operation	○	○	☞ 7.6.1 Program Jogging on page 319

Continued on next page.

Continued from previous page.

SigmaWin+		Digital Operator		Executable?		Reference
Button in Menu Window	SigmaWin+ Function Name	Fn No.	Utility Function Name	Motor Not Con-nec-ted	Motor Con-nected	
Tuning	Tuning - Autotuning without Host Reference	Fn201	Advanced Autotuning without Reference	×	×	☞ *8.7 Autotuning without a Host Reference on page 369*
	Tuning - Autotuning with Host Reference	Fn202	Advanced Autotuning with Reference	×	×	☞ *8.8 Autotuning with a Host Reference on page 388*
	Tuning - Custom Tuning	Fn203	One-Parameter Tuning	×	×	☞ *8.9 Custom Tuning on page 402*
	Tuning - Custom Tuning - Adjust Anti-resonance Control	Fn204	Adjust Anti-resonance Control	×	×	☞ *8.10 Anti-Resonance Control Adjustment on page 411*
	Tuning - Custom Tuning - Vibration Suppression	Fn205	Vibration Suppression	×	×	☞ *8.11 Vibration Suppression on page 417*
	Response Level Setting	Fn200	Tuning-less Level Setting	×	×	☞ *8.4 Tuning-less Function on page 343*
Diagnostic	Easy FFT	Fn206	Easy FFT	×	×	☞ *8.17.2 Easy FFT on page 490*
Others	Adjust the Analog Monitor Output	Fn00C	Adjust Analog Monitor Output Offset	○	○	☞ *9.3.3 Using the Analog Monitors on page 509*
		Fn00D	Adjust Analog Monitor Output Gain	○	○	
	Adjust the Motor Current Detection Offsets	Fn00E	Autotune Motor Current Detection Signal Offset	×	○	☞ *6.12 Adjusting the Motor Current Detection Signal Offset on page 279*
		Fn00F	Manually Adjust Motor Current Detection Signal Offset	×	○	
	Initialize Vibration Detection Level	Fn01B	Initialize Vibration Detection Level	×	×	☞ *6.11 Vibration Detection Level Initialization on page 276*
	Write Prohibited Setting	Fn010	Write Prohibition Setting	○	○	☞ *5.1.4 Write Prohibition Setting for SERVOPACK Parameters on page 173*

*1 An [Initialize] button will be displayed in the [Edit Parameters] window.

8

Tuning

Provides information on the flow of tuning, details on tuning functions, and related operating procedures.

8.1 Overview and Flow of Tuning 335
8.1.1 Tuning Functions 336
8.1.2 Diagnostic Tool 337

8.2 Monitoring Methods 338

8.3 Precautions to Ensure Safe Tuning 339
8.3.1 Overtravel Settings 339
8.3.2 Torque Limit Settings 339
8.3.3 Setting the Position Deviation Overflow Alarm Level 339
8.3.4 Vibration Detection Level Setting 341
8.3.5 Setting the Position Deviation Overflow Alarm Level at Servo ON 341

8.4 Tuning-less Function 343
8.4.1 Application Restrictions 343
8.4.2 Operating Procedure 344
8.4.3 Troubleshooting Alarms 346
8.4.4 Parameters Disabled by Tuning-less Function 346
8.4.5 Automatically Adjusted Function Setting 347
8.4.6 Related Parameters 347

8.5 Moment of Inertia Estimation without a Host Reference 348
8.5.1 Outline 348
8.5.2 Restrictions 348
8.5.3 Applicable Tools 349
8.5.4 Operating Procedure 349

8.6 Moment of Inertia Estimation with a Host Reference 365
8.6.1 Outline 365
8.6.2 Restrictions 365
8.6.3 Applicable Tools 366
8.6.4 Operating Procedure 366

8.7 Autotuning without a Host Reference 369
8.7.1 Outline 369
8.7.2 Restrictions 370
8.7.3 Applicable Tools 371
8.7.4 Operating Procedure 371
8.7.5 Operating Procedure for Multi-Axis Simultaneous Tuning 376
8.7.6 Troubleshooting Problems in Autotuning without a Host Reference 383
8.7.7 Automatically Adjusted Function Setting 384
8.7.8 Related Parameters 386

8.8 Autotuning with a Host Reference 388
8.8.1 Outline 388
8.8.2 Restrictions 388
8.8.3 Applicable Tools 389
8.8.4 Operating Procedure 389
8.8.5 Operating Procedure for Multi-Axis Simultaneous Tuning 393
8.8.6 Troubleshooting Problems in Autotuning with a Host Reference 399
8.8.7 Automatically Adjusted Function Setting 400
8.8.8 Related Parameters 401

8.9 Custom Tuning 402
8.9.1 Outline 402
8.9.2 Preparations 402
8.9.3 Applicable Tools 403
8.9.4 Operating Procedure 403
8.9.5 Automatically Adjusted Function Setting 408
8.9.6 Tuning Example for Tuning Mode 2 or 3 408
8.9.7 Related Parameters 409

8.10 Anti-Resonance Control Adjustment 411
8.10.1 Outline 411
8.10.2 Preparations 411
8.10.3 Applicable Tools 411
8.10.4 Operating Procedure 412
8.10.5 Related Parameters 415
8.10.6 Suppressing Different Vibration Frequencies with Anti-resonance Control 415

8.11 Vibration Suppression 417
8.11.1 Outline 417
8.11.2 Preparations 418
8.11.3 Applicable Tools 418
8.11.4 Operating Procedure 418

8.11.5 Setting Combined Functions 420
8.11.6 Related Parameters 420

8.12 Speed Ripple Compensation 421
8.12.1 Outline 421
8.12.2 Speed Ripple Compensation when a Rotary Servomotor Is Connected 421
8.12.3 Speed Ripple Compensation when a Linear Servomotor Is Connected 427
8.12.4 Speed Ripple Compensation during Torque Control Mode and during Torque Limits 439
8.12.5 Parameter Settings 440

8.13 Load Fluctuation Compensation Control 443
8.13.1 Outline 443
8.13.2 Application Restrictions 443
8.13.3 Preparations 443
8.13.4 Required Parameter Settings 443
8.13.5 Operating Procedure 444
8.13.6 Parameters Disabled by a Load Fluctuation Compensation Control 444

8.14 Less-Deviation Control Function 446
8.14.1 Outline 446
8.14.2 Restrictions 447
8.14.3 Preparations 447
8.14.4 Tuning Flow 448
8.14.5 Adjustment Example 450
8.14.6 Gain Switching Combinations 453
8.14.7 Gain Selection Method 454
8.14.8 Monitor the Position Deviation after the Position Reference Filter 454

8.15 Additional Adjustment Functions 455
8.15.1 Gain Switching 455
8.15.2 Friction Compensation 460
8.15.3 Gravity Compensation 462
8.15.4 Output Torque Compensation 463
8.15.5 Current Control Mode Selection 464
8.15.6 Current Gain Level Setting 464
8.15.7 Speed Detection Method Selection 464
8.15.8 Speed Feedback Filter 465
8.15.9 Backlash Compensation 465

8.16 Manual Tuning 471

8.16.1 Tuning the Servo Gains 471
8.16.2 Compatible Adjustment Functions 485

8.17 Diagnostic Tool 489
8.17.1 Mechanical Analysis 489
8.17.2 Easy FFT 490

8.1 Overview and Flow of Tuning

Tuning is performed to optimize response by adjusting the servo gains in the SERVOPACK.

The servo gains are set using a combination of parameters, such as parameters for the speed loop gain, position loop gain, filters, friction compensation, and moment of inertia ratio. These parameters influence each other, so you must consider the balance between them.

The servo gains are set to stable settings by default. Use the various tuning functions to increase the response even further for the conditions of your machine.

The basic tuning procedure is shown in the following flowchart. Make suitable adjustments considering the conditions and operating requirements of your machine.

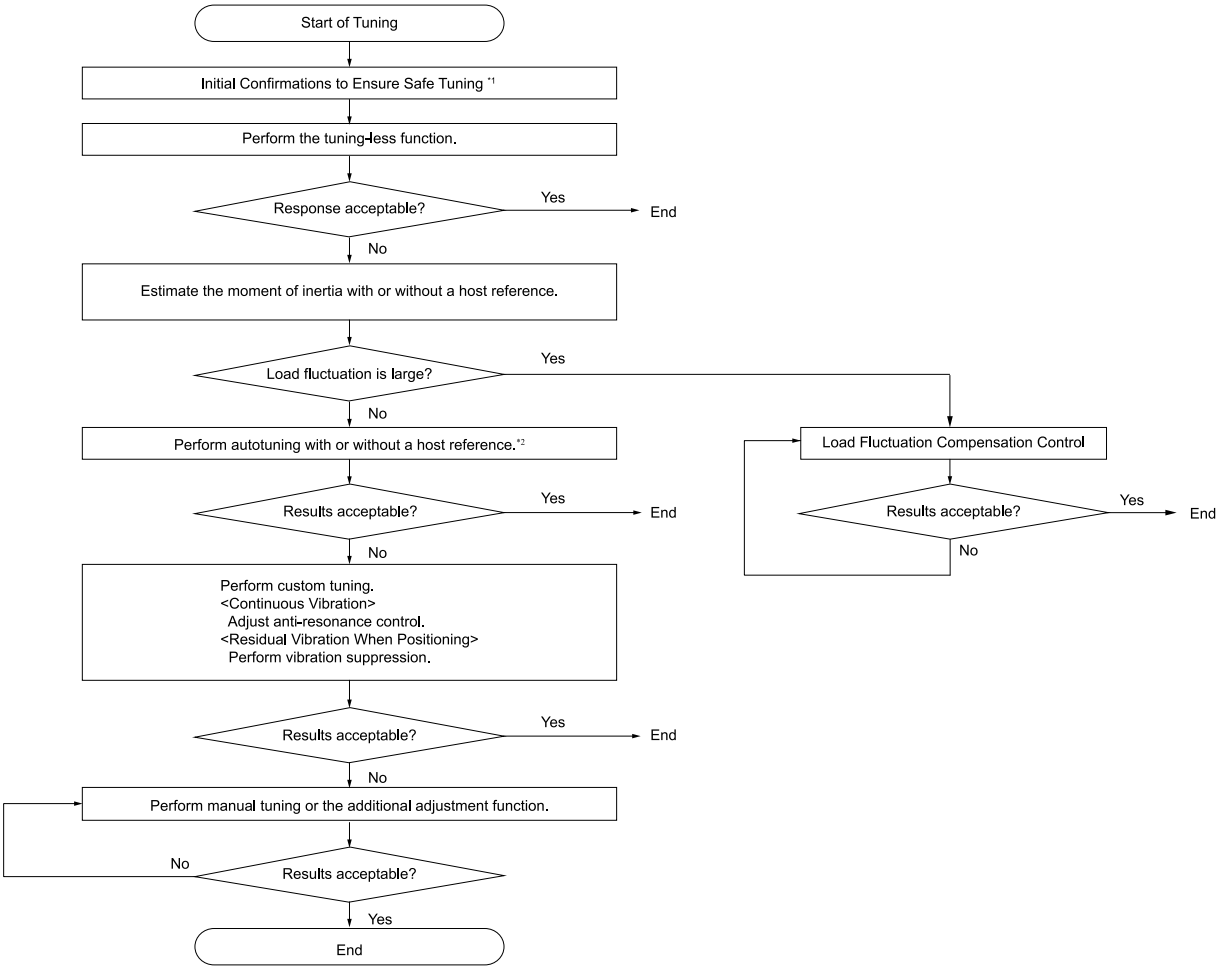

*1 Refer to the following section for details.
☞ *8.3 Precautions to Ensure Safe Tuning on page 339*

*2 If possible, perform autotuning with a host reference.
If a host controller is not available, set an operation pattern that is as close as possible to the host reference and perform autotuning without a host reference.
If an operation pattern that is close to the host reference is not possible, perform autotuning with a host reference while performing program jogging.

8.1.1 Tuning Functions

The following table provides an overview of the tuning functions.

Tuning Function	Outline	Applicable Control Methods	Reference
Tuning-less Function	This automatic adjustment function is designed to enable stable operation without servo tuning. This function can be used to obtain a stable response regardless of the type of machine or changes in the load. You can use it with the default settings.	Speed control or position control	☞ *8.4 Tuning-less Function on page 343*
Moment of Inertia Estimation without a Host Reference	The moment of inertia during operation is automatically calculated by the SERVOPACK for round-trip operation. A reference from the host controller is not used. The moment of inertia ratio that is calculated here is used in other tuning functions.	Speed control, position control, or torque control	☞ *8.5 Moment of Inertia Estimation without a Host Reference on page 348*
Moment of Inertia Estimation with a Host Reference	The load moment of inertia is estimated from operation by reference (position control) from the host controller. The moment of inertia ratio that is calculated here is used in other tuning functions.	Speed control, position control, or torque control	☞ *8.6 Moment of Inertia Estimation with a Host Reference on page 365*
Autotuning without a Host Reference	The following parameters are automatically adjusted in the internal references in the SERVOPACK during automatic operation. • Gains (e.g., position loop gain and speed loop gain) • Filters (torque reference filter and notch filters) • Friction compensation • Anti-resonance control • Vibration suppression	Speed control or position control	☞ *8.7 Autotuning without a Host Reference on page 369*
Autotuning with a Host Reference	The following parameters are automatically adjusted with the position reference input from the host controller while the machine is in operation. You can use this function for fine-tuning after you perform autotuning without a host reference. • Gains (e.g., position loop gain and speed loop gain) • Filters (torque reference filter and notch filters) • Friction compensation • Anti-resonance control • Vibration suppression	Position control	☞ *8.8 Autotuning with a Host Reference on page 388*
Custom Tuning	The following parameters are adjusted with the position reference or speed reference input from the host controller while the machine is in operation. • Gains (e.g., position loop gain and speed loop gain) • Filters (torque reference filter and notch filters) • Friction compensation • Anti-resonance control	Speed control or position control	☞ *8.9 Custom Tuning on page 402*
Anti-Resonance Control Adjustment	This function effectively suppresses continuous vibration.	Speed control or position control	☞ *8.10 Anti-Resonance Control Adjustment on page 411*
Vibration Suppression	This function effectively suppresses residual vibration if it occurs when positioning.	Position control	☞ *8.11 Vibration Suppression on page 417*
Load Fluctuation Compensation Control	This function is used to control fluctuations in response for applications where the load (moment of inertia) fluctuates greatly.	Position control, speed control, or torque control	☞ *8.13 Load Fluctuation Compensation Control on page 443*
Less-Deviation Control Function	This function reduces position deviation during operations, including during acceleration/deceleration and can improve trajectory tracking.	Position Control	☞ *8.14 Less-Deviation Control Function on page 446*

Continued on next page.

Continued from previous page.

Tuning Function	Outline	Applicable Control Methods	Reference
Additional Adjustment Functions	This function combines autotuning with custom tuning. You can use it to improve adjustment results.	Depends on the functions that you use.	☞ *8.15 Additional Adjustment Functions on page 455*
Manual Tuning	You can manually adjust the servo gains to adjust the response.	Speed control, position control, or torque control	☞ *8.16 Manual Tuning on page 471*

8.1.2 Diagnostic Tool

You can use the following tools to measure the frequency characteristics of the machine and set notch filters.

Diagnostic Tool	Outline	Applicable Control Methods	Reference
Mechanical Analysis	The machine is subjected to vibration to detect resonance frequencies. The measurement results are displayed as waveforms or numeric data.	Speed control, position control, or torque control	☞ *8.17.1 Mechanical Analysis on page 489*
Easy FFT	The machine is subjected to vibration to detect resonance frequencies. The measurement results are displayed only as numeric data.	Speed control, position control, or torque control	☞ *8.17.2 Easy FFT on page 490*

8.2 Monitoring Methods

You can use the data tracing function of the SigmaWin+ or the analog monitor signals of the SERVOPACK for monitoring. If you perform custom tuning or manual tuning, always use the above functions to monitor the machine operating status and SERVOPACK signal waveform while you adjust the servo gains.

Check the adjustment results with the following response waveforms.

- Position Control

Item	Unit	
	Rotary Servomotor	Linear Servomotor
Torque reference	%	
Feedback speed	min^{-1}	mm/s
Position reference speed	min^{-1}	mm/s
Position deviation	Reference units	

- Speed Control

Item	Unit	
	Rotary Servomotor	Linear Servomotor
Torque reference	%	
Feedback speed	min^{-1}	mm/s
Reference speed	min^{-1}	mm/s

- Torque Control

Item	Unit	
	Rotary Servomotor	Linear Servomotor
Torque reference	%	
Feedback speed	min^{-1}	mm/s

8.3 Precautions to Ensure Safe Tuning

⚠ CAUTION

Observe the following precautions when you perform tuning.

- **Do not touch the rotating parts of the motor when the servo is ON.**
- **Before starting the servomotor, make sure that an emergency stop can be performed at any time.**
- **Make sure that trial operation has been successfully performed without any problems.**
- **Provide an appropriate stopping device on the machine to ensure safety.**

There is a risk of machine damage or injury.

Perform the following settings in a way that is suitable for tuning.

8.3.1 Overtravel Settings

Overtravel settings are made to force the servomotor to stop for a signal input from a limit switch when a moving part of the machine exceeds the safe movement range.

Refer to the following section for details.

☞ *5.10 Overtravel Function and Settings on page 194*

8.3.2 Torque Limit Settings

You can limit the torque that is output by the servomotor based on calculations of the torque required for machine operation. You can use torque limits to reduce the amount of shock applied to the machine when problems occur, such as collisions or interference. If the torque limit is lower than the torque that is required for operation, overshooting or vibration may occur.

Refer to the following section for details.

☞ *6.7 Selecting Torque Limits on page 256*

8.3.3 Setting the Position Deviation Overflow Alarm Level

The position deviation overflow alarm is a protective function that is enabled when the SERVOPACK is used in position control.

If the alarm level is set to a suitable value, the SERVOPACK will detect excessive position deviation and will stop the servomotor if the servomotor operation does not agree with the reference.

The position deviation is the difference between the position reference value and the actual position.

You can calculate the position deviation from the setting of Position Loop Gain (Pn102, Pn106, Pn12D, and Pn130) and the motor speed with the following formula.

- Rotary Servomotors

$$\text{Position deviation [reference units]} = \frac{\text{Motor speed [min}^{-1}\text{]}}{60} \times \frac{\text{Encoder resolution}}{\text{Pn102 [0.1/s]/10}^{*2,\,*3}} \times \frac{\text{Denominator}^{*1}}{\text{Numerator}}$$

- Linear Servomotors

$$\text{Position deviation [reference units]} = \frac{\text{Motor speed [mm/s]}}{\text{Pn102 [0.1/s]/10}^{*2,\,*3}} \times \frac{\text{Number of divisions}}{\text{Linear encoder scale pitch [}\mu\text{m]/1000}} \times \frac{\text{Denominator}}{\text{Numerator}}$$

Pn520 (Position Deviation Overflow Alarm Level) [setting unit: reference units]

- Rotary Servomotors

$$\text{Pn520} > \frac{\text{Maximum motor speed [min}^{-1}\text{]}}{60} \times \frac{\text{Encoder resolution}}{\text{Pn102 [0.1/s]/10}^{*2,\,*3}} \times \frac{\text{Denominator}^{*1}}{\text{Numerator}} \times \underline{\underline{(1.2 \text{ to } 2)^{*4}}}$$

- Linear Servomotors

$$\text{Pn520} > \frac{\text{Maximum motor speed [mm/s]}}{\text{Pn102 [0.1/s]/10}^{*2,\,*3}} \times \frac{\text{Number of divisions}}{\text{Linear encoder pitch [}\mu\text{m] /1000}} \times \frac{\text{Denominator}^{*1}}{\text{Numerator}} \times \underline{\underline{(1.2 \text{ to } 2)^{*4}}}$$

*1 Refer to the following section for details.
☞ *5.14 Setting Unit Systems on page 209*

*2 For gain 1 when Pn140 is set to n.□□□1 (use model following control), use the setting of Pn141 (Model Following Control Gain) instead of the setting of Pn102 (Position Loop Gain). For gain 2, use the setting of Pn148 (Second Model Following Control Gain) instead of the setting of Pn106 (Second Position Loop Gain).
For gain 3, use the setting of Pn15B (Third Model Following Control Gain) instead of the setting of Pn12D (Third Position Loop Gain). For gain 4, use the setting of Pn15D (Fourth Model Following Control Gain) instead of the setting of Pn130 (Fourth Position Loop Gain).

*3 To check the setting of Pn102, Pn106, Pn12D, and Pn102 on the digital operator, set Pn00B to n.□□□1 (display all parameters).

*4 The underlined coefficient "× (1.2 to 2)" adds a margin to prevent an A.d00 alarm (Position Deviation Overflow) from occurring too frequently.

If you set a value that satisfies the formula, an A.d00 alarm (Position Deviation Overflow) should not occur during normal operation.

If the servomotor operation does not agree with the reference, position deviation will occur, an error will be detected, and the servomotor will stop.

The following calculation example uses a rotary servomotor with a maximum motor speed of 7000 and an encoder resolution of 67108864 (26 bits). Pn102 is set to 400. $\frac{\text{Denominator}}{\text{Numerator}} = \frac{1}{64}$

$$\text{Pn520} = \frac{7000}{60} \times \frac{67108864}{400/10} \times \frac{1}{64} \times 2$$

$$= 3058347 \times 2$$

$$= 6116694$$

If the acceleration/deceleration rate required for the position reference exceeds the tracking capacity of the servomotor, the tracking delay will increase and the position deviation will no longer satisfy the above formulas. If this occurs, lower the acceleration/deceleration rate so that the servomotor can follow the position reference or increase the position deviation overflow alarm level.

(1) Related Parameters

Pn520 (2520h)	Position Deviation Overflow Alarm Level			Speed Pos Trq
	Setting Range	Setting Unit	Default Setting	When Enabled
	1 to 1073741823	1 reference unit	6116694	Immediately
Pn51E (251Eh)	Position Deviation Overflow Warning Level			Speed Pos Trq
	Setting Range	Setting Unit	Default Setting	When Enabled
	10 to 100	1%	100	Immediately

(2) Related Alarms

Alarm Number	Alarm Name	Alarm Meaning
A.d00	Position Deviation Overflow	The setting of Pn520 (Position Deviation Overflow Alarm Level) was exceeded by the position deviation while the servo was ON.

(3) Related Warnings

Warning Number	Warning Name	Warning Meaning
A.900	Position Deviation Overflow	The position deviation exceeded the percentage set with the following formula: (Pn520 × Pn51E/100)

8.3.4 Vibration Detection Level Setting

You can set Pn312 (Vibration Detection Level) to more accurately detect A.520 alarms (Vibration Alarm) and A.911 warnings (Vibration) when vibration is detected during machine operation.

Set the initial vibration detection level to an appropriate value. Refer to the following section for details.

☞ *6.11 Vibration Detection Level Initialization on page 276*

8.3.5 Setting the Position Deviation Overflow Alarm Level at Servo ON

If the servo is turned ON when there is a large position deviation, the servomotor will attempt to return to the original position to bring the position deviation to 0, which may create a hazardous situation. To prevent this, you can set a position deviation overflow alarm level at servo ON to restrict operation.

The related parameters and alarms are given in the following tables.

(1) Related Parameters

Pn526 (2526h)	Position Deviation Overflow Alarm Level at Servo ON			Speed **Pos** Trq
	Setting Range	Setting Unit	Default Setting	When Enabled
	1 to 1073741823	1 reference unit	6116694	Immediately
Pn528 (2528h)	Position Deviation Overflow Warning Level at Servo ON			Speed **Pos** Trq
	Setting Range	Setting Unit	Default Setting	When Enabled
	10 to 100	1%	100	Immediately

- Rotary Servomotors

Pn529 (2529h)	Speed Limit Level at Servo ON			Speed **Pos** Trq
	Setting Range	Setting Unit	Default Setting	When Enabled
	0 to 10000	1 min^{-1}	10000	Immediately

- Linear Servomotors

Pn584 (2584h)	Speed Limit Level at Servo ON			Speed **Pos** Trq
	Setting Range	Setting Unit	Default Setting	When Enabled
	0 to 10000	1 mm/s	10000	Immediately

(2) Related Alarms

Alarm Number	Alarm Name	Alarm Meaning
A.d01	Position Deviation Overflow Alarm at Servo ON	The servo was turned ON after the position deviation exceeded the setting of Pn526 (Position Deviation Overflow Alarm Level at Servo ON) while the servo was OFF.
A.d02	Position Deviation Overflow Alarm for Speed Limit at Servo ON	If position deviation remains in the deviation counter, the setting of Pn529 or Pn584 (Speed Limit Level at Servo ON) limits the speed when the servo is turned ON. This alarm occurs if position reference is input and the setting of Pn520 (Position Deviation Overflow Alarm Level) is exceeded before the limit is cleared.

Refer to the following section for information on troubleshooting alarms.

☞ *16.2.3 Alarm Reset on page 730*

(3) Related Warnings

Warning Number	Warning Name	Warning Meaning
A.901	Position Deviation Overflow Alarm at Servo ON	The position deviation when the servo was turned ON exceeded the percentage set with the following formula: (Pn526 × Pn528/100)

8.4 Tuning-less Function

The tuning-less function performs autotuning to obtain a stable response regardless of the type of machine or changes in the load. Autotuning is started when the servo is turned ON.

⚠ CAUTION

To ensure safety, make sure that you can perform an emergency stop at any time when you change the tuning-less level and change the tuning-less type.

Important

The servomotor may vibrate if it exceeds the allowable load moment of inertia. If that occurs, set Pn170 to n.2□□□ (set the load level for the tuning-less function to 2) or reduce the setting of Pn170 = n.□X□□ (Rigidity Level).

Information

- The tuning-less function is disabled during torque control.
- The servomotor may momentarily emit a sound or vibrate the first time the servo is turned ON after the servomotor is connected to the machine. This sound is caused by setting the automatic notch filter. It does not indicate a problem. Depending on the mechanism, the automatic notch filter may not be set to an appropriate frequency. If this sound or vibration continues, set Pn460 to n.□0□□ (do not adjust automatically) and manually set a function to suppress vibration (e.g., a notch filter). Refer to the following section for the settings of functions that are automatically adjusted.
  ☞ *8.4.5 Automatically Adjusted Function Setting on page 347*

8.4.1 Application Restrictions

The following application restrictions apply to the tuning-less function.

Function	Executable? *1	Remarks
Vibration Detection Level Initialization	○	–
Moment of Inertia Estimation	×	Set Pn170 to n.□□□0 (disable the tuning-less function) before you execute moment of inertia estimation.
Autotuning without a Host Reference	×	Set Pn170 to n.□□□0 (disable the tuning-less function) before you execute autotuning without a host reference. *2
Autotuning with a Host Reference	×	–
Custom Tuning	×	–
Anti-Resonance Control Adjustment	×	–
Vibration Suppression	×	–
Load Fluctuation Compensation	×	Set Pn170 to n.□□□0 (disable the tuning-less function), turn the power OFF and then ON again, and then set Pn173 to n.□□□1 (enable load fluctuation compensation).
Less-Deviation Control Function	×	Set Pn170 to n.□□□0 (disable the tuning-less function), turn the power OFF and then ON again, and then set Pn190 to n.□□□1 (use less-deviation control function).
EasyFFT	○	The tuning-less function is disabled while you execute Easy FFT and then it is enabled when Easy FFT has been completed.
Friction Compensation	×	–
Gain Switching	×	–
Mechanical Analysis	○	The tuning-less function is disabled while you execute mechanical analysis and then it is enabled when mechanical analysis has been completed.
Low-Frequency Control Function	×	Set Pn170 to n.□□□0 (disable the tuning-less function), and immediately after changing, set Pn183 to n.□□□1 (use low-frequency control function).

*1 ○: Yes ×: No

*2 To execute this function from the digital operator, set Jcalc = ON (estimate moment of inertia) [default setting] on the Fn201 (Advanced Autotuning without Reference) setting display of the digital operator when Pn170 = n.□□□1 (enable the tuning-less function) [default setting], and then autotuning without a host reference can be executed.
Refer to the following manual for the operating procedures for the digital operator.
Σ-7/Σ-X-Series Digital Operator Operating Manual (Manual No.: SIEP S800001 33)

8.4.2 Operating Procedure

The tuning-less function is enabled in the default settings. No specific procedure is required. You can use the following parameter to enable or disable the tuning-less function.

		Tuning-less Selection (Speed / Pos / Trq)		When Enabled
Pn170 (2170h)	n.□□□X	0	Disable tuning-less function.	After restart
		1 Default	Enable tuning-less function.	
		Speed Control Method (Speed / Pos / Trq)		**When Enabled**
Pn170 (2170h)	n.□□X□	0 Default	Use for speed control.	After restart
		1	Use for speed control and use host controller for position control.	

When you enable the tuning-less function, you can select the tuning-less type.

Normally, set Pn14F to n.□□3□ (use tuning-less type 4) (default setting). If you set Pn14F to n.□□3□, load level correction will be switched automatically.

If you require compatibility with previous products, use one of the following settings.

- Pn14F= n.□□0□ (use tuning-less type 1)
- Pn14F= n.□□1□ (use tuning-less type 2)
- Pn14F= n.□□2□ (use tuning-less type 3)

If you set the parameter to one of the above settings, load level correction will not be switched automatically.

Information Automatic switching of load level correction is used to automatically switch Pn170 = n.X□□□ (Tuning-less Load Level) according to the load. Automatic switching of load level correction is used to execute tuning automatically so that the SERVOPACK can handle a load up to 100-times that of the normal load.

		Tuning-less Type Selection (Speed / Pos / Trq)		When Enabled
Pn14F (214Fh)	n.□□X□	0	Use tuning-less type 1.	After restart
		1	Use tuning-less type 2.	
		2	Use tuning-less type 3.	
		3 Default	Use tuning-less type 4.	

(1) Tuning-less Level Settings

If vibration or other problems occur, change the tuning-less levels. To change the tuning-less levels, use the SigmaWin+.

(a) Preparations

Always check the following before you set the tuning-less levels.

- Pn170 must be set to n.□□□1 (Tuning-less Selection is enabled).
- Pn00C must be set to n.□□□0 (Function Selection for Test without a Motor is disabled).
- The servomotor must be connected to the machine.

(b) Procedure

Use the following procedure to set the tuning-less levels.

Information This section gives the procedure using the SigmaWin+, but the tuning-less levels can also be set with parameters. Refer to the following sections for details on the parameters to set.

☞ *(c) Related Parameters on page 345*

1. **Click the [ ] button for the servo drive in the workspace of the Main Window of the SigmaWin+.**
2. **Select [Response Level Setting] in the [Menu] window.**

   The [Turning-less Level Setting-Adj] window will be displayed.
3. **Click the [▲] or [▼] button to adjust the turning-less level setting. Increase the turning-less level setting to increase the response. Decrease the turning-less level setting to suppress vibration.**

   The default response level setting is 4.

Tuning-less Rigidity Level	Description	Remarks
7	Response level: High	These levels cannot be selected if Pn14F is set to n.□□0□ or n.□□1□ (use tuning-less type 1 or 2).
6	↓	
5		
4 (default setting)		–
3		
2		
1		
0	Response level: Low	

4. **Click the [Completed] button.**

   The adjustment results will be saved in the SERVOPACK.

Important If the servomotor will be removed from the machine, always reset the tuning-less levels back to the default settings. If you turn ON the servo when the servomotor has been removed from the machine without resetting the default settings, there is a risk of servomotor vibration.

(c) Related Parameters

◆ Tuning-less Rigidity Level

If Pn14F is set to n.□□0□ or n.□□1□ (use tuning-less type 1 or 2), set Pn170 to n.□0□□ to n.□4□□ (tuning-less level 0 to 4). Do not set Pn170 to n.□5□□ to n.□7□□ (tuning-less level 5 to 7).

Information Tuning-less level 0 is the lowest response level, and then levels increase up to the largest response level at tuning-less level 7.

		Tuning-less Level (Speed Pos Trq)		When Enabled
Pn170 (2170h)	n.□X□□	0	Set the tuning-less level to 0.	Immediately
		1	Set the tuning-less level to 1.	
		2	Set the tuning-less level to 2.	
		3	Set the tuning-less level to 3.	
		4 Default	Set the tuning-less level to 4.	
		5	Set the tuning-less level to 5.	
		6	Set the tuning-less level to 6.	
		7	Set the tuning-less level to 7.	

◆ Tuning-less Load Level

		Tuning-less Load Level		Speed Pos Trq	When Enabled
Pn170 (2170h)	n.X□□□	0	Set the tuning-less load level to 0.		Immediately
		1 Default	Set the tuning-less load level to 1.		
		2	Set the tuning-less load level to 2.		

8.4.3 Troubleshooting Alarms

An A.521 alarm (Autotuning Alarm) will occur if a resonant sound occurs or if excessive vibration occurs during position control. If an alarm occurs, implement the following measures.

- Resonant Sound
  Decrease the setting of Pn170 = n.X□□□ or Pn170 = n.□X□□.
- Excessive Vibration during Position Control
  Increase the setting of Pn170 = n.X□□□ or decrease the setting of Pn170 = n.□X□□.

8.4.4 Parameters Disabled by Tuning-less Function

When Pn170 is set to n.□□□1 (the tuning-less function is enabled) (default setting), the parameters in the following table are disabled.

Parameter Name	Parameter Number
Speed Loop Gain Second Speed Loop Gain Third Speed Loop Gain Fourth Speed Loop Gain	Pn100 (2100h) Pn104 (2104h) Pn12B (212Bh) Pn12E (212Eh)
Speed Loop Integral Time Constant Second Speed Loop Integral Time Constant Third Speed Loop Integral Time Constant Fourth Speed Loop Integral Time Constant	Pn101 (2101h) Pn105 (2105h) Pn12C (212Ch) Pn12F (212Fh)
Position Loop Gain Second Position Loop Gain Third Position Loop Gain Fourth Position Loop Gain	Pn102 (2102h) Pn106 (2106h) Pn12D (212Dh) Pn130 (2130h)
Moment of Inertia Ratio	Pn103 (2103h)
Friction Compensation Function Selection	Pn408 (2408h) = n.X□□□
Anti-Resonance Control Selection	Pn160 (2160h) = n.□□□X
Less-Deviation Control-Related Selections	Pn190 (2190h) = n.□□□X
Gain Switching Selection	Pn139 (2139h) = n.□□□X
Low-Frequency Control Function Selections	Pn183 (2183h) = n.□□□X

The tuning-less function is disabled during torque control, Easy FFT, and mechanical analysis for a vertical axis. In addition, Pn100, Pn104, Pn101, Pn105, Pn102, Pn106, and Pn103 in the above table are enabled for torque control, Easy FFT, and mechanical analysis for a vertical axis. Of these, only Pn100, Pn103, and Pn104 are enabled for torque control.

8.4.5 Automatically Adjusted Function Setting

You can also automatically adjust notch filters.

Normally, set Pn460 to n.□1□□ (adjust automatically) (default setting). Vibration is automatically detected and a notch filter is set.

Set Pn460 to n.□0□□ (do not adjust automatically) only if you do not change the setting of the notch filter before you execute this function.

		Notch Filter Adjustment Selection 2 Speed Pos Trq		When Enabled
Pn460 (2460h)	n.□X□□	0	Do not adjust the second stage notch filter automatically when the tuning-less function is enabled or during execution of autotuning without a host reference, autotuning with a host reference, and custom tuning.	Immediately
		1 Default	Adjust the second stage notch filter automatically when the tuning-less function is enabled or during execution of autotuning without a host reference, autotuning with a host reference, and custom tuning.	

8.4.6 Related Parameters

The following parameters are automatically adjusted when you execute the tuning-less function.

Do not manually change the settings of these parameters after you have enabled the tuning-less function.

Parameter	Name
Pn401 (2401h)	First Stage First Torque Reference Filter Time Constant
Pn40A (240Ah)	First Stage Notch Filter Q Value
Pn40C (240Ch)	Second Stage Notch Filter Frequency
Pn40D (240Dh)	Second Stage Notch Filter Q Value

8.5 Moment of Inertia Estimation without a Host Reference

This section describes how the moment of inertia without a host reference is calculated.

The moment of inertia ratio that is calculated here is used in other tuning functions. You can also estimate the moment of inertia during autotuning without a host reference. Refer to the following section for the procedure.

☞ *8.7.4 Operating Procedure on page 371*

8.5.1 Outline

The moment of inertia during operation is automatically calculated by the SERVOPACK for round-trip operation. A reference from the host controller is not used.

The moment of inertia ratio (i.e., the ratio of the load moment of inertia to the motor moment of inertia) is a basic parameter for adjusting gains. It must be set as accurately as possible.

Although the load moment of inertia can be calculated from the weight and structure of the mechanisms, doing so is very troublesome and calculating it accurately can be very difficult with the complex mechanical structures that are used these days. With this function, you can estimate load moment of inertia with good accuracy.

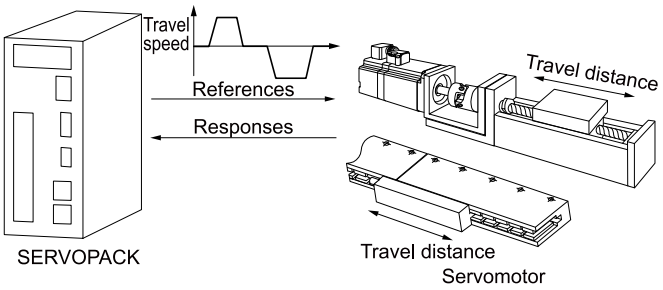

Note:

Execute this function after jogging to a position that ensures a suitable range of motion.

Information When this function is being executed, the Less-Deviation Control Function is disabled.

8.5.2 Restrictions

The following restrictions apply to estimating the moment of inertia without a host reference.

(1) Systems for which Execution Cannot Be Performed

- When the machine system can move only in one direction
- When the range of motion is greater than 0.25 rotations and less than or equal to 0.5 rotations

(2) Systems for Which Adjustments Cannot Be Made Accurately

- When a suitable range of motion is not possible
- When the moment of inertia changes within the set operating range
- When the machine has high dynamic friction
- When the rigidity of the machine is low and vibration occurs when positioning is performed
- When the position integration function is used
- When P control is used
- When mode switching is used

  Note:

  If you specify moment of inertia estimation, mode switching will be disabled and PI control will be used while the moment of inertia is being calculated. Mode switching will be enabled after moment of inertia estimation has been completed.
- When speed feedforward or torque feedforward is input

(3) Preparations

Always check the following before you execute moment of inertia estimation without a host reference.

- The main circuit power must be ON.
- There must be no overtravel.
- The servo must be OFF.
- The control method must not be set to torque control.
- The gain 1 must be selected.
- Pn00C must be set to n.□□□0 (Function Selection for Test without a Motor is disabled).
- Pn170 must be set to n.□□□0 (tuning-less function is disabled).
- Pn173 must be set to n.□□□0 (a load fluctuation compensation control is disabled).
- There must be no alarms or warnings.
- There must be no hard wire base block (HWBB).
- The parameters must not be write prohibited.

8.5.3 Applicable Tools

The following table lists the tools that you can use to estimate the moment of inertia without a host reference.

Tool	Fn No./Function Name	Operating Procedure Reference
Digital Operator	You cannot estimate the moment of inertia without a host reference from the digital operator.	
SigmaWin+	[Tuning] - [Tuning]	☞ *8.5.4 Operating Procedure on page 349*

8.5.4 Operating Procedure

⚠ WARNING

Moment of inertia estimation is a measurement function that actually drives the machine and therefore presents hazards. Observe the following precautions.

- **Confirm safety around moving parts.**
- **This function involves automatic reciprocating operation. Make sure that you can perform an emergency stop (to turn OFF the power supply) at any time.**
- **There will be movement in both directions within the set range of movement. Check the range of movement and the directions and implement protective measures for safety, such as the overtravel functions.**

Important

The stopping method if you cancel the moment of inertia estimation without a host reference is given below.

- If you cancel operation with the [Servo OFF] button, the servomotor will stop according to the setting of Pn001 = n.□□□X (Motor Stopping Method for Servo OFF).
- If you cancel operation with the [Cancel] button, the servomotor will decelerate to a stop and then enter a zero-clamped state.

Use the following procedure to estimate the moment of inertia without a host reference.

1. **Click the [ ] button for the servo drive in the workspace of the Main Window of the SigmaWin+.**

   The [Menu] window will be displayed.

2. **Click [Tuning] in the [Tuning] area.**

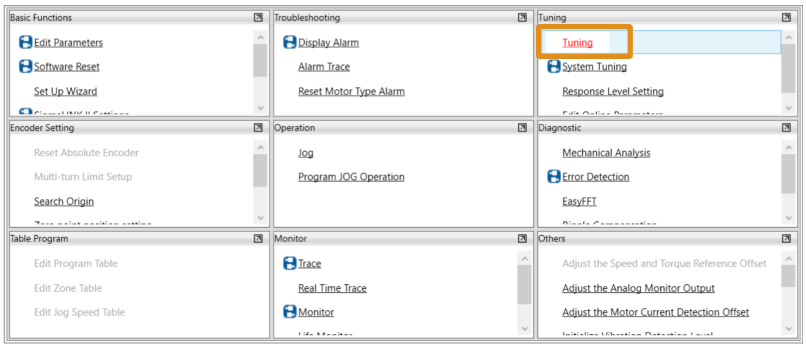

The [Tuning] window will be displayed.

3. **Read the warnings and then click the [Execute] button.**

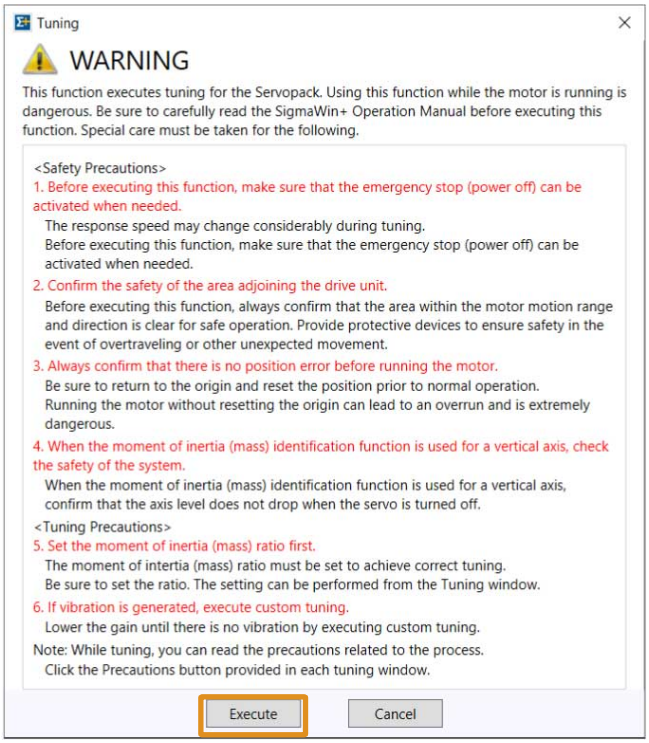

The [Tuning] window will be displayed.

4. **Under [Reference input from host controller], select [No Reference Input], and then click the [Execute] button.**

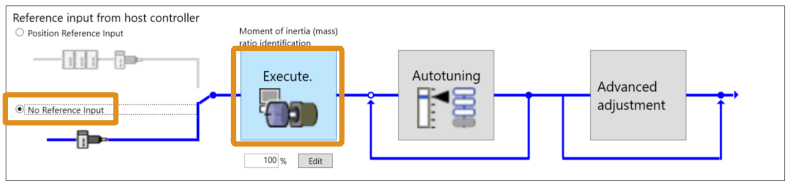

The [Condition Setting] window will be displayed.

5. **Set the conditions as required.**

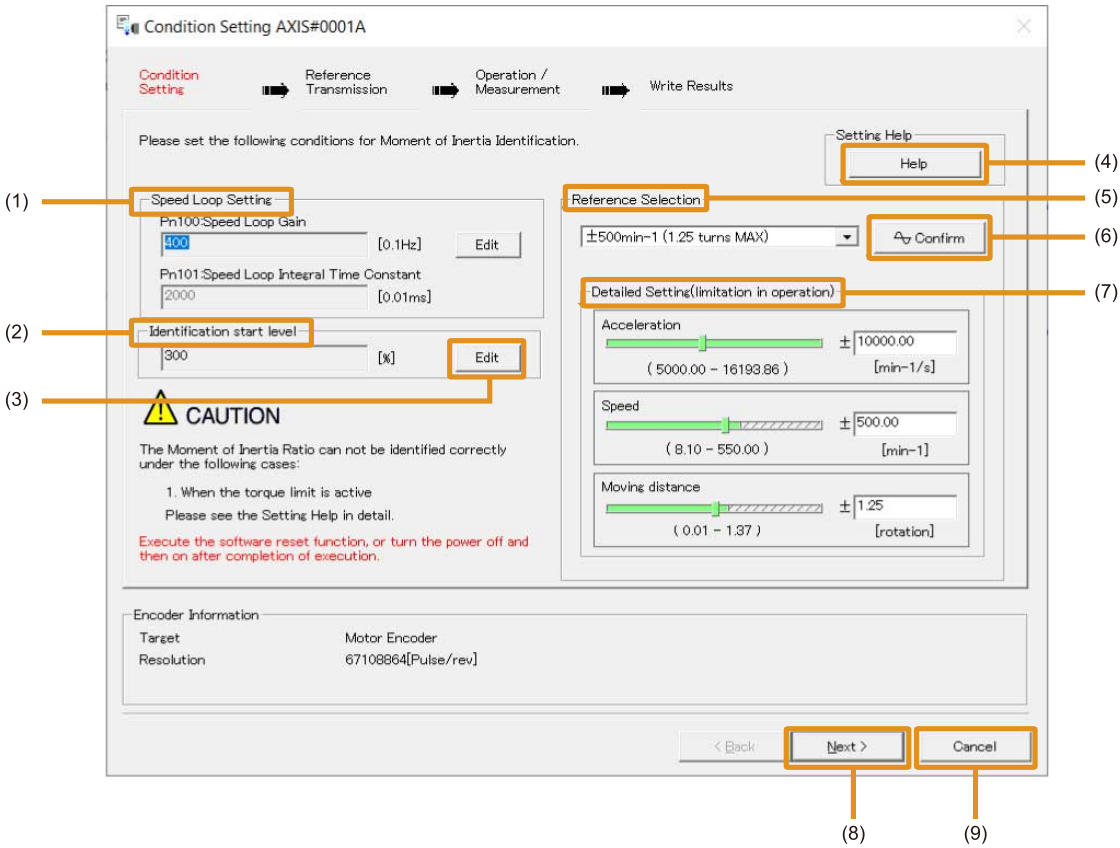

No.	Item	Meaning
(1)	[Speed Loop Setting]	Make the speed loop settings in this area. If the speed loop response is too bad, it will not be possible to measure the moment of inertia ratio accurately. A suitable value is set to perform the moment of inertia estimation. It is normally not necessary to change these settings. If the default speed loop gain is too high for the machine (i.e., if vibration occurs), lower the setting. It is not necessary to increase the setting any farther.
(2)	[Identification start level]	This is the setting of the moment of inertia calculation starting level. If the load is large or the machine has low rigidity, the torque limit may be applied, causing moment of inertia estimation to fail. If that occurs, estimation may be possible if you double the setting of the start level.
(3)	[Edit] button	Click the button to display a window to change the settings related to the speed loop or estimation start level.
(4)	[Help] button	Click this button to display guidelines for setting the reference conditions. Make the following settings as required. • Operate the servomotor to measure the load moment of inertia of the machine in comparison with the rotor moment of inertia. • Set the operation mode, reference pattern (maximum acceleration rate, maximum speed, and maximum travel distance), and speed loop-related parameters. • Correct measurement of the moment of inertia ratio may not be possible depending on the settings. Set suitable settings using the measurement results as reference.
(5)	[Reference Selection]	Either select the reference pattern for estimation processing from the box, or set the values in the [Detailed Setting]. Generally speaking, the larger the maximum acceleration rate is, the more accurate the moment of inertia estimation will be. Set the maximum acceleration range within the possible range of movement considering the gear ratio, e.g., the pulley diameters or ball screw pitch.

Continued on next page.

Continued from previous page.

No.	Item	Meaning
(6)	[Confirm] button	Click this button to display the [Reference Confirmation] window. 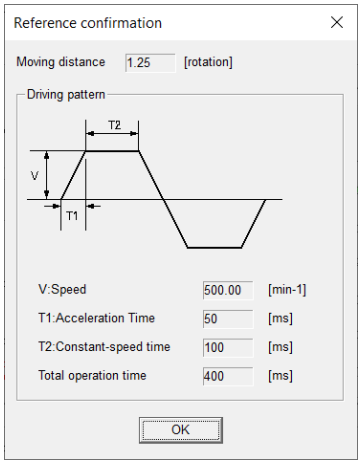
(7)	[Detailed Setting]	You can change the settings by moving the bars or directly inputting the settings to create the required reference pattern.
(8)	[Next] button	Click this button to display the [Reference Transmission] window.
(9)	[Cancel] button	Click this button to return to the [Tuning] window.

Important

- The travel distance is the distance for one operation in the forward or reverse direction. During multiple operations, the operation starting position may move in one direction or the other. Confirm the possible operating range for each measurement or operation.
- Depending on the parameter settings and the moment of inertia of the machine, overshooting may occur and may cause the maximum speed setting to be exceeded temporarily. Allow sufficient leeway in the settings.

Information **When Measurement Is Not Correct**

Estimating the moment of inertia ratio cannot be performed correctly if the torque limit is activated. Adjust the limits or reduce the acceleration rate in the reference selection so that the torque limit is not activated.

6. Click the [Next] button.

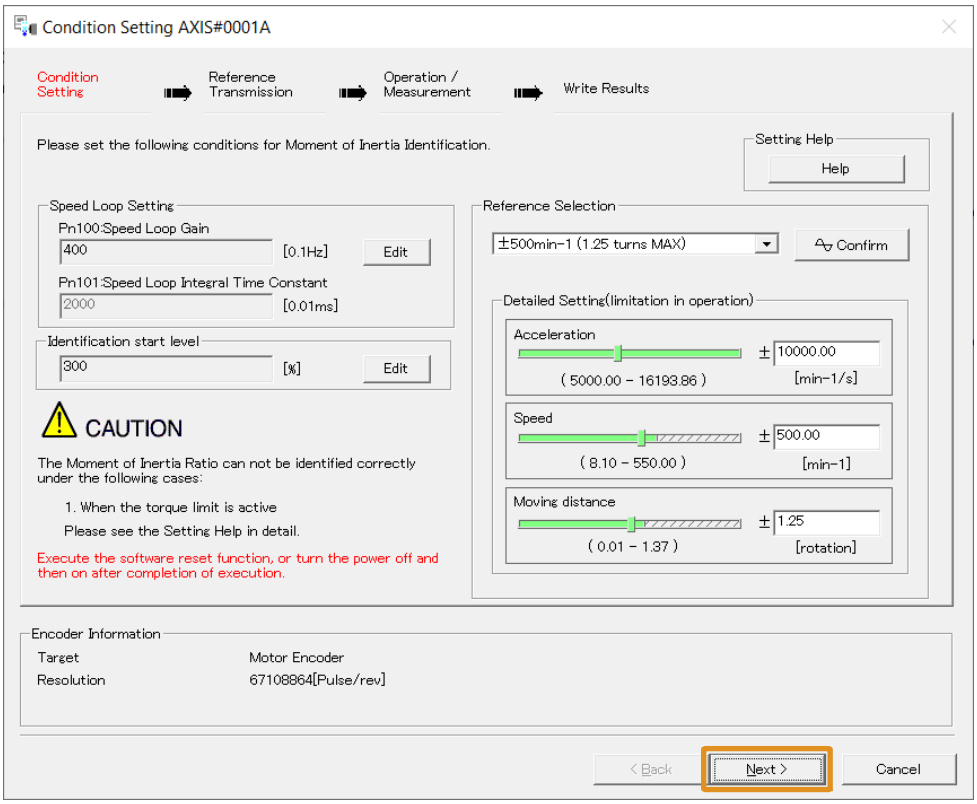

The procedure after this step depends on the travel distance. If any of the following apply, proceed to the next step.

- The travel distance of a rotary servomotor is 0.25 rotations or more.
- The travel distance of a direct drive servomotors is 0.04 rotations or more.
- The travel distance of a linear servomotor is 2.5 mm or more.

If none of the above apply, refer to the following section.

☞ *(1) Moment of Inertia Estimation without a Host Reference When Travel Distance Is Short on page 359*

7. **Click the [Start] button.**

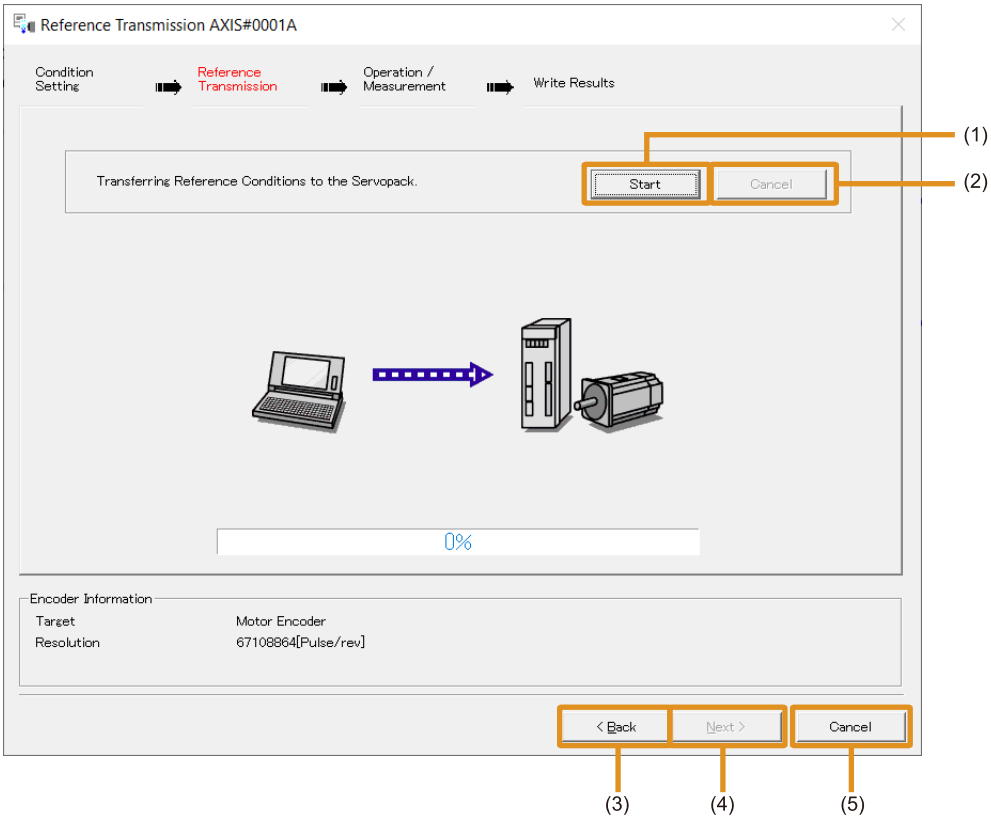

No.	Item	Meaning
(1)	[Start] button	The reference conditions will be transferred to the SERVOPACK. A progress bar will show the progress of the transfer.
(2)	[Cancel] button	The [Cancel] button is enabled only while data is being transferred to the SERVOPACK. You cannot use it after the transfer has been completed.
(3)	[Back] button	This button returns you to the [Condition Setting] window. It is disabled while data is being transferred.
(4)	[Next] button	This button is enabled only when the data has been transferred correctly. You cannot use it if an error occurs or if you cancel the transfer before it is completed. Click the [Next] button to display the [Operation/Measurement] window.
(5)	[Cancel] button	This button cancels processing and returns you to the [Tuning] window.

8. **Click the [Next] button.**

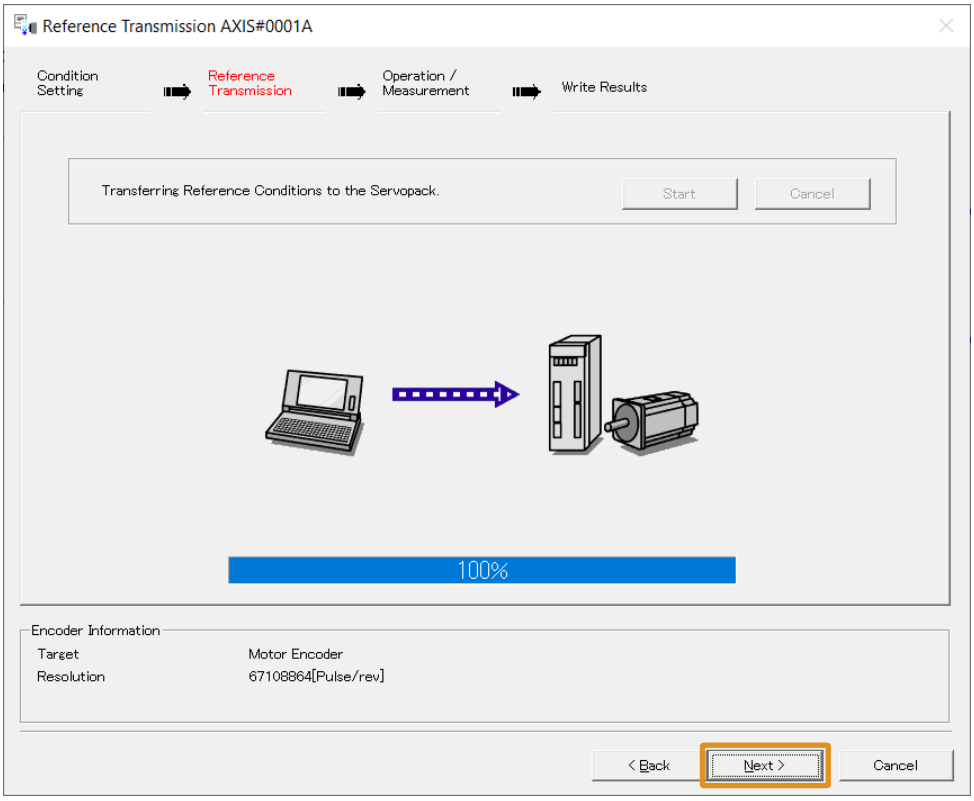

The [Operation/Measurement] window will be displayed.

9. **Click the [Servo On] button.**

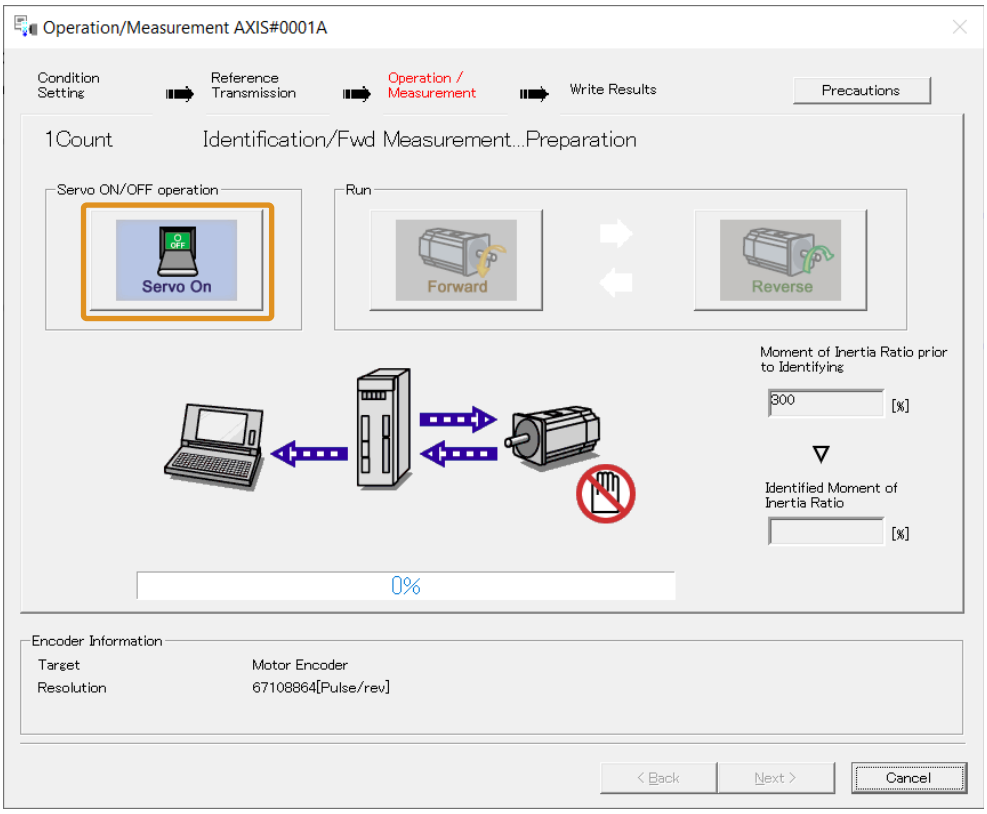

10. **Click the [Forward] button.**

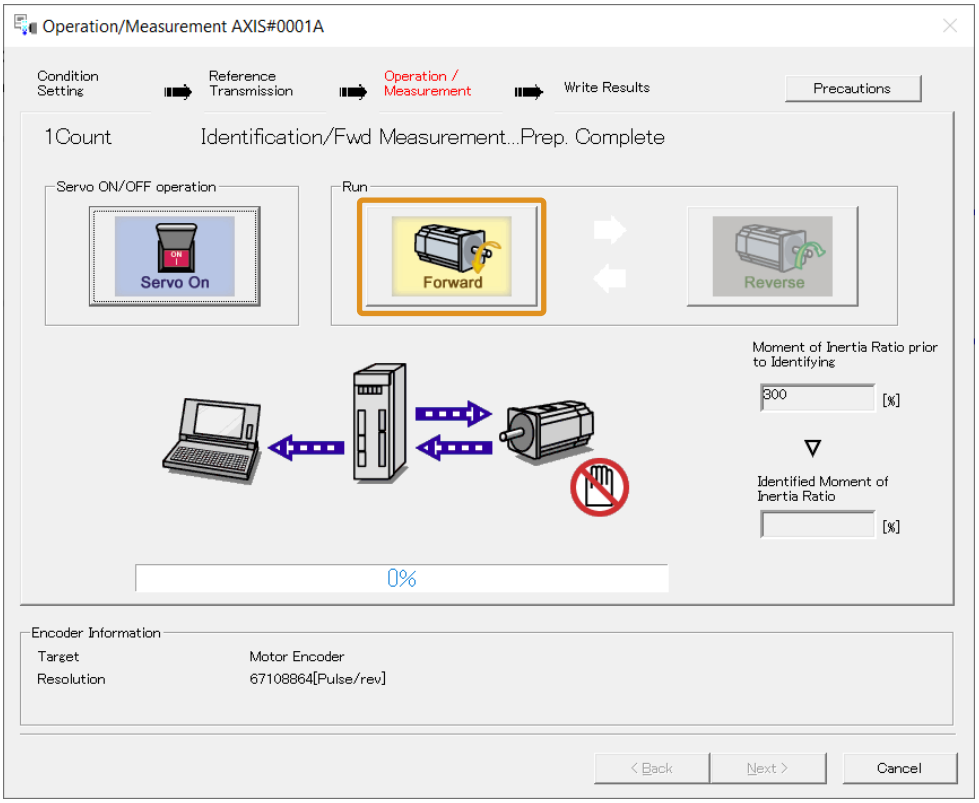

The servomotor shaft will rotate in the forward direction and the measurement will start. After the measurement and data transfer have been completed, the [Reverse] button will be displayed in color.

11. **Click the [Reverse] button.**

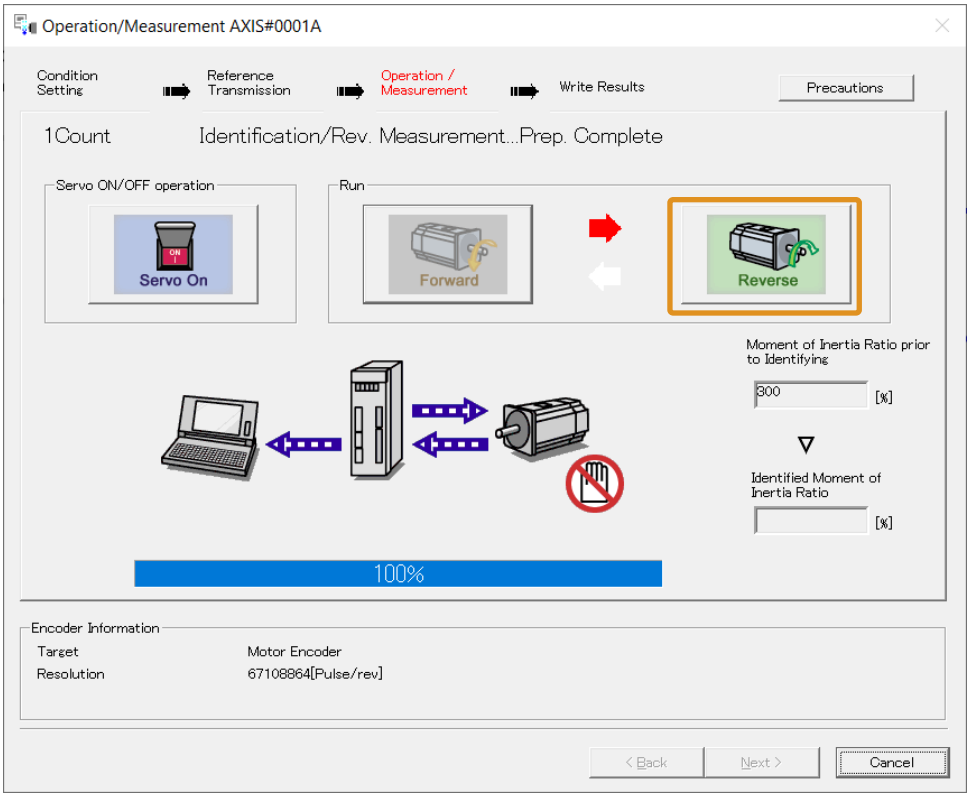

The servomotor shaft will rotate in the reverse direction and the measurement will start. After the measurement and data transfer have been completed, the [Forward] button will be displayed in color.

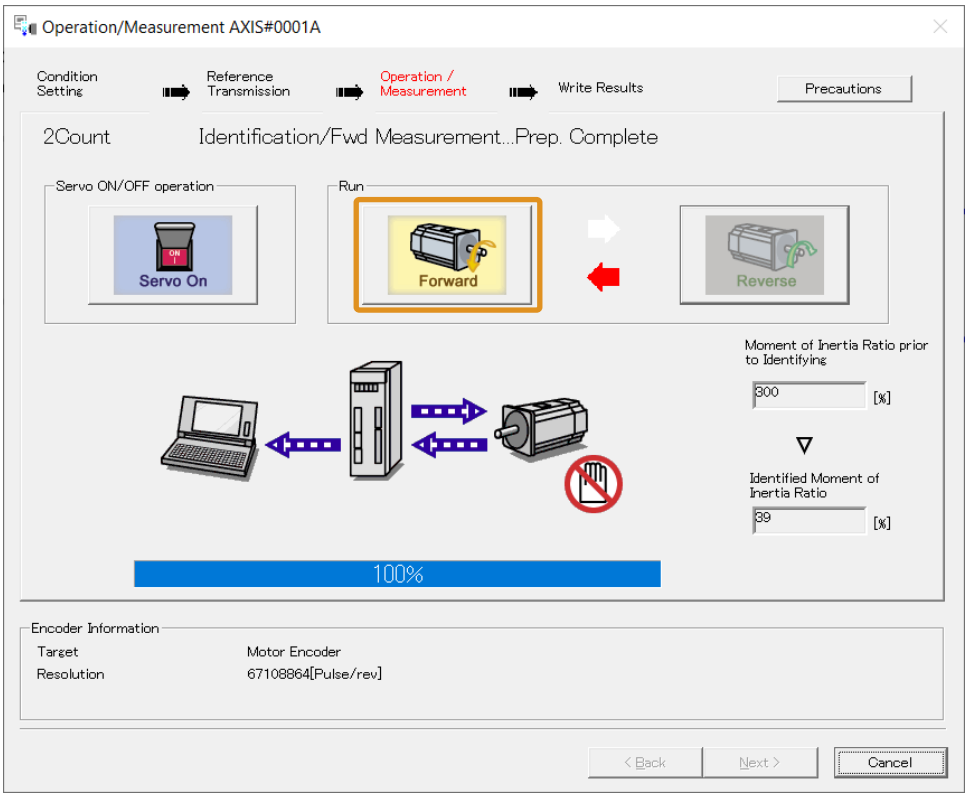

12. **Repeat steps 10 to 11 until the [Next] button is enabled.**

Measurements are performed from 2 to 7 times and then verified. The number of measurements is displayed in upper left corner of the window. A progress bar at the bottom of the window will show the progress of the transfer each time.

13. **When the measurements have been completed, click the [Servo On] button to turn OFF the servo.**

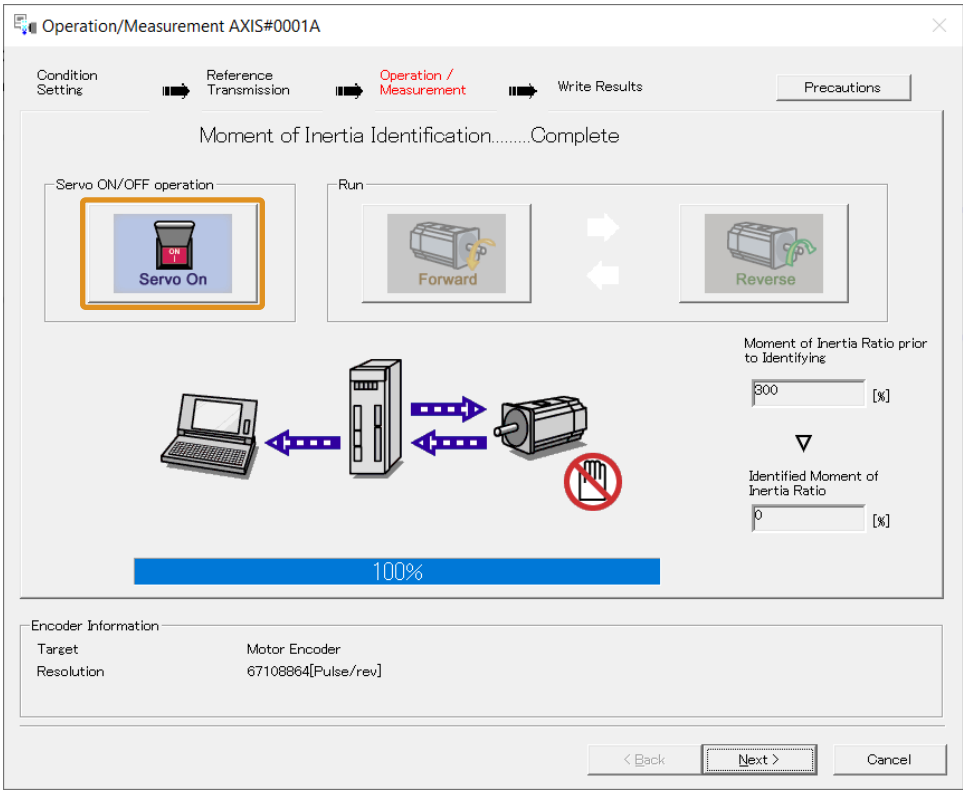

14. **Click the [Next] button.**

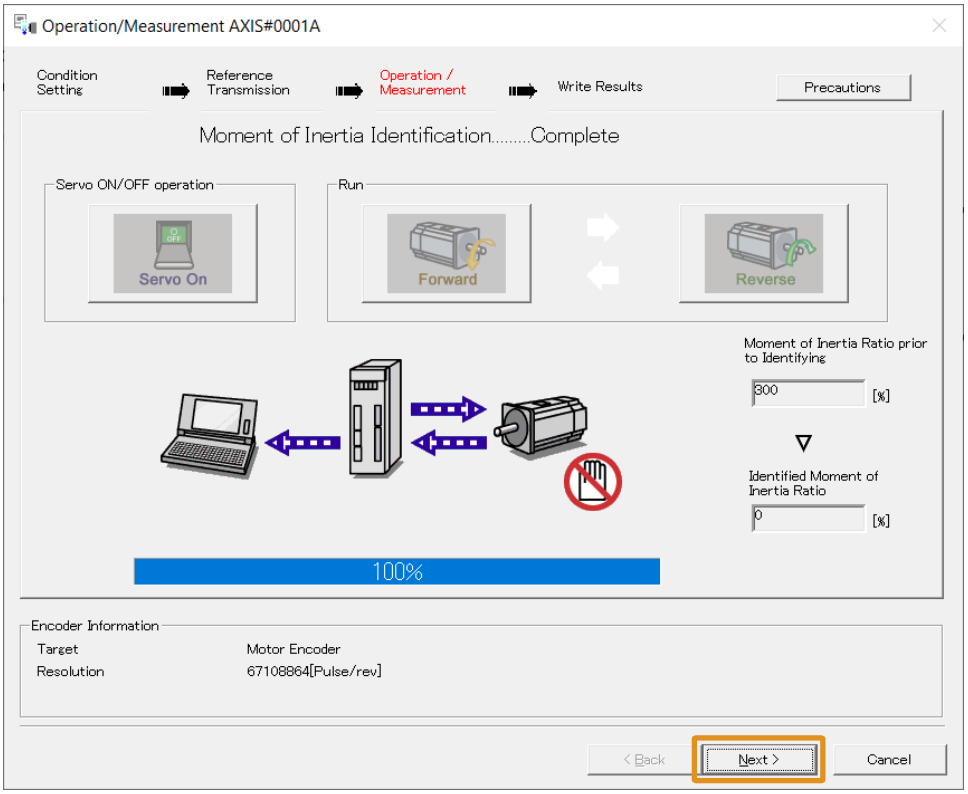

The [Write Results] window will be displayed.

Information

If you click the [Next] button before you turn OFF the servo, the following message dialog box will be displayed. Click the [OK] button to turn OFF the servo.

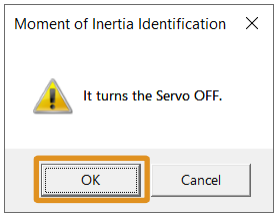

15. **Click the [Writing Results] button.**

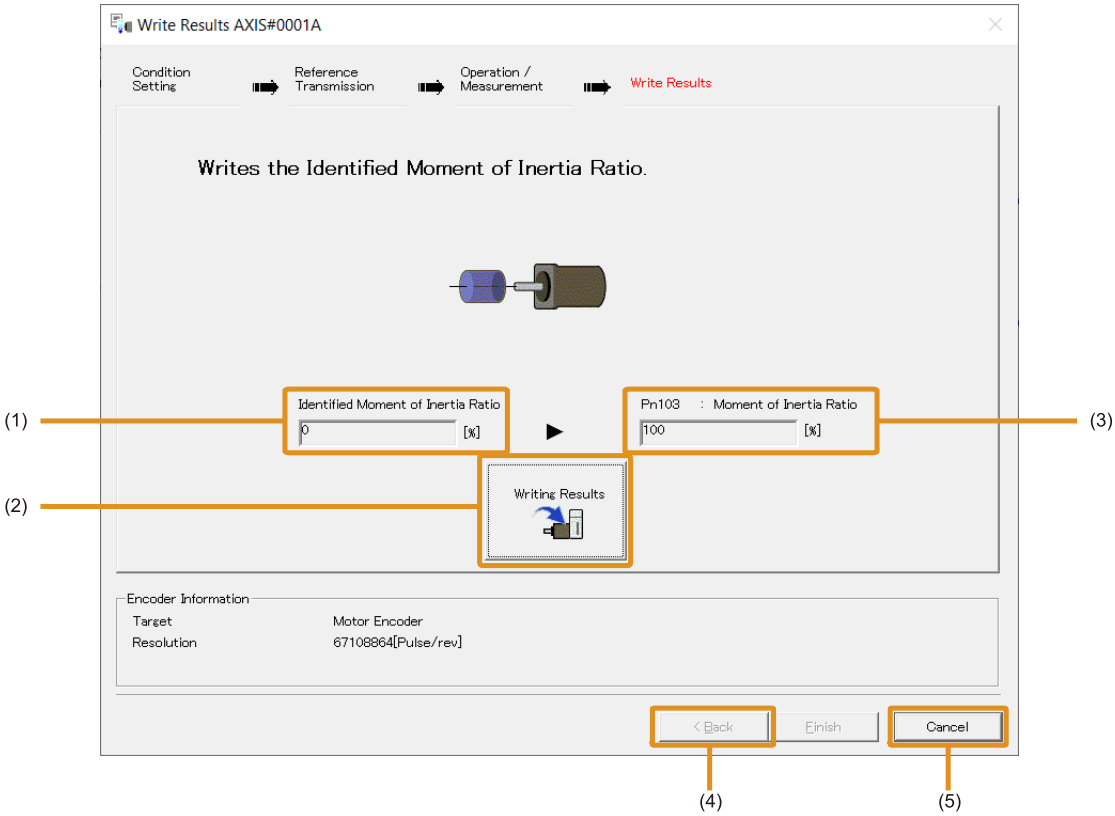

No.	Item	Meaning
(1)	[Identified Moment of Inertia Ratio]	The moment of inertia ratio that was found with operation and measurements is displayed here.
(2)	[Writing Results] button	If you click this button, Pn103 (Moment of Inertia Ratio) in the SERVOPACK is set to the value that is displayed for the identified moment of inertia ratio.
(3)	[Pn103: Moment of Inertia Ratio]	The value that is set for the parameter is displayed here. After you click the [Writing Results] button, the value that was found with operation and measurements will be displayed as the new setting.
(4)	[Back] button	This button is disabled.
(5)	[Cancel] button	You will return to the [Tuning] window.

16. **Confirm that the [Identified Moment of Inertia Ratio] and the [Pn103: Moment of Inertia Ratio] show the same value and then click the [Finish] button.**

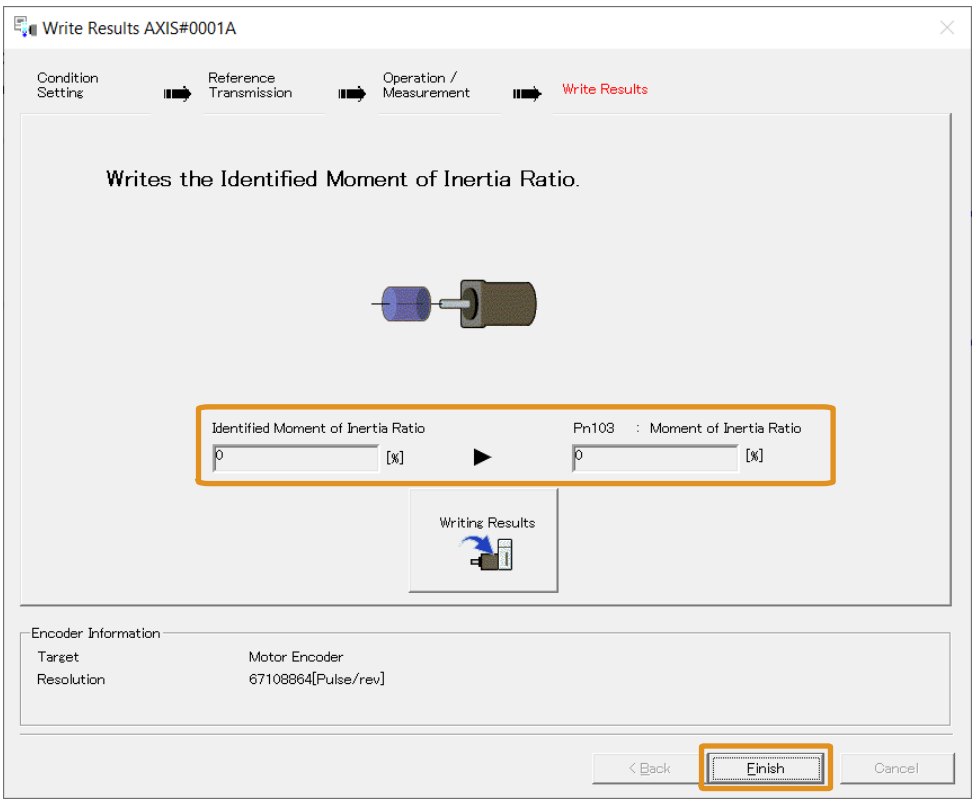

The message dialog box will be displayed.

17. **Click the [OK] button.**

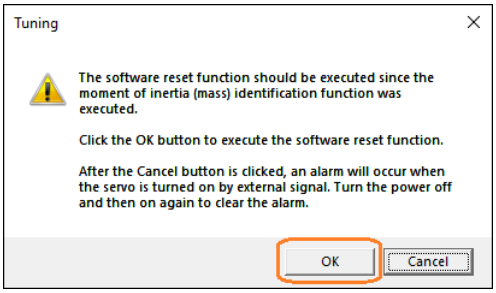

18. **Click the [OK] button.**

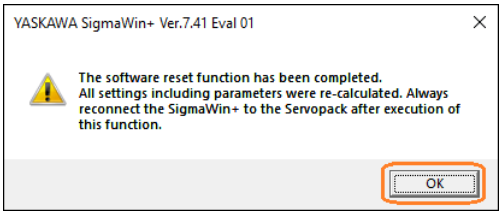

This concludes the procedure to estimate the moment of inertia without a host reference.

(1) Moment of Inertia Estimation without a Host Reference When Travel Distance Is Short

Use the following procedure to estimate the moment of inertia without a host reference when any of the following apply to the travel distance.

- The travel distance of a rotary servomotor is less than 0.25 rotations.
- The travel distance of a direct drive servomotors is less than 0.04 rotations.
- The travel distance of a linear servomotor is less than 2.5 mm.

Note:

This section does not contain the complete procedure to estimate moment of inertia without a host reference. Refer to the following section before using this procedure.

☞ *8.5.4 Operating Procedure on page 349*

1. **Click the [Yes] button.**

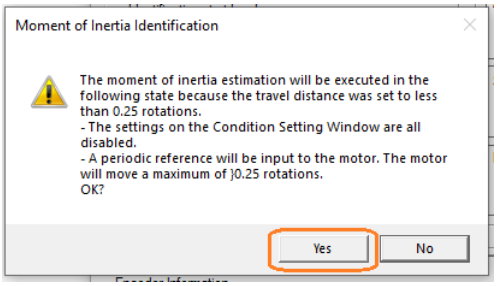

2. **Click the [Servo On] button.**

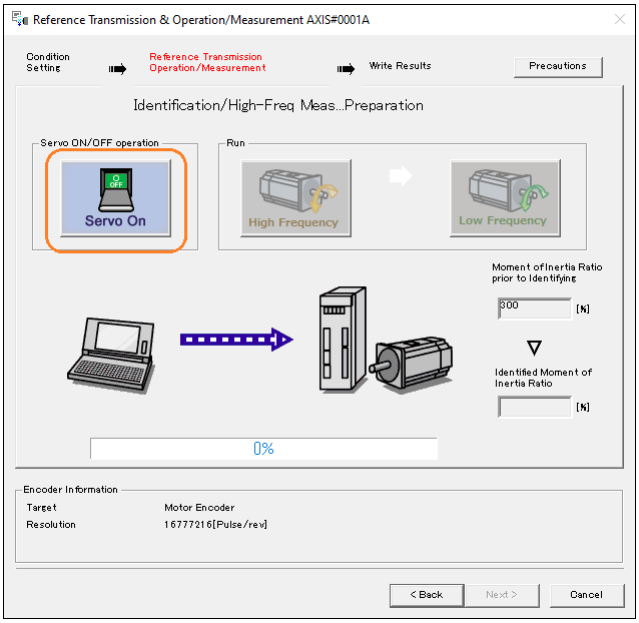

3. **Click the [High Frequency] button.**

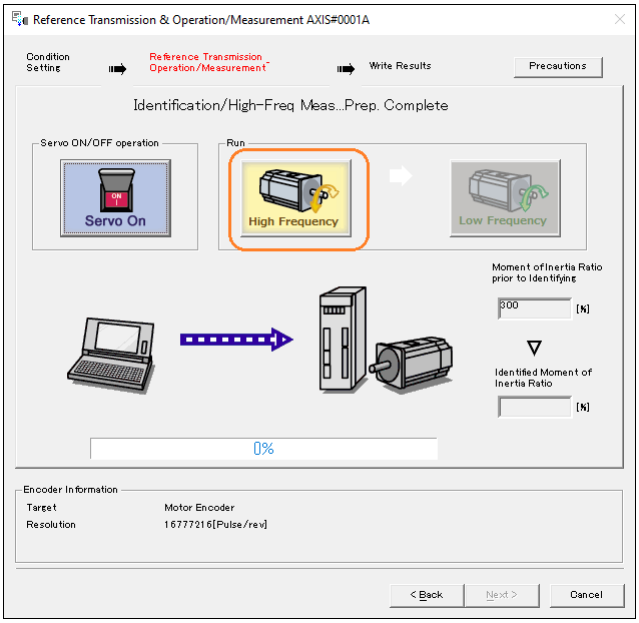

The servomotor shaft will rotate and measurements will start. After the measurement and data transfer have been completed, the [Low Frequency] button will be displayed in color.

Information
- The servomotor shaft will rotate only a maximum of 0.25 rotations (0.04 rotations for a direct drive servomotor) at one time.
- The servomotor may not operate as configured because it will operate at a constant frequency.
- Noise may occur during operation.

4. **Click the [Low Frequency] button.**

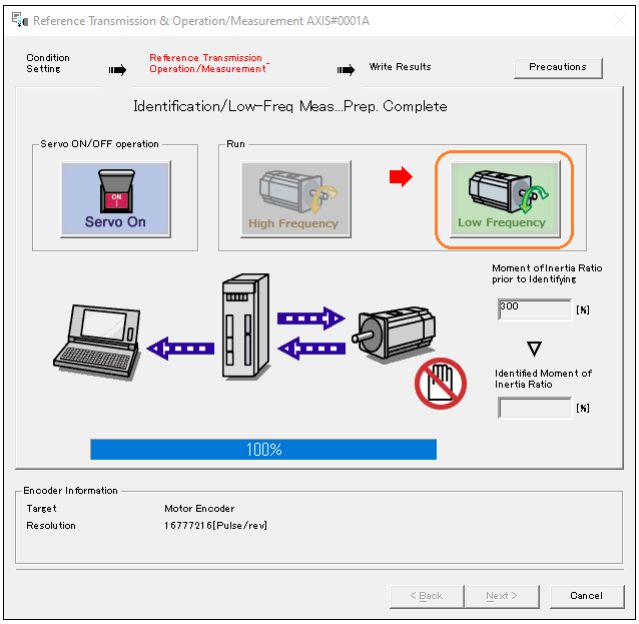

The servomotor shaft will rotate and measurements will start. After the measurement and data transfer have been completed, the [Next] button will be enabled.

Information
- The servomotor shaft will rotate only a maximum of 0.25 rotations (0.04 rotations for a direct drive servomotor) at one time.
- The servomotor may not operate as configured because it will operate at a constant frequency.
- Noise may occur during operation.

5. **When the measurements have been completed, click the [Servo On] button to turn OFF the servo.**

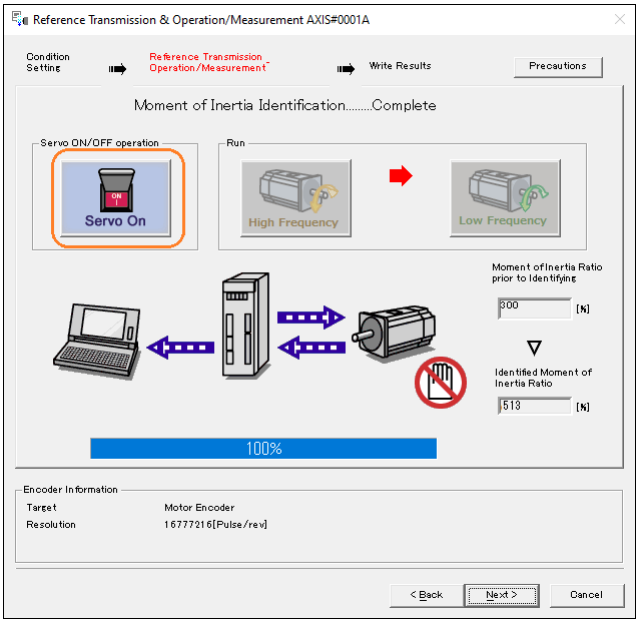

6. **Click the [Next] button.**

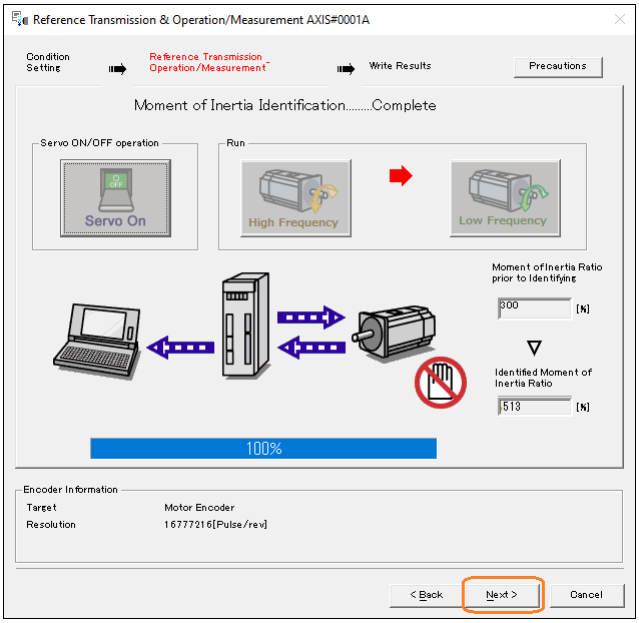

The [Write Results] window will be displayed.

Information

If you click the [Next] button before you turn OFF the servo, the following message dialog box will be displayed. Click the [OK] button to turn OFF the servo.

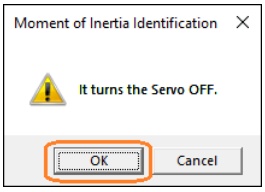

7. **Click the [Writing Results] button.**

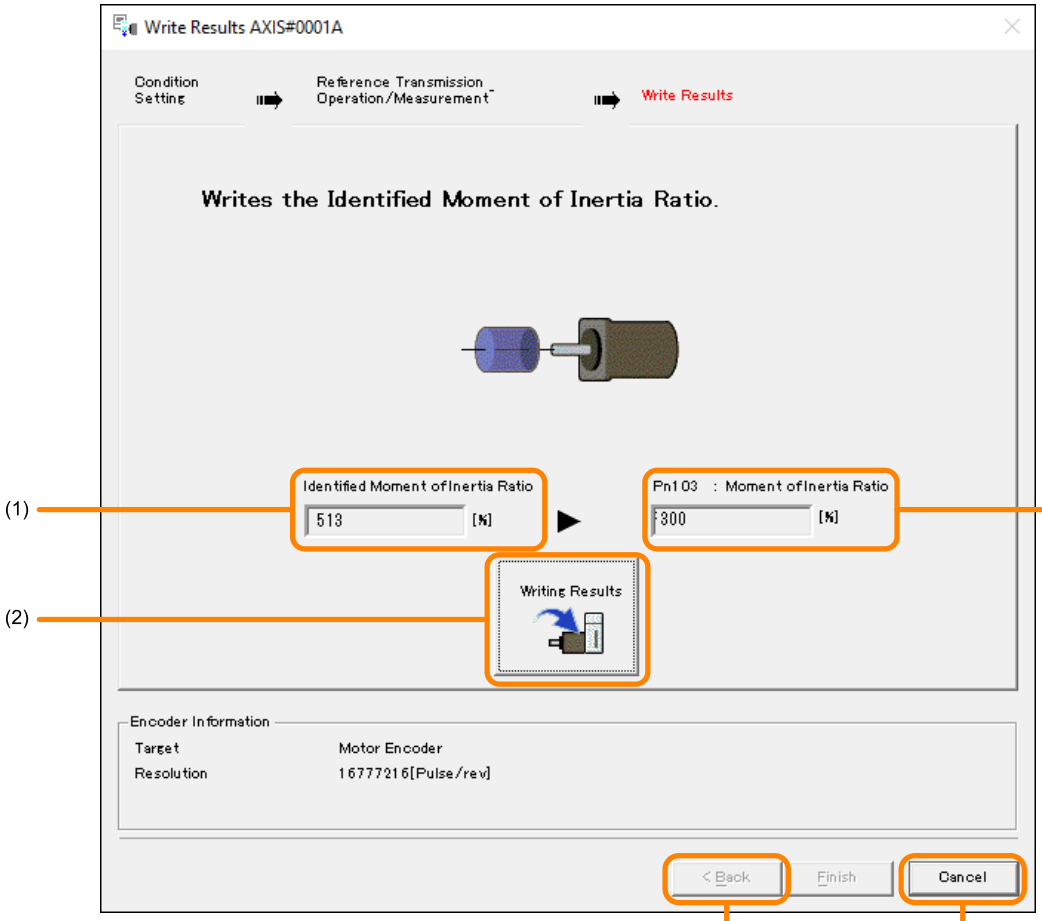

No.	Item	Meaning
(1)	[Identified Moment of Inertia Ratio]	The moment of inertia ratio that was found with operation and measurements is displayed here.
(2)	[Writing Results] button	If you click this button, Pn103 (Moment of Inertia Ratio) in the SERVOPACK is set to the value that is displayed for the identified moment of inertia ratio.
(3)	[Pn103: Moment of Inertia Ratio]	The value that is set for the parameter is displayed here. After you click the [Writing Results] button, the value that was found with operation and measurements will be displayed as the new setting.
(4)	[Back] button	This button is disabled.
(5)	[Cancel] button	You will return to the [Tuning] window.

8. **Confirm that the [Identified Moment of Inertia Ratio] and the [Pn103: Moment of Inertia Ratio] show the same value and then click the [Finish] button.**

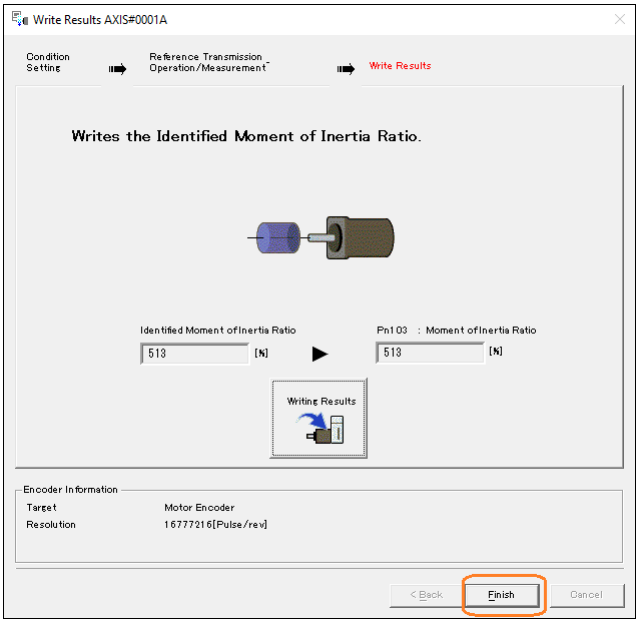

The message dialog box will be displayed.

9. **Click the [OK] button.**

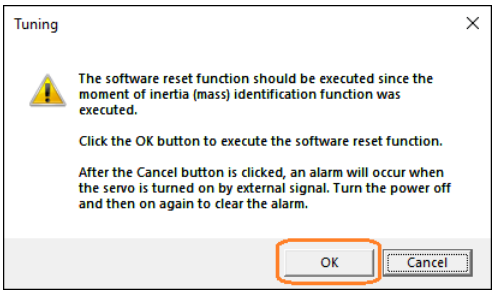

10. **Click the [OK] button.**

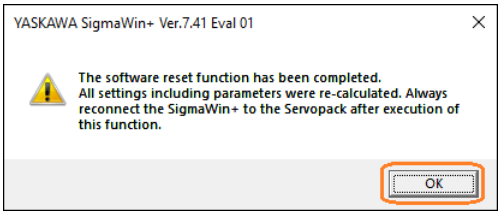

This concludes the procedure to estimate the moment of inertia ratio without a host reference when the travel distance is short.

8.6 Moment of Inertia Estimation with a Host Reference

This section describes how the moment of inertia with a host reference is calculated.

The moment of inertia ratio that is calculated here is used in other tuning functions.

8.6.1 Outline

The load moment of inertia is estimated from operation by reference (position control) from the host controller. This function is called real-time moment of inertia estimation.

The moment of inertia ratio (i.e., the ratio of the load moment of inertia to the motor moment of inertia) is a basic parameter for adjusting gains. It must be set as accurately as possible.

Although the load moment of inertia can be calculated from the weight and structure of the mechanisms, calculating it accurately can be very difficult with the complex mechanical structures that are used these days. With this function, you can estimate load moment of inertia with good accuracy.

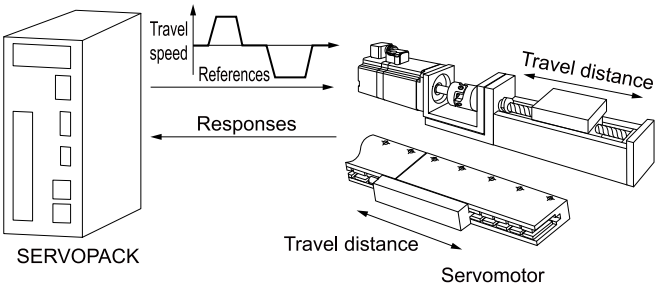

Note:

Execute this function after jogging to a position that ensures a suitable range of motion.

Information When this function is being executed, the Less-Deviation Control Function is disabled.

8.6.2 Restrictions

The following restrictions apply to estimating the moment of inertia with a host reference.

(1) Systems for which Execution Cannot Be Performed

- When the operating time is shorter than 200 ms
- For low speed operations

(2) Systems for Which Adjustments Cannot Be Made Accurately

- When a suitable range of motion is not possible
- When the machine has high dynamic friction

(3) Preparations

Always check the following before you execute moment of inertia estimation with a host reference.

- The main circuit power must be ON.
- There must be no overtravel.
- The control method must not be set to torque control.
- Pn00C must be set to n.□□□0 (Function Selection for Test without a Motor is disabled).
- There must be no alarms or warnings.
- There must be no hard wire base block (HWBB).
- The parameters must not be write prohibited.
- The SERVOPACK electronic gear ratio must be set according to the specifications in the host controller.

8.6.3 Applicable Tools

The following table lists the tools that you can use to estimate the moment of inertia with a host reference.

Tool	Fn No./Function Name	Operating Procedure Reference
Digital Operator	You cannot estimate the moment of inertia with a host reference from the digital operator.	
SigmaWin+	[Tuning] - [Tuning]	☞ *8.6.4 Operating Procedure on page 366*

8.6.4 Operating Procedure

Use the following procedure to estimate the moment of inertia with a host reference.

NOTICE

If you set an electronic gear in the host controller, confirm that the SERVOPACK's electronic gear ratio conforms to the gear ratio specified by the host controller.

There is a risk of damage or injury.

1. **Click the [ ] button for the servo drive in the workspace of the Main Window of the SigmaWin+.**

   The [Menu] window will be displayed.

2. **Click [Tuning] in the [Tuning] area.**

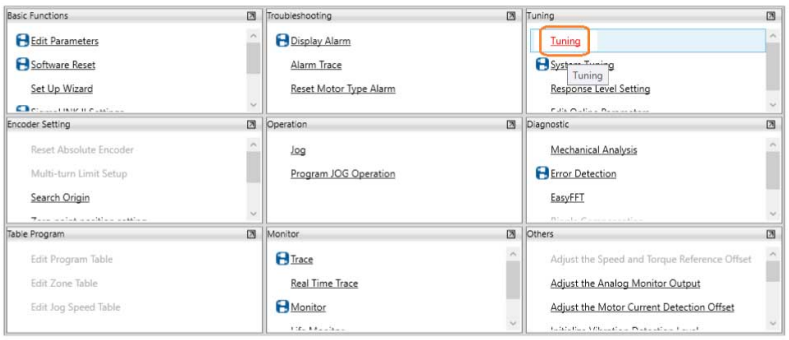

   The [Tuning] window will be displayed.

3. **Read the warnings and then click the [Execute] button.**

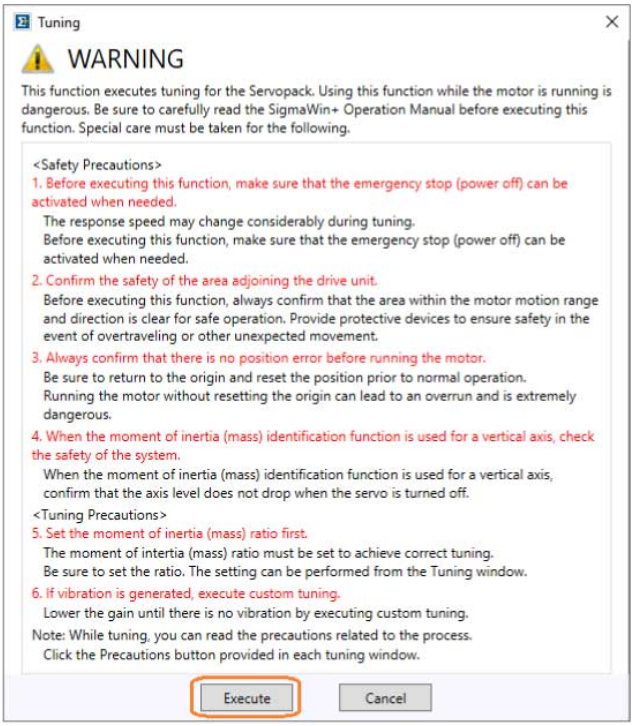

The [Tuning] window will be displayed.

4. **Under [Reference input from host controller], select [Position Reference Input], and then click the [Execute] button.**

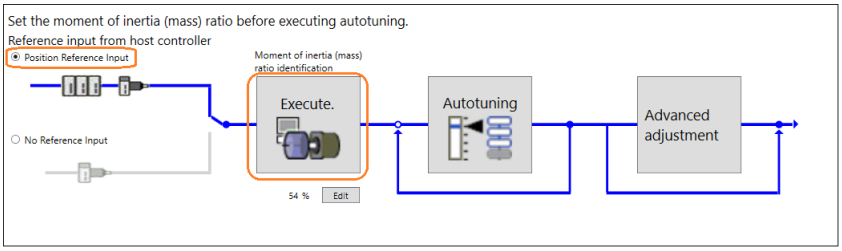

The [Moment of inertia (mass) ratio identification] window will be displayed.

5. **If you click the [Apply Estimation] button, the estimated value of the real-time moment of inertia will be applied to the settings area.**

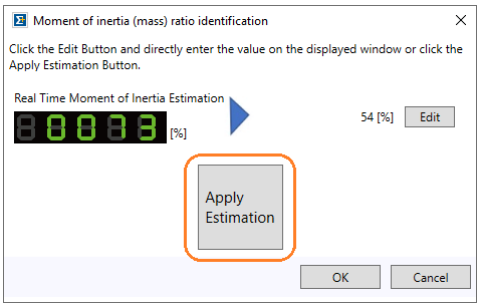

Information

Click the [Edit] button to display the [Edit] window on which you can manually enter the value.
Set the value and click the [OK] button.

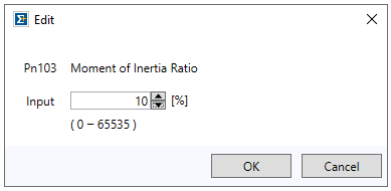

6. **Click the [OK] button.**

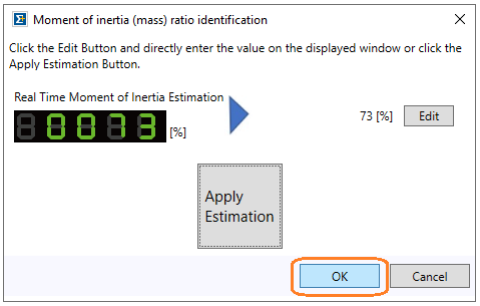

This concludes the procedure to estimate the moment of inertia with a host reference.

8.7 Autotuning without a Host Reference

This section describes autotuning without a host reference.

Important

- Autotuning without a host reference performs adjustments based on the setting of Pn100 (Speed Loop Gain). Therefore, precise adjustments cannot be made if there is vibration when adjustments are started. Make adjustments after lowering the setting of Pn100 (Speed Loop Gain) until vibration is eliminated.
- You cannot execute autotuning without a host reference if Pn170 is set to n.□□□1 (enable tuning-less function)(default setting). Set Pn170 to n.□□□0 (disable the tuning-less function) before you execute autotuning without a host reference.
- If you change the machine load conditions or drive system after you execute autotuning without a host reference and then you execute autotuning without a host reference with moment of inertia estimation specified, use the following parameter settings. If you execute autotuning without a host reference for any other conditions, the machine may vibrate and may be damaged.
  Pn140 = n.□□□0 (do not use model following control)
  Pn160 = n.□□□0 (do not use anti-resonance control)
  Pn408 = n.00□0 (disable friction compensation, first stage notch filter, and second stage notch filter)

  Note:

  If you are using the digital operator and the above parameters are not displayed, set Pn00B to n.□□□1 (display all parameters) and then turn the power OFF and ON again.

8.7.1 Outline

For autotuning without a host reference, operation is automatically performed by the SERVOPACK for round-trip (forward and reverse) operation to adjust for machine characteristics during operation. A reference from the host controller is not used.

The following items are adjusted automatically.

- Moment of inertia ratio
- Gains (e.g., speed loop gain and position loop gain)
- Filters (torque reference filter and notch filters)
- Friction compensation
- Anti-resonance control
- Vibration suppression (only for mode 2 or 3)
- Load Fluctuation Compensation Control

Refer to the following section for details on the parameters that are adjusted.

☞ *8.7.8 Related Parameters on page 386*

The servomotor is operated with the following specifications.

Maximum Motor Speed	Motor rated speed × 2/3	
Acceleration Torque	Motor rated torque: Approx. 100% **Note:** The acceleration torque depends on the setting of Pn103 (Moment of Inertia Ratio), and the influences of machine friction and external disturbance.	
Travel Distance	Rotary Servomotors	You can set the desired travel distance. The default setting is for a value equivalent to 3 servomotor shaft rotations.
	Direct Drive Servomotors	You can set the desired travel distance. The default setting is for a value equivalent to 0.3 rotations.
	Linear Servomotors	You can set the desired travel distance in increments of 1000 reference units. The default setting is for 90 mm.

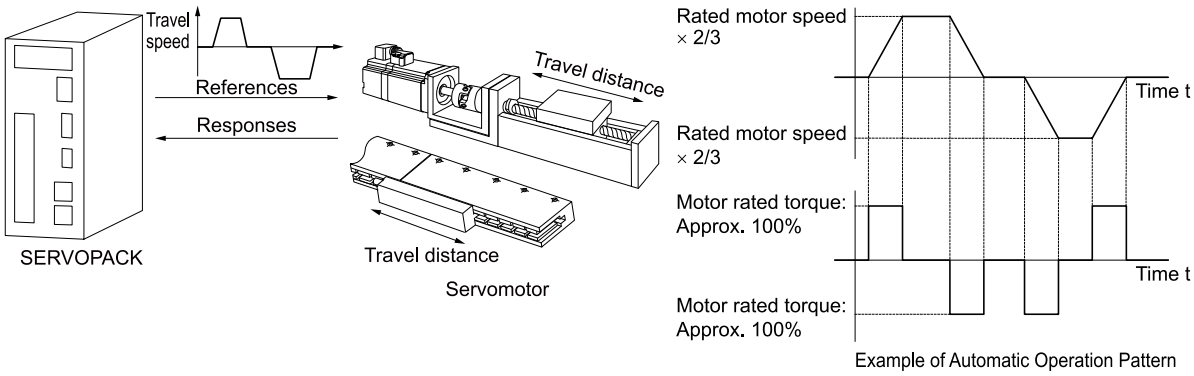

Note:

Execute this function after jogging to a position that ensures a suitable range of motion.

⚠ WARNING

Autotuning without a host reference is a measurement function that actually drives the machine and therefore presents hazards. Observe the following precautions.

- **Confirm safety around moving parts.**
- **This function involves automatic reciprocating operation. Make sure that you can perform an emergency stop (to turn OFF the power supply) at any time.**
- **There will be movement in both directions within the set range of movement. Check the range of movement and the directions and implement protective measures for safety, such as the overtravel functions.**

8.7.2 Restrictions

The following restrictions apply to autotuning without a host reference.

If you cannot use autotuning without a host reference because of these restrictions, use autotuning with a host reference or custom tuning. Refer to the following section for details.

☞ *8.8 Autotuning with a Host Reference on page 388*

☞ *8.9 Custom Tuning on page 402*

(1) Systems for which Execution Cannot Be Performed

- When the machine system can move only in one direction
- When the range of motion is 0.5 rotations or less

(2) Systems for Which Adjustments Cannot Be Made Accurately

- When a suitable range of motion is not possible
- When the moment of inertia changes within the set operating range
- When the machine has high dynamic friction
- When the rigidity of the machine is low and vibration occurs when positioning is performed
- When the position integration function is used
- When P control is used
- When mode switching is used

  Note:

  If you specify moment of inertia estimation, mode switching will be disabled and PI control will be used while the moment of inertia is being calculated. Mode switching will be enabled after moment of inertia estimation has been completed.
- When speed feedforward or torque feedforward is input
- When the setting of Pn522 (Positioning Completed Width) is too small

(3) Preparations

Always check the following before you execute autotuning without a host reference.

- The main circuit power must be ON.
- There must be no overtravel.
- The servo must be OFF.
- The control method must not be set to torque control.
- The gain 1 must be selected.
- Pn00C must be set to n.□□□0 (Function Selection for Test without a Motor is disabled).
- There must be no alarms or warnings.
- There must be no hard wire base block (HWBB).
- The parameters must not be write prohibited.
- Moment of inertia estimation must be specified when Pn170 is set to n.□□□0 (tuning-less function is disabled) or Pn170 is set to n.□□□1 (tuning-less function is enabled) (default setting).
- If you execute autotuning without a host reference during speed control, set the mode to 1.

  Information: If you start autotuning without a host reference while the SERVOPACK is in speed control for mode 2 or 3, the SERVOPACK will change to position control automatically to perform autotuning without a host reference. The SERVOPACK will return to speed control after autotuning has been completed.
- The settings of Pn533 (Program Jogging Movement Speed) and Pn385 (Maximum Motor Speed) must not satisfy either of the conditional expressions shown below.
  If either of these conditional expressions is satisfied, an A.042 (Parameter Combination Error) will occur.

  – Rotary Servomotors

  · $\text{Pn533 [min}^{-1}\text{]} \times \dfrac{\text{Encoder resolution}}{6 \times 10^5} \leq 1$

  · $\text{Maximum motor speed [min}^{-1}\text{]} \times \dfrac{\text{Encoder resolution}}{\text{Approx. } 3.66 \times 10^{12}} \geq 1$

  Information: Refer to the following section for details on the encoder resolution.

  ☞ ◆ *Encoder Resolution on page 210*

  – Linear Servomotors

  · $\dfrac{\text{Pn385 [100 mm/s]}}{\text{Linear encoder scale pitch [μm]}} \times \dfrac{\text{Number of divisions of the serial converter unit}}{10} \leq 1$

  · $\dfrac{\text{Pn385 [100 mm/s]}}{\text{Linear encoder scale pitch [μm]}} \times \dfrac{\text{Number of divisions of the serial converter unit}}{\text{Approx. } 6.10 \times 10^5} \geq 1$

8.7.3 Applicable Tools

The following table lists the tools that you can use to perform autotuning without a host reference.

Tool	Fn No./Function Name	Operating Procedure Reference
Digital Operator	Fn201	📖 Σ-7/Σ-X-Series Digital Operator Operating Manual (Manual No.: SIEP S800001 33)
SigmaWin+	[Tuning] - [Tuning]	☞ *8.7.4 Operating Procedure on page 371*

8.7.4 Operating Procedure

Use the following procedure to perform autotuning without a host reference.

⚠ CAUTION

If you specify not estimating the moment of inertia, set Pn103 (Moment of Inertia Ratio) correctly.

If the setting greatly differs from the actual moment of inertia ratio, normal control of the machine may not be possible, and vibration may result.

1. **Confirm that the value of Pn103 (Moment of Inertia Ratio) is set correctly.**

2. **Click the [ ] button for the servo drive in the workspace of the Main Window of the SigmaWin+.**

   The [Menu] window will be displayed.

3. **Click [Tuning] in the [Tuning] area.**

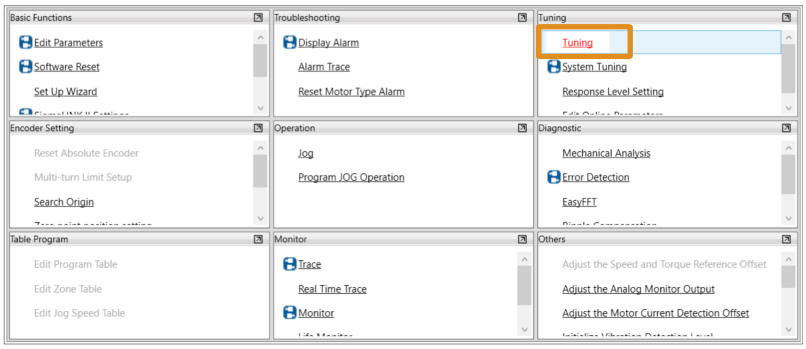

   The [Tuning] window will be displayed.

4. **Read the warnings and then click the [Execute] button.**

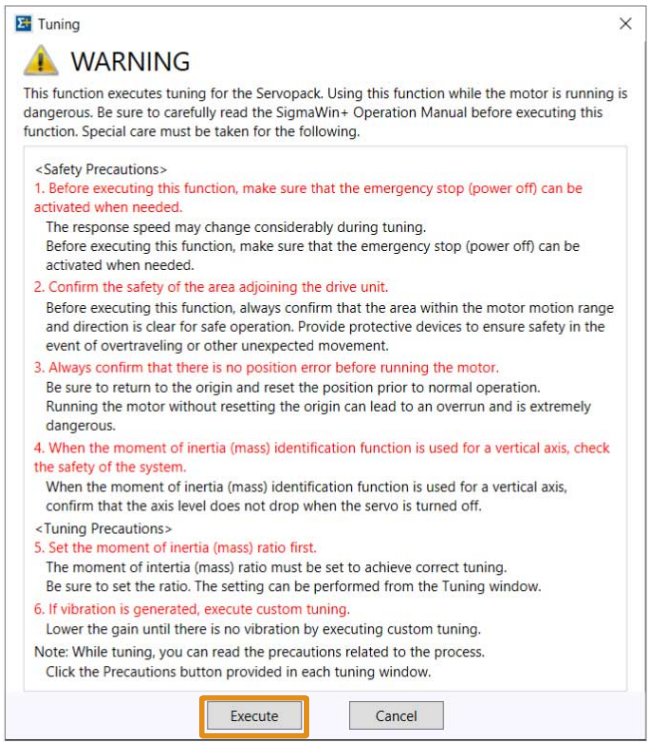

5. **Click [No Reference Input] in [Reference input from host controller] and then click the [Autotuning] button.**

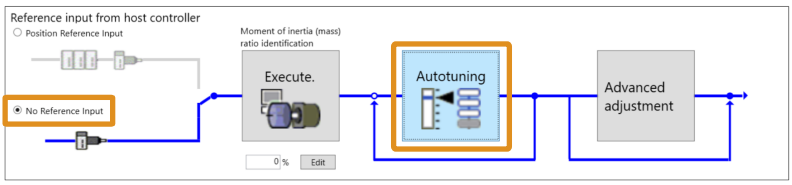

Information When the following message dialog box is displayed, click the [OK] button and then confirm that Pn103 (Moment of Inertia Ratio) is set correctly.

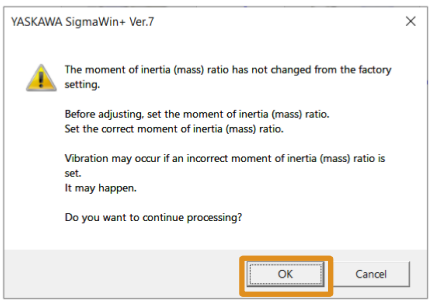

6. **Set the conditions, and then click the [Next] button.**

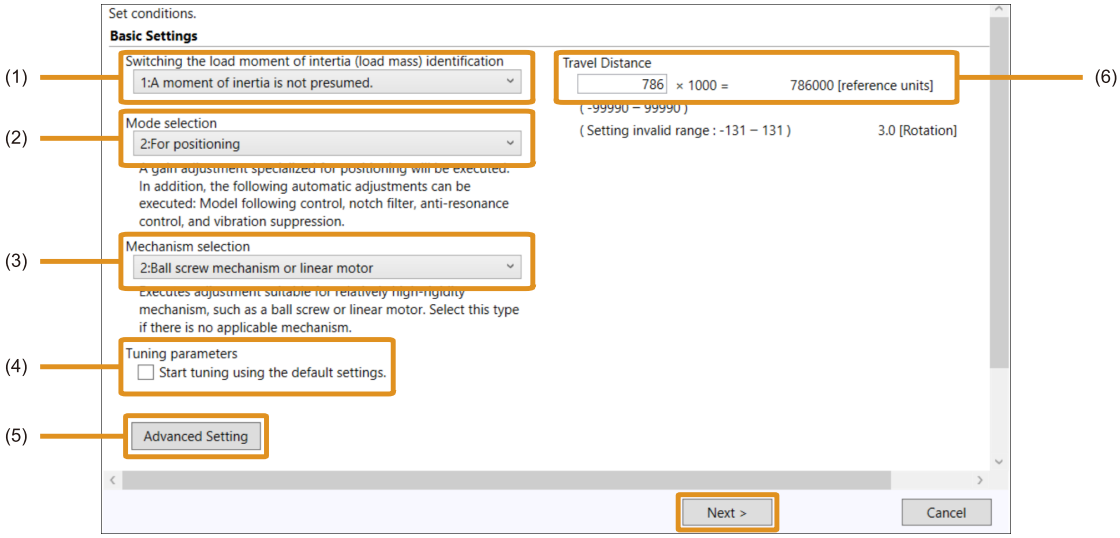

No.	Item	Meaning
(1)	[Switching the load moment of inertia (load mass) identification]	Specify whether to estimate the moment of inertia.
(2)	[Mode selection]	Set the mode. For details on the options, refer to the explanations on the window.
(3)	[Mechanism selection]	Select the type according to the machine element to drive. If there is noise or if the gain does not increase, better results may be obtained by changing the rigidity type. For details on the options, refer to the explanations on the window.
(4)	[Tuning parameters]	Specify the parameters to use for tuning. If you select [Start tuning using the default settings], the tuning parameters will be returned to the default settings before tuning is started.

Continued on next page.

Continued from previous page.

No.	Item	Meaning
(5)	[Advanced Setting] button	Click this button to display the [Advanced Setting] window on which you can set the details of tuning conditions. Configure detailed tuning conditions in the following cases: • To tune a higher response than the tuning results • When tuning fails with a large amount of overshoot • To tune with speed I-P control 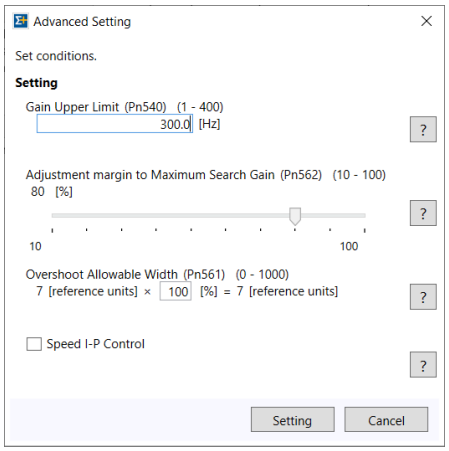
(6)	[Travel Distance]	Set the travel distance. Movement range: -99990000 to +99990000 [reference units] Minimum setting increment for travel distance: 1000 [reference units] Negative values are for reverse operation and positive values are for forward operation from the current position. Default settings: Rotary servomotors: Approx. 3 rotations Direct drive servomotors: Approx. 0.3 rotations Linear servomotors: Approx. 90 mm Set the distance to the following values or higher. To ensure tuning precision, we recommend that you use approximately the default distance setting. Rotary servomotors: 0.5 rotations Direct drive servomotors: 0.05 rotations Linear servomotors: 5 mm

7. **Click the [Servo ON] button.**

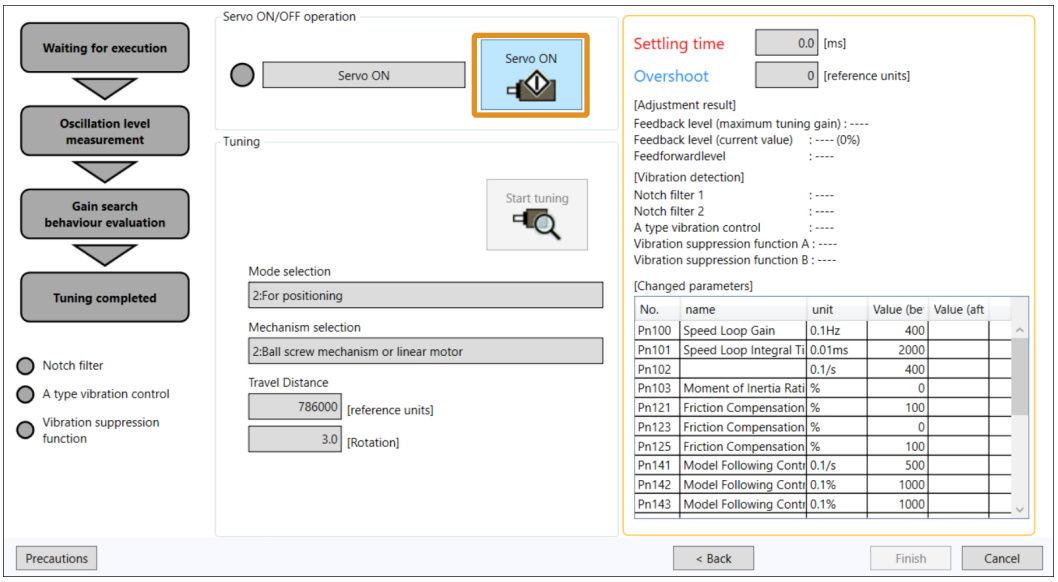

8. **Click the [Start tuning] button.**

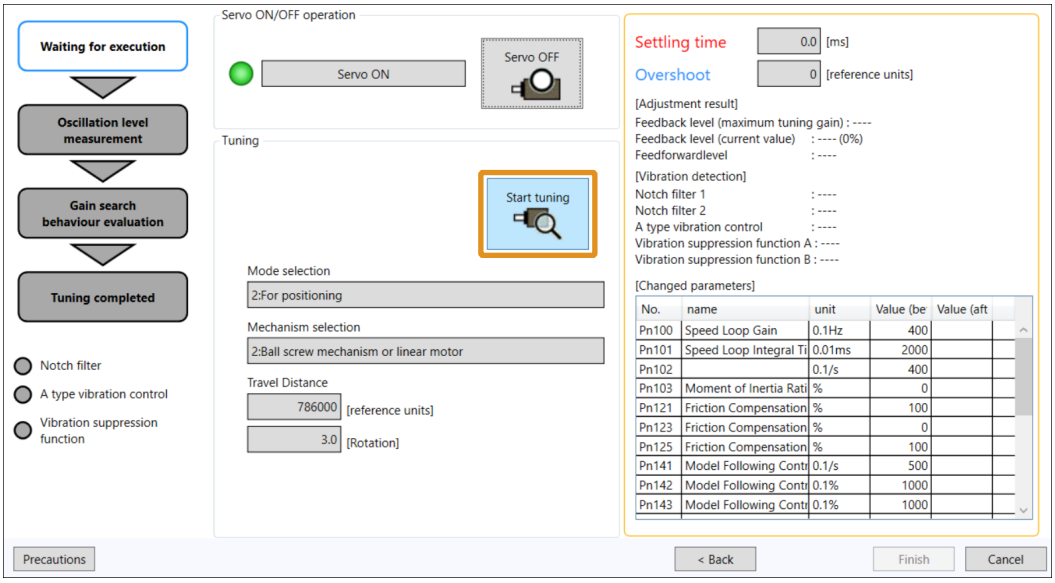

9. **Confirm safety around moving parts and click the [Yes] button.**

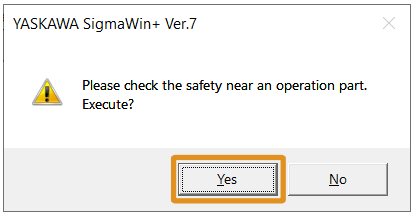

The servomotor will start operating and tuning will be executed.

Vibration that occurs during tuning will be detected automatically and suitable settings will be made for that vibration. The content to set will be displayed on the right side of the window. When the settings have been completed, the indicators for the functions that were used will light at the lower left of the window.

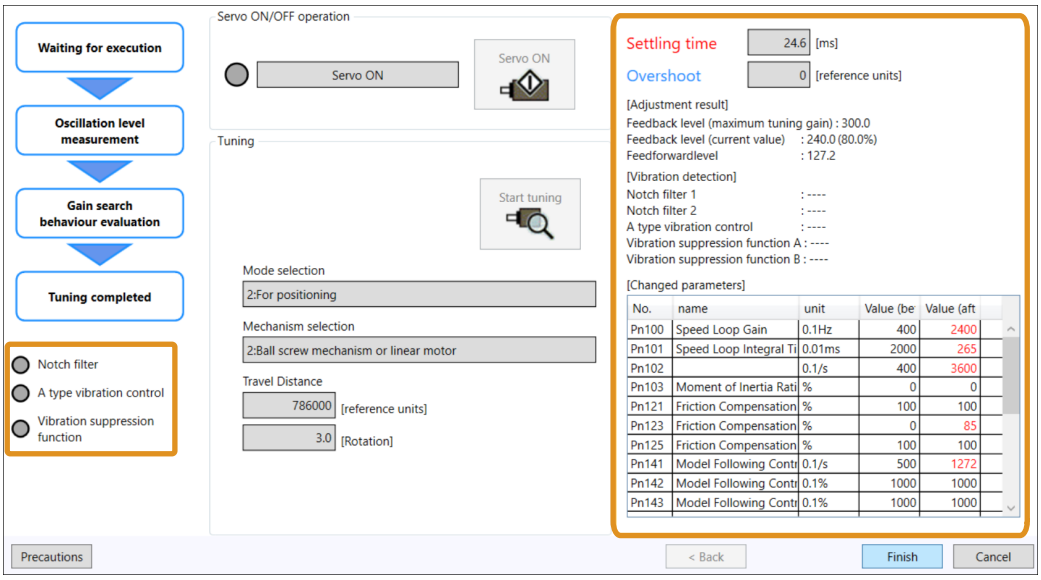

Details on the content to set are shown below.

Item	Meaning
[Settling time]	Displays the settling time by the tuning results.
[Overshoot]	Displays the maximum overshoot by the tuning results.

Continued on next page.

Continued from previous page.

Item	Meaning
[Feedback level (maximum tuning gain)]	Displays the maximum value of Pn100 (Speed Loop Gain) during tuning. In mode selection, if using “Load Fluctuation Priority”, the maximum value for Pn174 (Load Fluctuation Compensation Control Response Level) will be displayed.
[Feedback level (current value)]	Displays the value of Pn100 (Speed Loop Gain) after tuning. The number in parentheses is the percentage of adjusting maximum gain. In mode selection, if using “Load Fluctuation Priority”, the current value for Pn174 (Load Fluctuation Compensation Control Response Level) will be displayed.
[Feedforward level]	Displays the value of Pn141 (Model Following Control Gain) after tuning.
[Notch filter 1] [Notch filter 2]	Displays the frequencies set by the notch filters. "——" is displayed if not set.
[A type vibration control]	Displays the frequency set by anti-resonance control. "——" is displayed if not set.
[Vibration suppression function A] [Vibration suppression function B]	Displays the frequencies set by vibration suppression. "——" is displayed if not set.

10. **When tuning has been completed, click the [Finish] button.**

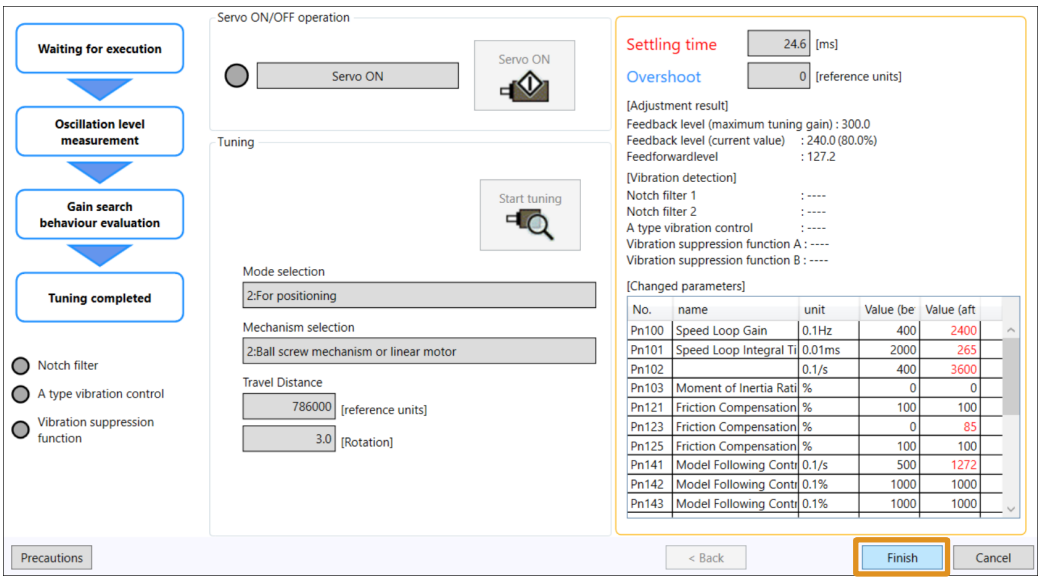

The message dialog box will be displayed.

11. **Click the [OK] button.**

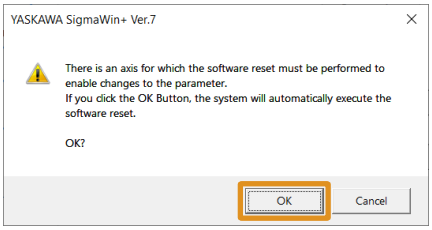

The software will be reset, the results of tuning will be set in the parameters, and you will return to the [Tuning] window.

This concludes the procedure to perform autotuning without a host reference.

8.7.5 Operating Procedure for Multi-Axis Simultaneous Tuning

Multi-axis simultaneous tuning (without Host Reference) is a function you can use to tune multiple axes at the same time.

The conditions for using this function are:

- Two or more axes are connected to the SERVOPACK.
- The software version of the SERVOPACK is Ver. 0009 or later.

Use the following procedure to perform multi-axis simultaneous tuning.

1. **Confirm that the value of Pn103 (Moment of Inertia Ratio) is set correctly.**
2. **Click the [ ] button for the servo drive in the workspace of the Main Window of the SigmaWin+.**

   The [Menu] window will be displayed.
3. **Click [Multi-Axis Simultaneous Tuning] in the [Tuning] area.**

   The [Multi-Axis Simultaneous Tuning] window will be displayed.

   Information Multi-axis simultaneous tuning cannot be executed if there is only one online SERVOPACK axis displayed in the workspace.
4. **Read the warnings and then click the [Execute] button.**

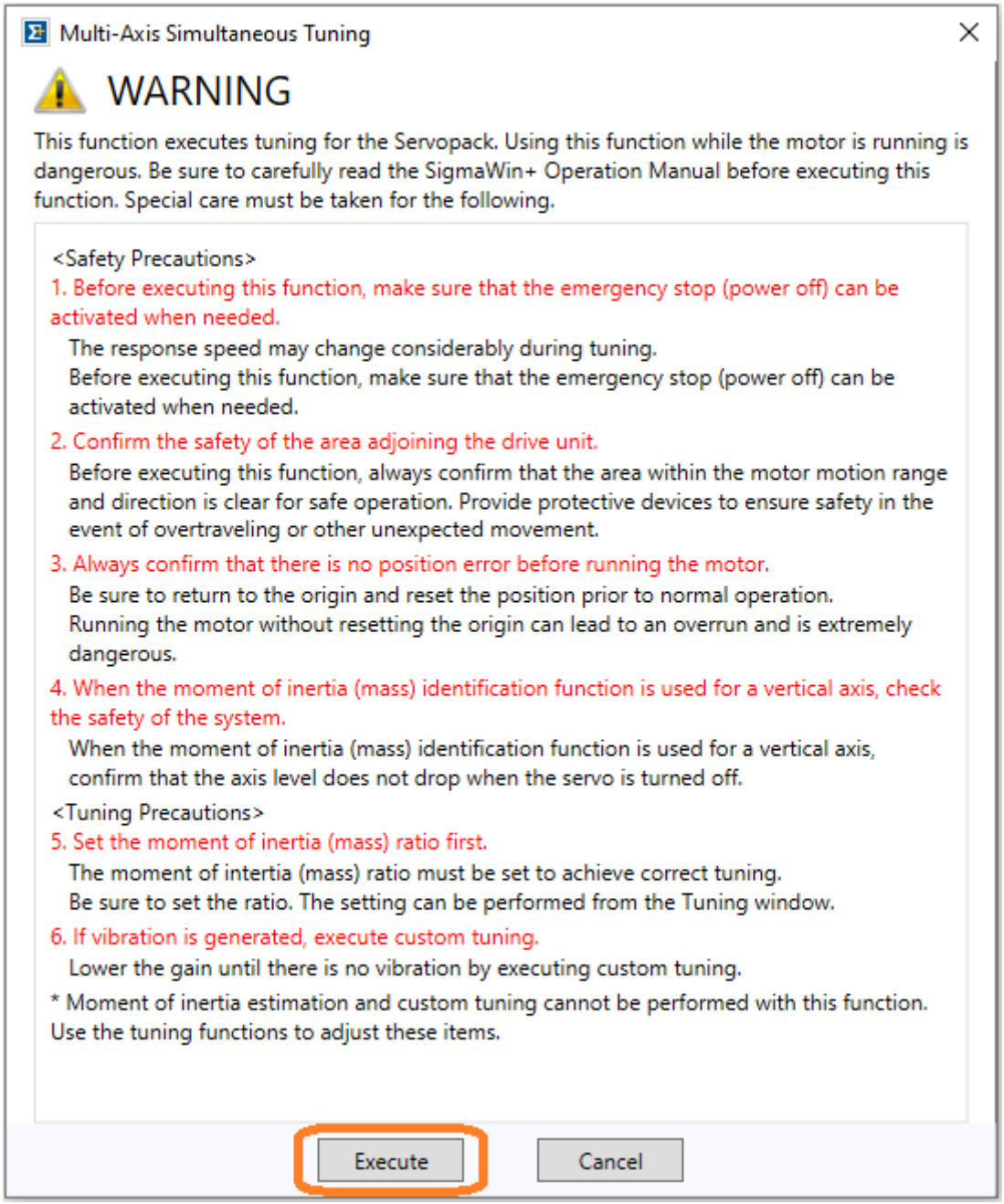

5. **Configure the following screen's settings, and then click the [Next] button.**

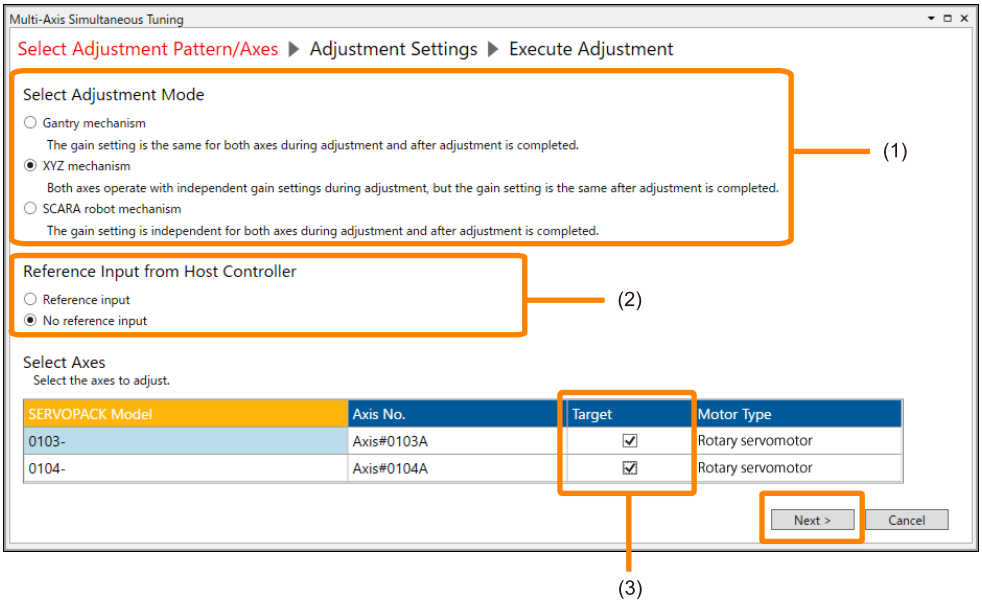

No.	Item	Meaning
(1)	[Tuning Mode Selection]	Select the tuning mode to comply with the mechanism. For details on the options, refer to the explanations on the window. **Note:** XYZ mechanisms are not compatible with SERVOPACKs with software versions before 000B.
(2)	[Reference input from host controller]	Select whether references are or are not sent (= the SERVOPACK will automatically operate) to the SERVOPACK from the host controller during tuning. **Note:** If "Gantry mechanism" is selected under [Select Adjustment Mode], "No reference input" cannot be selected. (Will be tuning "with a Host Reference".)
(3)	[Target]	Select the [Target] check box for the axes to tune. **Note:** Axes displayed in gray cannot be selected as they are not compatible with the selected tuning mode.

Information Tunable axes and axis numbers will differ depending on the connected SERVOPACK and selected tuning mode.

6. **If setting conditions for all axes in a batch, click the [Batch Settings] area's [Setting] button. If setting conditions individually, click the [Setting] button in the [Individual Settings] area.**

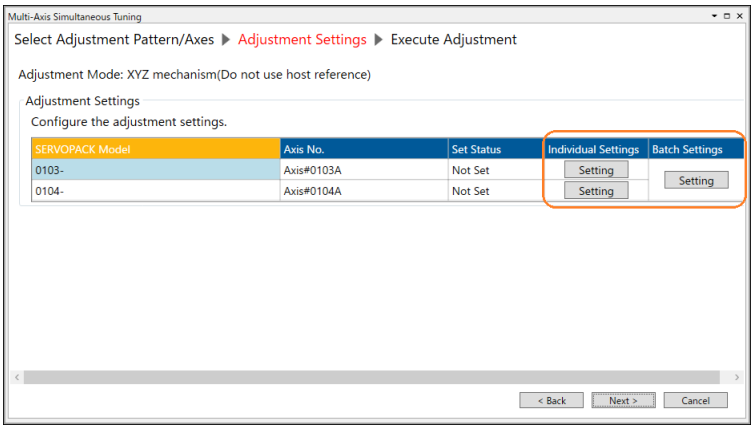

7. **Set the conditions, and then click the [Setting] button.**

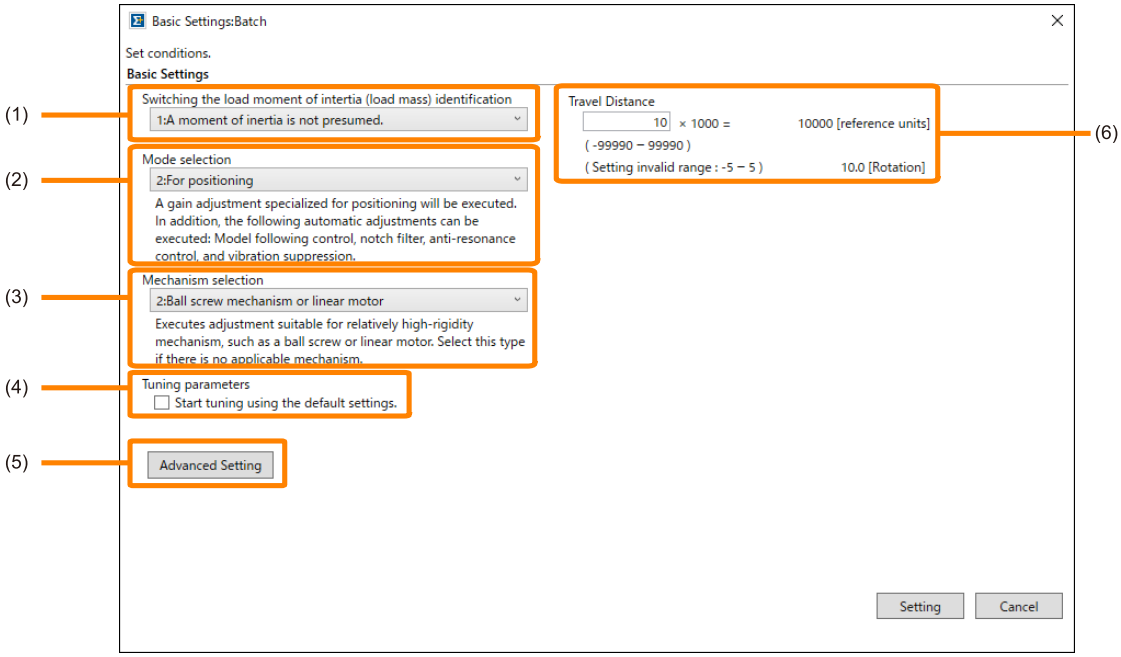

Information

- If the tuning mode is “XYZ mechanism” and “Individual setting”, the following windows will be displayed. Only [Travel Distance] can be set on the [Basic Settings] window.

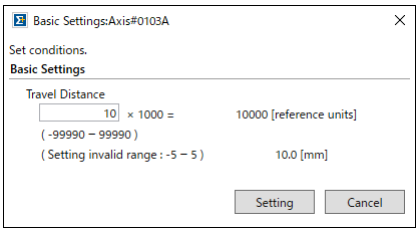

- If attempting to batch settings for multiple axes with different motor types, the travel distance cannot be set. Set each travel distance with individual settings.

No.	Item	Meaning
(1)	[Switching the load moment of inertia (load mass) identification]	Specify whether to estimate the moment of inertia.
(2)	[Mode selection]	Set the mode. For details on the options, refer to the explanations on the window.
(3)	[Mechanism selection]	Select the type according to the machine element to drive. If there is noise or if the gain does not increase, better results may be obtained by changing the rigidity type. For details on the options, refer to the explanations on the window.
(4)	[Tuning parameters]	Specify the parameters to use for tuning. If you select [Start tuning using the default settings], the tuning parameters will be returned to the default settings before tuning is started.

Continued on next page.

Continued from previous page.

No.	Item	Meaning
(5)	[Advanced Setting] button	Click this button to display the [Advanced Setting] window on which you can set the details of tuning conditions. Configure detailed tuning conditions in the following cases: • To tune a higher response than the tuning results • When tuning fails with a large amount of overshoot • To tune with speed I-P control 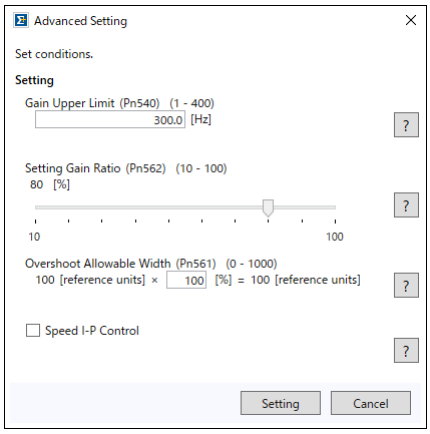
(6)	Travel Distance	Input the distance to travel during tuning into [Travel Distance]. Movement range: -99990000 to +99990000 [reference units] Minimum setting increment for travel distance: 1000 [reference units] Negative values are for reverse operation and positive values are for forward operation from the current position. Default settings: • Rotary servomotors: Approx. 3 rotations • Direct drive servomotors: Approx. 0.3 rotations • Linear servomotors: Approx. 90 mm Set the distance to the following values or higher. To ensure tuning precision, we recommend that you use approximately the default distance setting. • Rotary servomotors: 0.5 rotations • Direct drive servomotors: 0.05 rotations • Linear servomotors: 5 mm

8. **Confirm that [Set Status] for all axes has changed to [Set], and then click the [Next] button.**

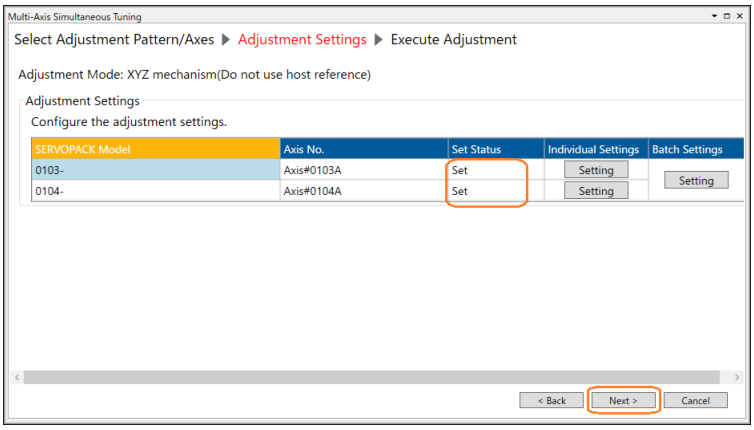

9. **Click the [Servo ON] button.**

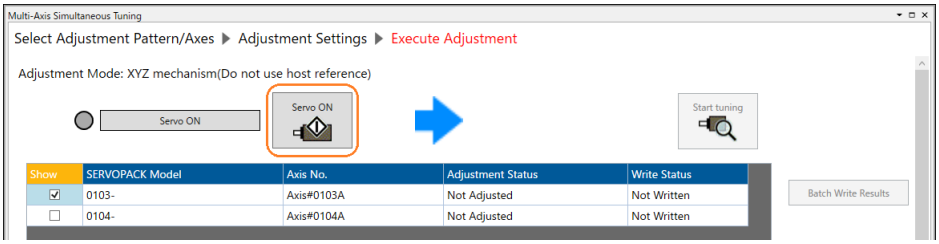

10. **Click the [Start tuning] button.**

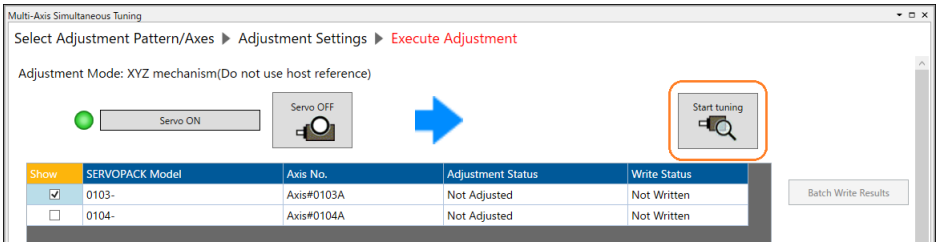

11. **Confirm safety around moving parts and click the [Yes] button.**

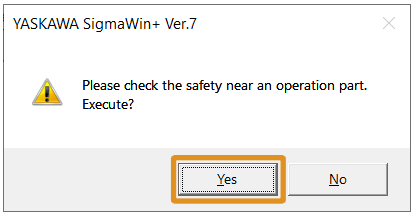

The servomotor shaft will rotate and tuning will start.

Vibration that occurs during tuning will be detected automatically and suitable tuning for that vibration will be performed. The tuned content will be displayed in the window.

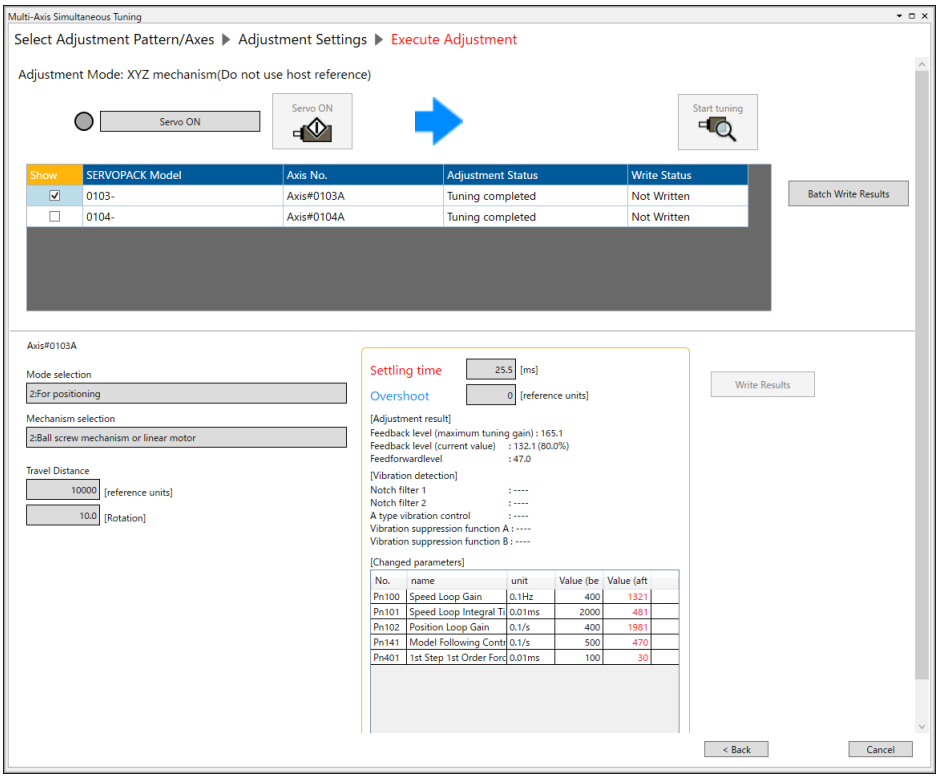

Details on the tuned content are shown below.

Item	Meaning
[Settling time]	Displays the settling time by the tuning results.
[Overshoot]	Displays the maximum overshoot by the tuning results.
[Feedback level (maximum tuning gain)]	Displays the maximum value of Pn100 (Speed Loop Gain) during tuning.
[Feedback level (current value)]	Displays the value of Pn100 (Speed Loop Gain) after tuning. The number in parentheses is the percentage of adjusting maximum gain.
[Feedforward level]	Displays the value of Pn141 (Model Following Control Gain) after tuning.
[Notch filter 1] [Notch filter 2]	Displays the frequencies set by the notch filters. "——" is displayed if not set.
[A type vibration control]	Displays the frequency set by anti-resonance control. "——" is displayed if not set.
[Vibration suppression function A] [Vibration suppression function B]	Displays the frequencies set by vibration suppression. "——" is displayed if not set.

If tuning is completed normally, "Tuning completed" will be displayed in the [Adjustment Status] area.

12. **Click the [Batch Write Results] button.**

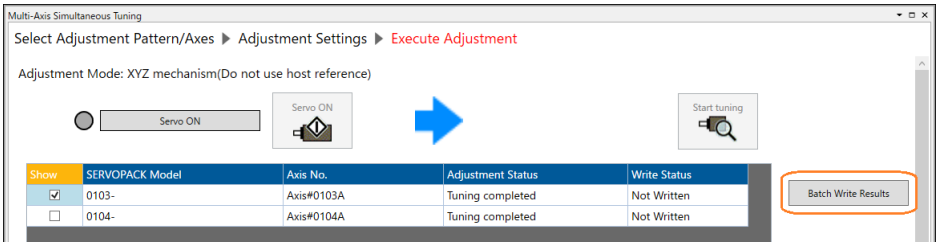

Information

If using SCARA robot mechanism, tuning results for the axes that were optionally selected can be written individually. Select the [Show] check box for the axes to be written, and then click [Write Results] button.

13. **Confirm that [Write Status] is at “Writing Completed”, and then click the [Finish] button.**

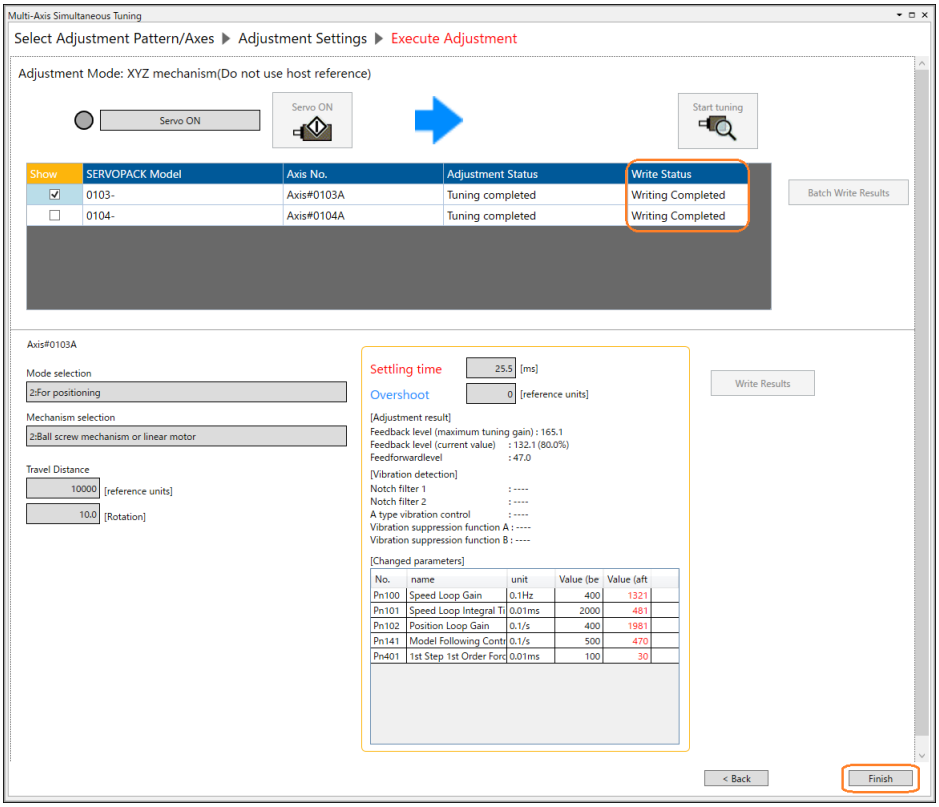

14. **Click the [OK] button.**

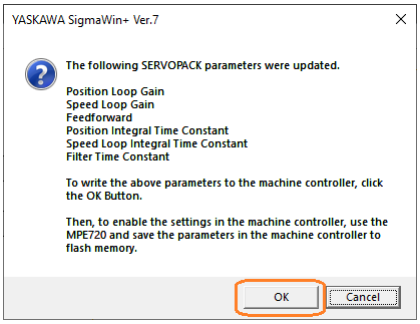

This concludes the procedure to perform multi-axis simultaneous tuning (without host reference).

8.7.6 Troubleshooting Problems in Autotuning without a Host Reference

The following tables give the causes of and corrections for problems that may occur in autotuning without a host reference.

(1) Autotuning without a Host Reference Was Not Performed

Possible Cause	Corrective Action
Main circuit power is OFF.	Turn ON the main circuit power.
An alarm or warning occurred.	Remove the cause of the alarm or warning.
Overtraveling occurred.	Remove the cause of overtraveling.
Gain 2, gain 3, or gain 4 was selected with the gain selection.	Disable automatic gain switching and select gain 1.
The HWBB was activated.	Release the HWBB.
The setting of the travel distance is too small.	Set the travel distance again in step 6 of the procedure.
The settings for the tuning-less function are not correct.	• Set Pn170 to n.□□□0 (disable the tuning-less function). • Set Pn170 to n.□□□1 (enable the tuning-less function) and specify moment of inertia estimation.

(2) When an Error Occurs during Execution of Autotuning without a Host Reference

Error	Possible Cause	Corrective Action
The gain adjustments were not successfully completed.	Machine vibration occurs or the positioning completion signal is not stable when the servomotor stops.	• On the [Detailed Setting] window, increase the setting of Pn561 (Overshoot Detection Level). • Increase the setting of Pn522 (Positioning Completed Width). • On the [Detailed Setting] window, decrease the setting of Pn562 (Setting Gain Ratio). • Change the mode from 2 to 3. • If machine vibration occurs, suppress the vibration with the anti-resonance control adjustment and the vibration suppression function.
An error occurred during calculation of the moment of inertia.	Refer to the following section for troubleshooting information. ☞ *(3) When an Error Occurs during Calculation of Moment of Inertia on page 384*	
Positioning was not completed within approximately 10 seconds after position adjustment was completed.	The positioning completed width is too narrow or proportional control is being used.	• Increase the setting of Pn522 (Positioning Completed Width).

(3) When an Error Occurs during Calculation of Moment of Inertia

Possible Cause	Corrective Action
The SERVOPACK started calculating the moment of inertia but the calculation was not completed.	• Increase the setting of Pn100 (Speed Loop Gain). • Increase the stroke (travel distance).
The moment of inertia fluctuated greatly and did not converge within 10 tries.	Set Pn103 (Moment of Inertia Ratio) from the machine specifications and specify not estimating the moment of inertia.
Low-frequency vibration was detected.	Double the setting of Pn324 (Moment of Inertia Calculation Starting Level).
The torque limit was reached.	• If you are using the torque limit, increase the torque limit. • Double the setting of Pn324 (Moment of Inertia Calculation Starting Level).
Speed control changed to proportional control during calculation of the moment of inertia.	Use PI control when calculating the moment of inertia.

(4) Adjustment Results Are Not Satisfactory for Position Control

Configuring parameters as shown below may improve the adjustment results.

- Change Pn522 (Positioning Completed Width) and the Position User Unit (2701h).
- Adjust Pn561 (Overshoot Detection Level).
  You can change these parameters on the [Adjustment Settings] window. Details on the settings of Pn561 are shown below.

Setting of Pn561	Meaning
0% to 99%	This will allow tuning to be performed without overshooting within the positioning completed width, but the positioning completed width may be extended.
100% (default setting)	This will allow tuning with overshooting that is equivalent to the positioning completed width.
101% to 1000%	The settings that allow overshooting to exceed the positioning completed width. Adjust Pn561 (Overshoot Detection Level) without changing the positioning completed width. Increase this setting when high responsiveness is required even if overshooting increases.

- Increase the upper limits for tuning.
  However, the changes in these settings are valid only when the tuning results are Pn100 = 2400 [0.1 Hz] (speed loop gain = 240 Hz) and Pn141 = 6000 [0.1/s] (model following control gain = 600/s). If you increase the upper limits of tuning at this time, you may be able to further decrease the settling time.
  You can change the upper limits of tuning on the [Detailed Setting] window. Set the parameters as shown below.
  - Pn540 = 3000 [0.1 Hz] or higher (maximum search gain = 300 Hz [default setting] or higher)
  - Pn562 = 80 [%] or higher (setting gain ratio = 80% [default setting] or higher)

8.7.7 Automatically Adjusted Function Setting

You can specify whether to automatically adjust the following functions during autotuning.

(1) Automatic Notch Filters

Normally, set Pn460 to n.□1□□ (adjust automatically) (default setting).

Vibration will be detected during autotuning without a host reference and a notch filter will be adjusted.

Set Pn460 to n.□0□□ (do not adjust automatically) only if you do not change the setting of the notch filter before you execute this function.

Pn460 (2460h)	n.□□□X	Notch Filter Adjustment Selection 1 Speed Pos Trq		When Enabled
		0	Do not adjust the first stage notch filter automatically during execution of autotuning without a host reference, autotuning with a host reference, and custom tuning.	Immediately
		1 Default	Adjust the first stage notch filter automatically during execution of autotuning without a host reference, autotuning with a host reference, and custom tuning.	
Pn460 (2460h)	n.□X□□	Notch Filter Adjustment Selection 2 Speed Pos Trq		When Enabled
		0	Do not adjust the second stage notch filter automatically when the tuning-less function is enabled or during execution of autotuning without a host reference, autotuning with a host reference, and custom tuning.	Immediately
		1 Default	Adjust the second stage notch filter automatically when the tuning-less function is enabled or during execution of autotuning without a host reference, autotuning with a host reference, and custom tuning.	

(2) Anti-Resonance Control Adjustment

This function reduces low vibration frequencies, for which the notch filters cannot be used.

Normally, set Pn160 to n.□□1□ (adjust automatically) (default setting).

Vibration will be detected during autotuning without a host reference and anti-resonance control will be automatically adjusted.

Pn160 (2160h)	n.□□X□	Anti-Resonance Control Adjustment Selection Speed Pos Trq		When Enabled
		0	Do not adjust anti-resonance control automatically during execution of autotuning without a host reference, autotuning with a host reference, and custom tuning.	Immediately
		1 Default	Adjust anti-resonance control automatically during execution of autotuning without a host reference, autotuning with a host reference, and custom tuning.	

(3) Vibration Suppression

You can use vibration suppression to suppress transitional vibration at a low frequency from 1 Hz to 100 Hz, which is generated mainly when the machine vibrates during positioning.

Normally, set Pn140 to n.□1□□ (adjust automatically) (default setting).

Vibration will be detected during autotuning without a host reference and vibration suppression control will be automatically set.

Set Pn140 = n.□0□□ (do not adjust automatically) only if you do not change the settings for vibration suppression before you execute this function.

Note:

This function uses model following control. Therefore, it can be executed only if the mode is set to 2 or 3.

Pn140 (2140h)	n.□X□□	Vibration Suppression Adjustment Selection Speed Pos Trq		When Enabled
		0	Do not adjust vibration suppression automatically during execution of autotuning without a host reference, autotuning with a host reference, and custom tuning.	Immediately
		1 Default	Adjust vibration suppression automatically during execution of autotuning without a host reference, autotuning with a host reference, and custom tuning.	

(4) Friction Compensation

Friction compensation compensates for changes in the following conditions.

- Changes in the viscous resistance of the lubricant, such as grease, on the sliding parts of the machine
- Changes in the friction resistance resulting from variations in the machine assembly
- Changes in the friction resistance due to aging

The conditions for applying friction compensation depend on the mode selection.

Mode Selection Settings	Friction Compensation
1: Standard	Based on the setting of Pn408 = n.X□□□ (Friction Compensation Function Selection) *1
2. Priority to settling time	Adjusted with friction compensation.
3: Priority to overshoot control	
5: Load Fluctuation Priority	Pn408 disabled

		Friction Compensation Function Selection Speed Pos Trq		When Enabled
Pn408 (2408h)	n.X□□□	0 Default	Disable friction compensation.	Immediately
		1	Enable friction compensation.	

*1 For details, refer to the following section.
☞ (1) Required Parameter Settings on page 460

(5) Feedforward

If Pn140 is set to n.0□□□ (do not use model following control and speed/torque feedforward together (default setting)) and tuning is performed with the mode selection set to 2 or 3, the setting of Pn109 (Feedforward), the speed feedforward input, and the torque feedforward input will be disabled.

To use the speed feedforward input, the torque feedforward input, and model following control from the host controller in the system, set Pn140 to n.1□□□ (use model following control and speed/torque feedforward together).

		Speed Feedforward (VFF)/Torque Feedforward (TFF) Selection Speed Pos Trq		When Enabled
Pn140 (2140h)	n.X□□□	0 Default	Do not use model following control and speed/torque feedforward together.	Immediately
		1	Use model following control and speed/torque feedforward together.	

Important

When model following control is used with this function, it is used to make optimum feedforward settings in the SERVOPACK. Therefore, model following control is not normally used together with either the speed feedforward input or torque feedforward input from the host controller. However, model following control can be used with the speed feedforward input or torque feedforward input if required. An unsuitable feedforward input may result in overshooting.

8.7.8 Related Parameters

The following parameters are automatically adjusted or used as reference when you execute autotuning without a host reference.

Do not change the settings while autotuning without a host reference is being executed.

Parameter	Name	Automatic Changes
Pn100 (2100h)	Speed Loop Gain	Yes
Pn101 (2101h)	Speed Loop Integral Time Constant	Yes
Pn102 (2102h)	Position Loop Gain	Yes
Pn103 (2103h)	Moment of Inertia Ratio	Yes
Pn121 (2121h)	Friction Compensation Gain	Yes
Pn123 (2123h)	Friction Compensation Coefficient	Yes
Pn124 (2124h)	Friction Compensation Frequency Correction	No
Pn125 (2125h)	Friction Compensation Gain Correction	Yes
Pn401 (2401h)	First Stage First Torque Reference Filter Time Constant	Yes

Continued on next page.

Continued from previous page.

Parameter	Name	Automatic Changes
Pn408 (2408h)	Torque-Related Function Selections	Yes
Pn409 (2409h)	First Stage Notch Filter Frequency	Yes
Pn40A (240Ah)	First Stage Notch Filter Q Value	Yes
Pn40C (240Ch)	Second Stage Notch Filter Frequency	Yes
Pn40D (240Dh)	Second Stage Notch Filter Q Value	Yes
Pn140 (2140h)	Model Following Control-Related Selections	Yes
Pn141 (2141h)	Model Following Control Gain	Yes
Pn142 (2142h)	Model Following Control Gain Correction	Yes
Pn143 (2143h)	Model Following Control Bias in the Forward Direction	Yes
Pn144 (2144h)	Model Following Control Bias in the Reverse Direction	Yes
Pn145 (2145h)	Vibration Suppression 1 Frequency A	Yes
Pn146 (2146h)	Vibration Suppression 1 Frequency B	Yes
Pn147 (2147h)	Model Following Control Speed Feedforward Compensation	Yes
Pn14F (214Fh) = n.□□□X	Model Following Control Type Selection	Yes
Pn160 (2160h)	Anti-Resonance Control-Related Selections	Yes
Pn161 (2161h)	Anti-Resonance Frequency	Yes
Pn163 (2163h)	Anti-Resonance Damping Gain	Yes
Pn173 (2173h)	Load Fluctuation Compensation Control-Related Selections	Yes
Pn174 (2174h)	Load Fluctuation Compensation Control Response Level	Yes
Pn531 (2531h)	Program Jogging Travel Distance	No
Pn533 (2533h)	Program Jogging Movement Speed for Rotary Servomotor	No
Pn585 (2585h)	Program Jogging Movement Speed for Linear Servomotor	No
Pn534 (2534h)	Program Jogging Acceleration/Deceleration Time	No
Pn535 (2535h)	Program Jogging Waiting Time	No
Pn536 (2536h)	Program Jogging Number of Movements	No

Yes: The parameter is automatically set.

No: The parameter is not automatically set, but the setting is read during execution.

8.8 Autotuning with a Host Reference

This section describes autotuning with a host reference.

> **Important**
> Autotuning with a host reference makes adjustments based on the setting of Pn100 (Speed Loop Gain). Therefore, precise adjustments cannot be made if there is vibration when adjustments are started. Make adjustments after lowering the setting of Pn100 (Speed Loop Gain) until vibration is eliminated.

8.8.1 Outline

Autotuning with a host reference automatically makes optimum adjustments for operation references from the host controller.

The following items are adjusted automatically.

- Gains (e.g., speed loop gain and position loop gain)
- Filters (torque reference filter and notch filters)
- Friction compensation
- Anti-resonance control
- Vibration suppression
- Load Fluctuation Compensation Control

Refer to the following section for details on the parameters that are adjusted.

☞ *8.8.8 Related Parameters on page 401*

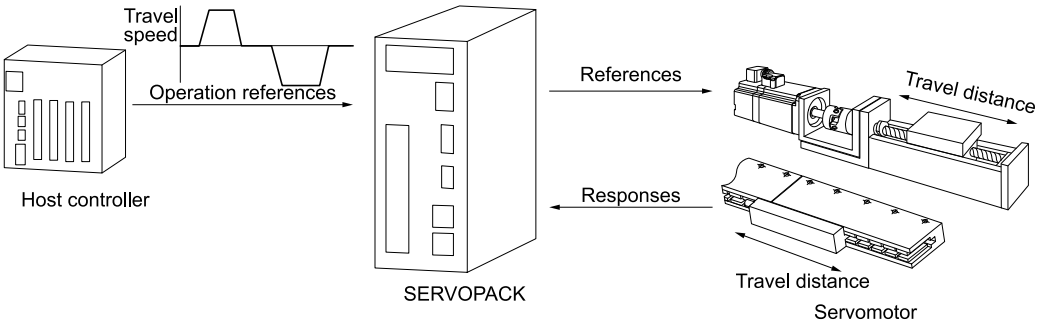

> **⚠ CAUTION**
>
> **Because autotuning with a host reference adjusts the SERVOPACK during automatic operation, vibration or overshooting may occur. To ensure safety, make sure that you can perform an emergency stop at any time when you execute this function.**

8.8.2 Restrictions

(1) Systems for Which Adjustments Cannot Be Made Accurately

Adjustments will not be made correctly for autotuning with a host reference in the following cases. Use custom tuning.

- When the travel distance for the reference from the host controller is equal to or lower than the setting of Pn522 (Positioning Completed Width).
- Rotary Servomotors: When the movement speed for the reference from the host controller is equal to or lower than the setting of Pn502 (Rotation Detection Level)
- Linear Servomotors: When the movement speed for the reference from the host controller is equal to or lower than the setting of Pn581 (Zero Speed Level)
- When the time required to stop is 10 ms or less

- When the rigidity of the machine is low and vibration occurs when positioning is performed
- When the position integration function is used
- When P control is used
- When mode switching is used
- When the setting of Pn522 (Positioning Completed Width) is too small

Refer to the following sections for details on custom tuning.

☞ *8.9 Custom Tuning on page 402*

(2) Preparations

Always check the following before you execute autotuning with a host reference.

- The servo must be in ready status.
- There must be no overtravel.
- The servo must be OFF.
- Position control must be selected if power is supplied to the motor (i.e., when the servo is ON).
- The gain 1 must be selected.
- Pn00C must be set to n.□□□0 (Function Selection for Test without a Motor is disabled).
- Pn170 must be set to n.□□□0 (Tuning-less Selection is disabled).
- There must be no warnings.
- The parameters must not be write prohibited.
- The SERVOPACK electronic gear ratio must be set according to the specifications in the host controller.

8.8.3 Applicable Tools

The following table lists the tools that you can use to perform autotuning with a host reference.

Tool	Fn No./Function Name	Operating Procedure Reference
Digital Operator	Fn202	📖 Σ-7/Σ-X-Series Digital Operator Operating Manual (Manual No.: SIEP S800001 33)
SigmaWin+	[Tuning] - [Tuning]	☞ *8.8.4 Operating Procedure on page 389*

Note:

Multi-axis simultaneous tuning can be executed in the SigmaWin+ only.

8.8.4 Operating Procedure

Use the following procedure to perform autotuning with a host reference.

NOTICE

If you set an electronic gear in the host controller, confirm that the SERVOPACK's electronic gear ratio conforms to the gear ratio specified by the host controller.

There is a risk of damage or injury.

1. **Confirm that the value of Pn103 (Moment of Inertia Ratio) is set correctly.**
2. **Click the [ ] button for the servo drive in the workspace of the Main Window of the SigmaWin+.**

   The [Menu] window will be displayed.

3. **Click [Tuning] in the [Tuning] area.**

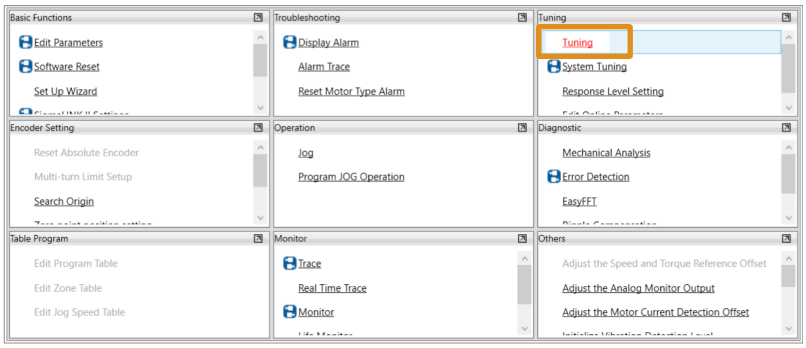

The [Tuning] window will be displayed.

4. **Read the warnings and then click the [Execute] button.**

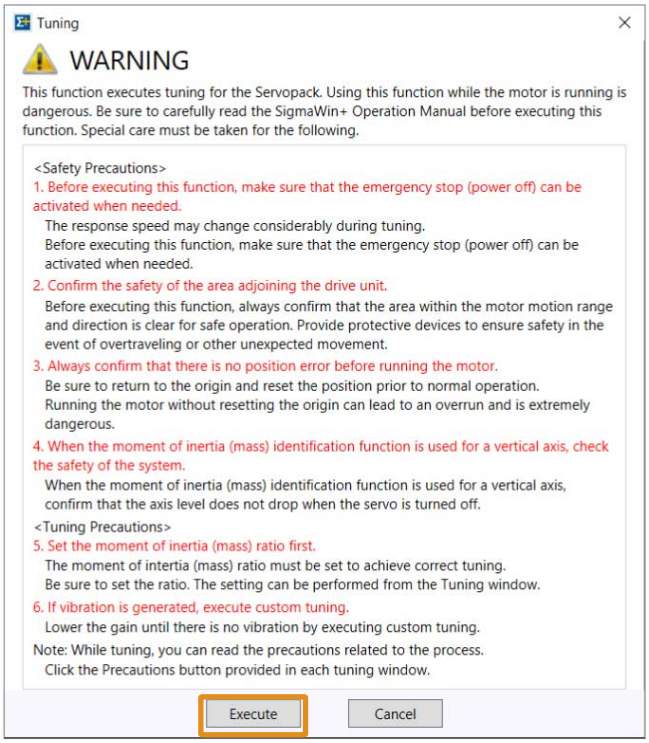

5. **Click [Position Reference Input] in [Reference input from host controller] and then click the [Autotuning] button.**

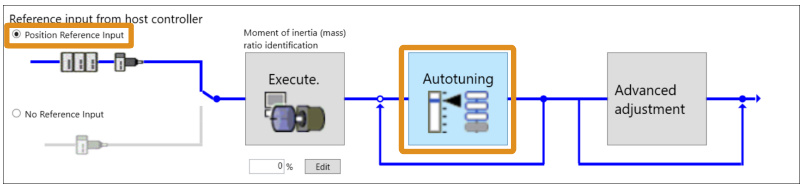

Information

When the following message dialog box is displayed, click the [OK] button and then confirm that Pn103 (Moment of Inertia Ratio) is set correctly.

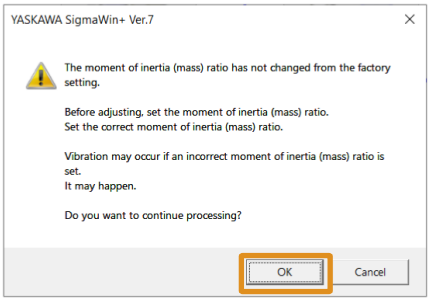

6. **Set the conditions, and then click the [Next] button.**

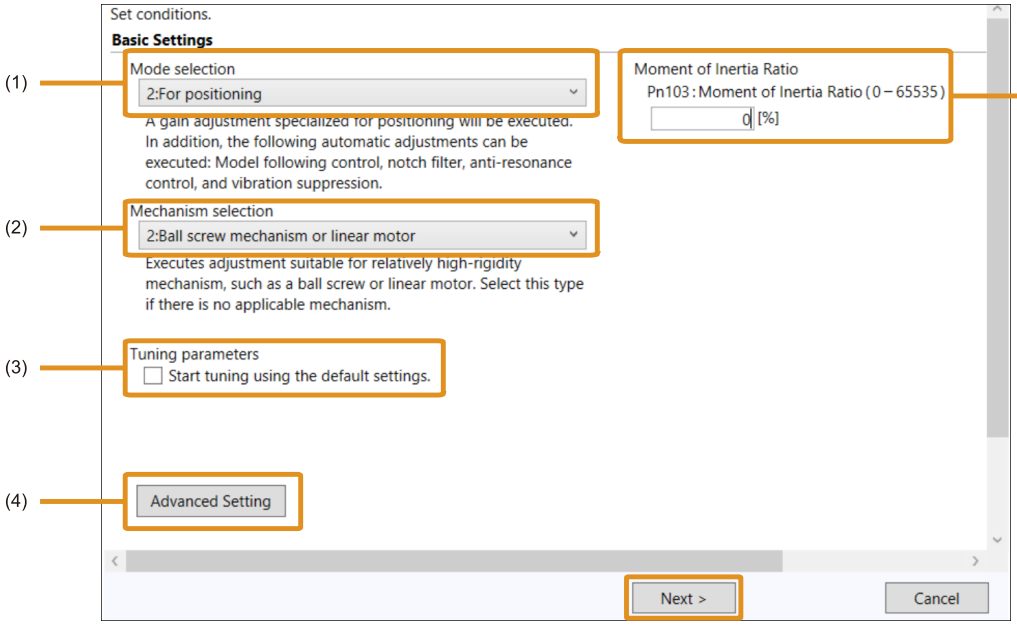

No.	Item	Meaning
(1)	[Mode selection]	Set the mode. For details on the options, refer to the explanations on the window.
(2)	[Mechanism selection]	Select the type according to the machine element to drive. If there is noise or if the gain does not increase, better results may be obtained by changing the rigidity type. For details on the options, refer to the explanations on the window.
(3)	[Tuning parameters]	Specify the parameters to use for tuning. If you select [Start tuning using the default settings], the tuning parameters will be returned to the default settings before tuning is started.
(4)	[Advanced Setting] button	Click this button to display the [Advanced Setting] window on which you can set the details of tuning conditions. Configure detailed tuning conditions in the following cases: • To tune a higher response than the tuning results • When tuning fails with a large amount of overshoot • To tune with speed I-P control 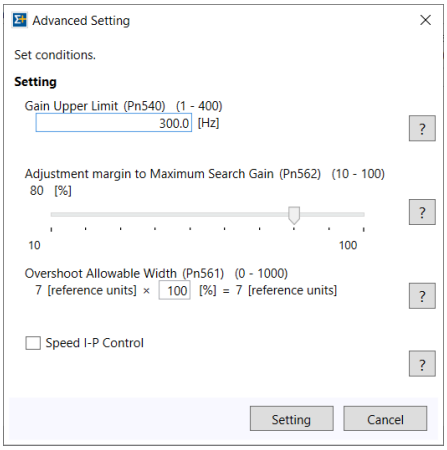
(5)	[Moment of Inertia Ratio]	Change the settings as required.

7. **Turn ON the servo, enter a reference from the host controller, and then click the [Start tuning] button.**

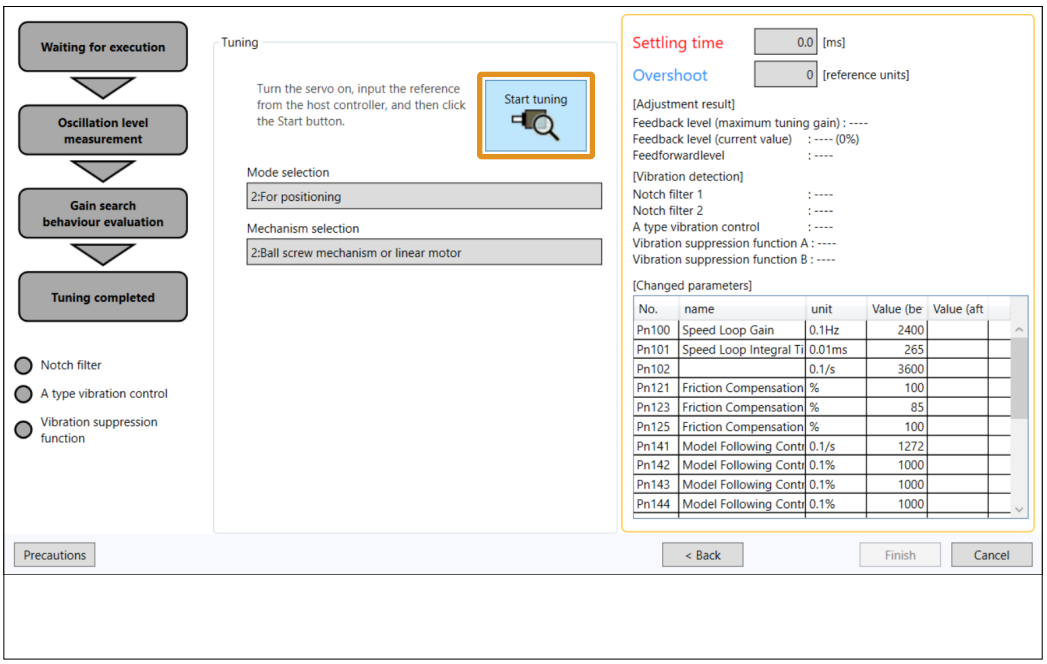

8. **Confirm safety around moving parts and click the [Yes] button.**

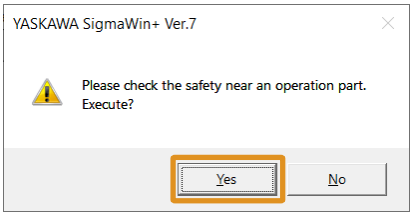

Tuning will be executed.

Vibration that occurs during tuning will be detected automatically and suitable settings will be made for that vibration. The content to set will be displayed on the right side of the window. When the settings have been completed, the indicators for the functions that were used will light at the lower left of the window.

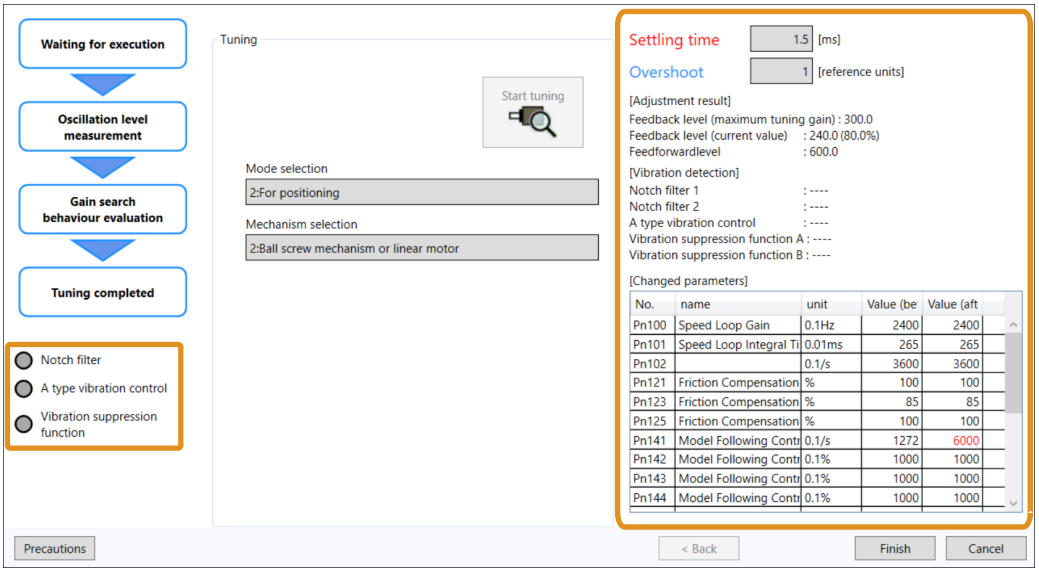

Details on the content to set are shown below.

Item	Meaning
[Settling time]	Displays the settling time by the tuning results.
[Overshoot]	Displays the maximum overshoot by the tuning results.
[Feedback level (maximum tuning gain)]	Displays the maximum value of Pn100 (Speed Loop Gain) during tuning. In mode selection, if using “Load Fluctuation Priority”, the maximum value for Pn174 (Load Fluctuation Compensation Control Response Level) will be displayed.
[Feedback level (current value)]	Displays the value of Pn100 (Speed Loop Gain) after tuning. The number in parentheses is the percentage of adjusting maximum gain. In mode selection, if using “Load Fluctuation Priority”, the current value for Pn174 (Load Fluctuation Compensation Control Response Level) will be displayed.
[Feedforward level]	Displays the value of Pn141 (Model Following Control Gain) after tuning.
[Notch filter 1] [Notch filter 2]	Displays the frequencies set by the notch filters. "——" is displayed if not set.
[A type vibration control]	Displays the frequency set by anti-resonance control. "——" is displayed if not set.
[Vibration suppression function A] [Vibration suppression function B]	Displays the frequencies set by vibration suppression. "——" is displayed if not set.

9. **When tuning has been completed, click the [Finish] button.**

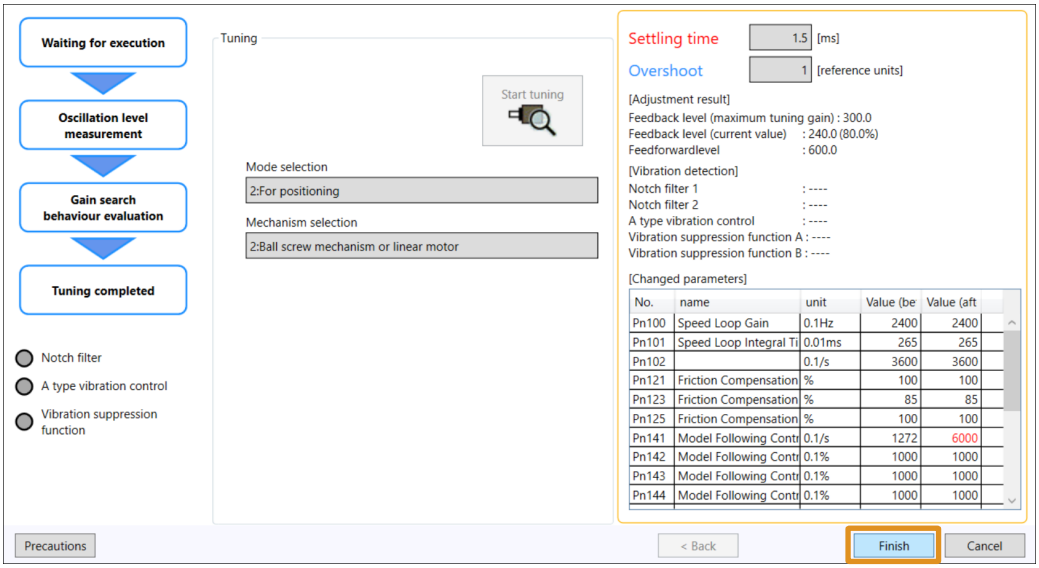

The results of tuning will be set in the parameters and you will return to the [Tuning] window.

This concludes the procedure to perform autotuning with a host reference.

8.8.5 Operating Procedure for Multi-Axis Simultaneous Tuning

Multi-axis simultaneous tuning (host reference) is a function you can use to tune multiple axes at the same time.

The conditions for using this function are:

- Two or more axes are connected to the SERVOPACK.
- The software version of the SERVOPACK is Ver. 0009 or later.

Use the following procedure to perform multi-axis simultaneous tuning.

NOTICE

If you set an electronic gear in the host controller, confirm that the SERVOPACK's electronic gear ratio conforms to the gear ratio specified by the host controller.

There is a risk of damage or injury.

1. **Confirm that the value of Pn103 (Moment of Inertia Ratio) is set correctly.**

2. **Click the [ ] button for the servo drive in the workspace of the Main Window of the SigmaWin+.**

   The [Menu] window will be displayed.

3. **Click [Multi-Axis Simultaneous Tuning] in the [Tuning] area.**

   The [Multi-Axis Simultaneous Tuning] window will be displayed.

   Information Multi-axis simultaneous tuning cannot be executed if there is only one online SERVOPACK axis displayed in the workspace.

4. **Read the warnings and then click the [Execute] button.**

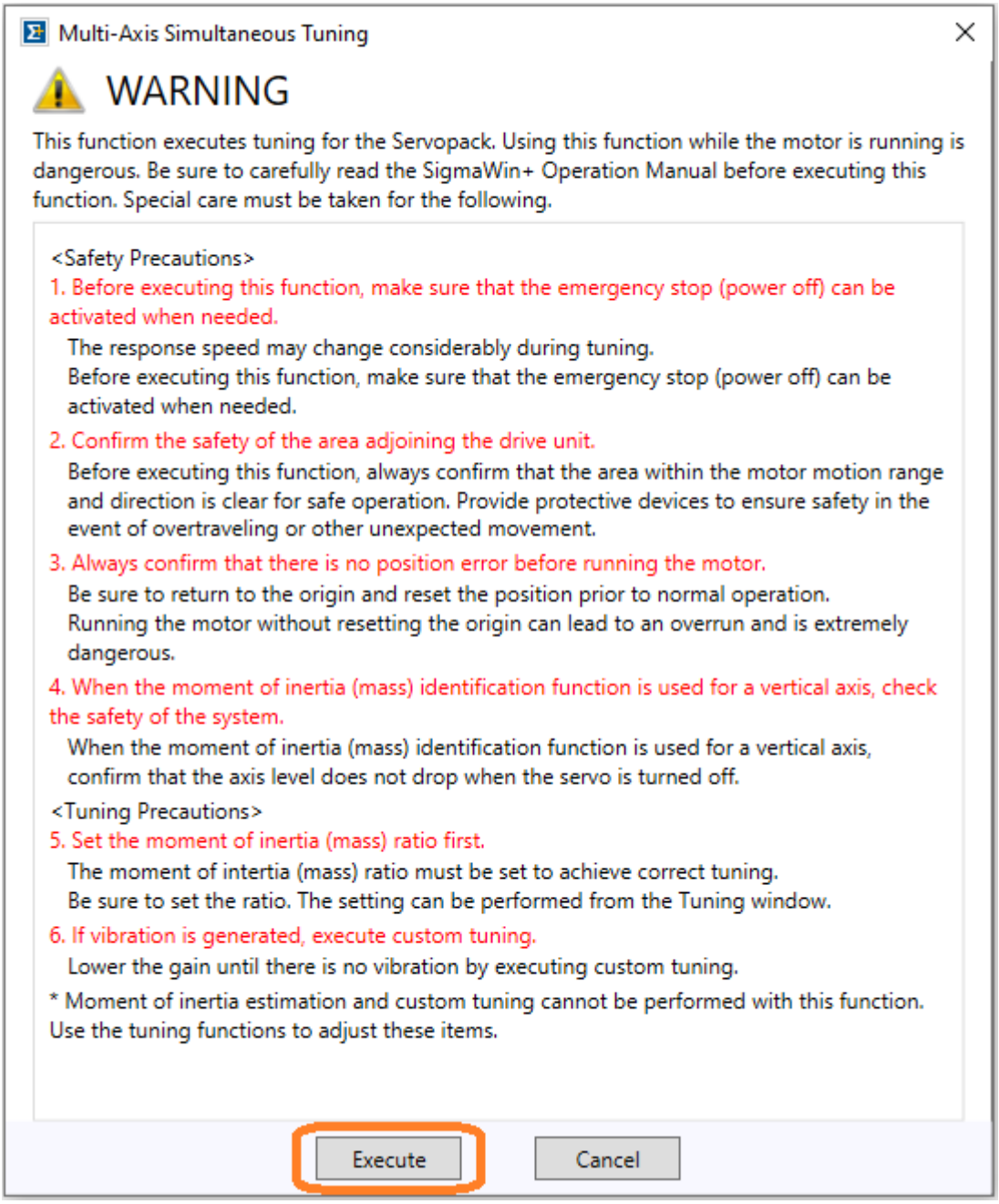

5. **Configure the following screen's settings, and then click the [Next] button.**

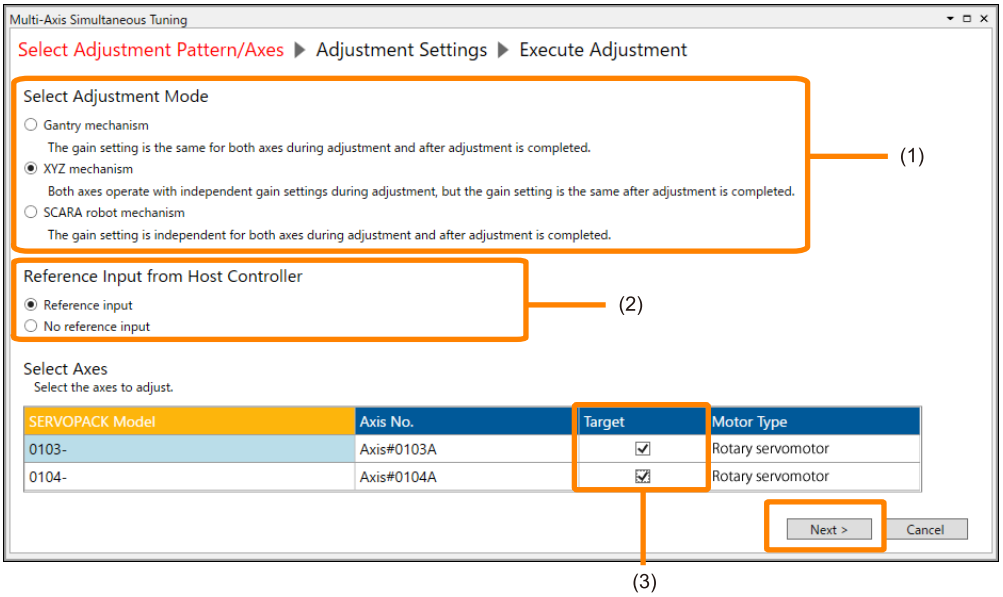

No.	Item	Meaning
(1)	[Select Adjustment Mode]	Select the tuning mode to comply with the mechanism. For details on the options, refer to the explanations on the window. **Note:** Gantry mechanisms and XYZ mechanisms are not compatible with SERVOPACKs with software versions before 000B.
(2)	[Reference Input from Host Controller]	Select whether references are or are not sent (= the SERVOPACK will automatically operate) to the SERVOPACK from the host controller during tuning.
(3)	[Target]	Select the [Target] check box for the axes to tune. **Note:** Axes displayed in gray cannot be selected as they are not compatible with the selected tuning mode.

Information Tunable axes and axis numbers will differ depending on the connected SERVOPACK and selected tuning mode.

6. **Set each tuning mode as shown below.**

Gantry Mechanism

Check the [Reference Input Axis] for the axis you want to reference, and click the [Setting] button.

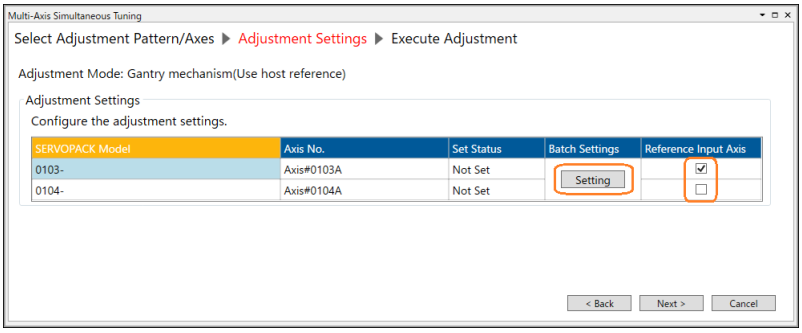

XYZ Mechanism

Click the [Batch Settings] column's [Setting] button.

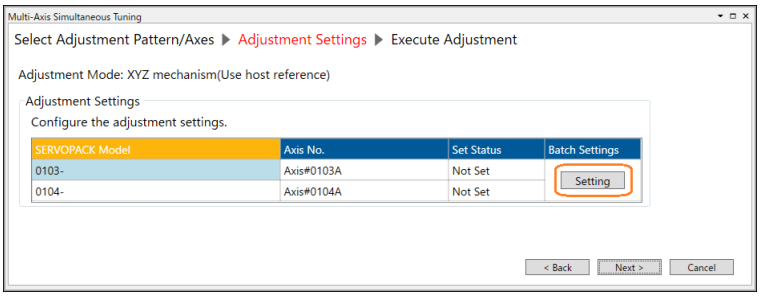

SCARA Robot Mechanism

If setting conditions for all axes in a batch, click the [Batch Settings] column's [Setting] button. If setting conditions individually, click the [Individual Settings] area.

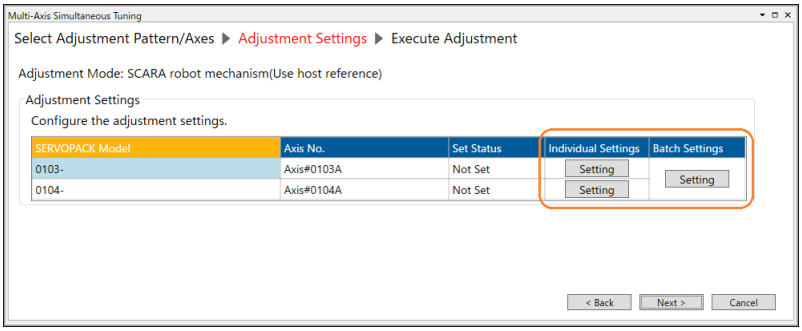

7. Set the conditions, and then click the [Setting] button.

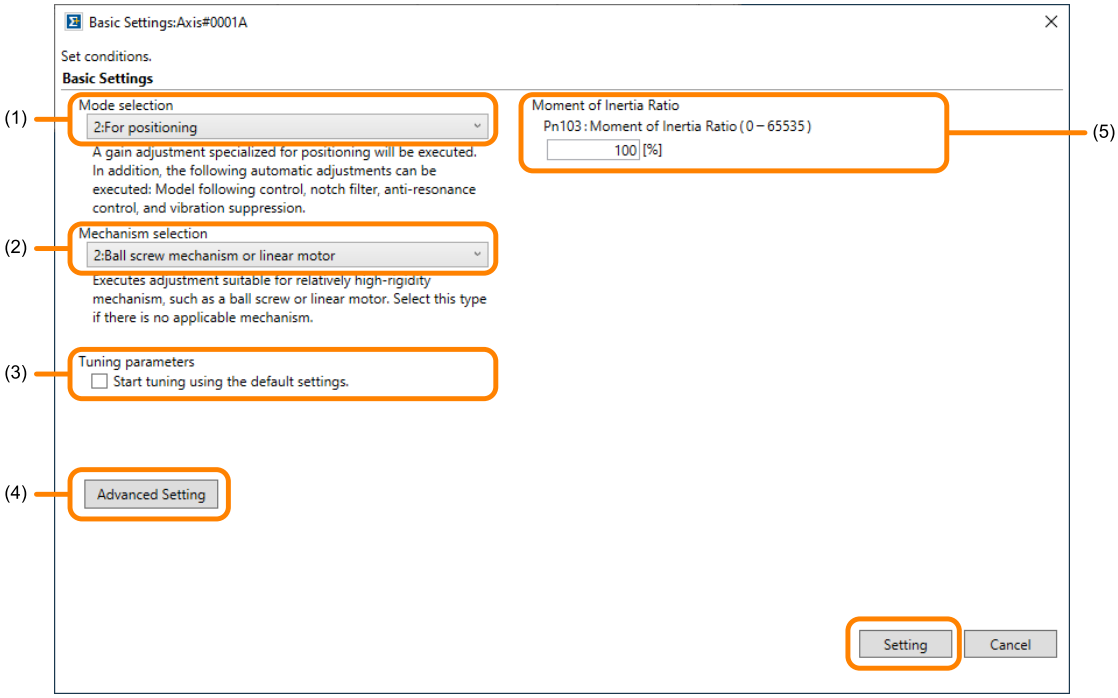

No.	Item	Meaning
(1)	[Mode selection]	Set the mode. For details on the options, refer to the explanations on the window.
(2)	[Mechanism selection]	Select the type according to the machine element to drive. If there is noise or if the gain does not increase, better results may be obtained by changing the rigidity type. For details on the options, refer to the explanations on the window.
(3)	[Tuning parameters]	Specify the parameters to use for tuning. If you select [Start tuning using the default settings], the tuning parameters will be returned to the default settings before tuning is started.

Continued on next page.

Continued from previous page.

No.	Item	Meaning
(4)	[Advanced Setting] button	Click this button to display the [Advanced Setting] window on which you can set the details of tuning conditions. Configure detailed tuning conditions in the following cases: • To tune a higher response than the tuning results • When tuning fails with a large amount of overshoot • To tune with speed I-P control 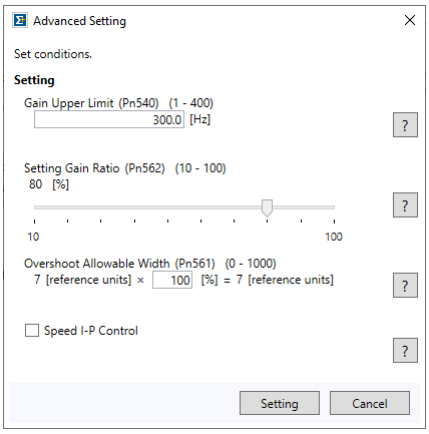
(5)	[Moment of Inertia Ratio]	Change the settings as required. For batch settings, the moment of inertia ratio cannot be set here because the setting of each axis will be used. Confirm that the value of Pn103 (Moment of Inertia Ratio) is correct, and then execute tuning.

8. **Confirm that [Set Status] for all axes has changed to [Set], and then click the [Next] button.**

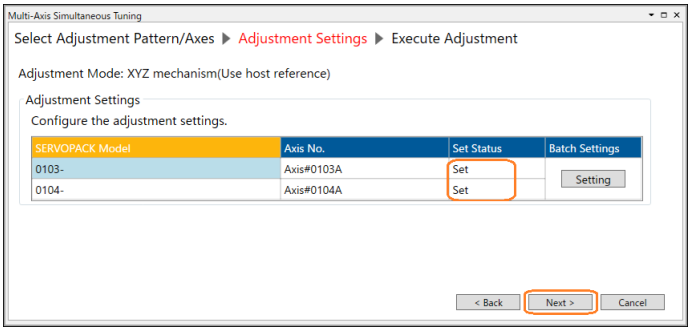

9. **Turn ON the servo, enter a reference from the host controller, and then click the [Start tuning] button.**

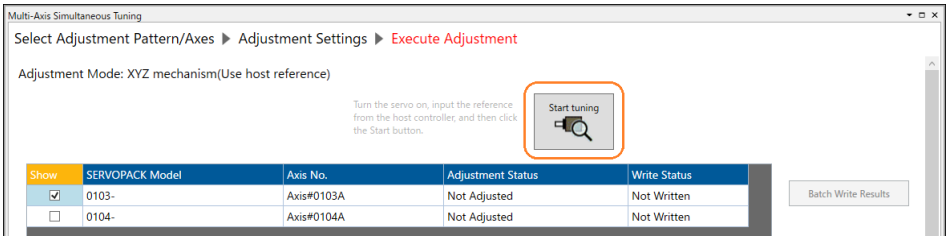

Important

If using a Gantry mechanism, input simultaneous references for both axes from the host reference.

10. **Confirm safety around moving parts and click the [Yes] button.**

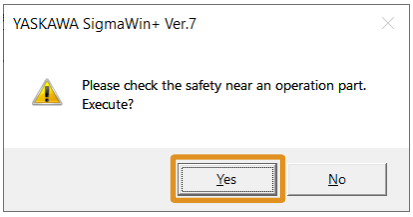

The servomotor shaft will rotate and tuning will start.

Vibration that occurs during tuning will be detected automatically and suitable tuning for that vibration will be performed. The tuned content will be displayed in the window.

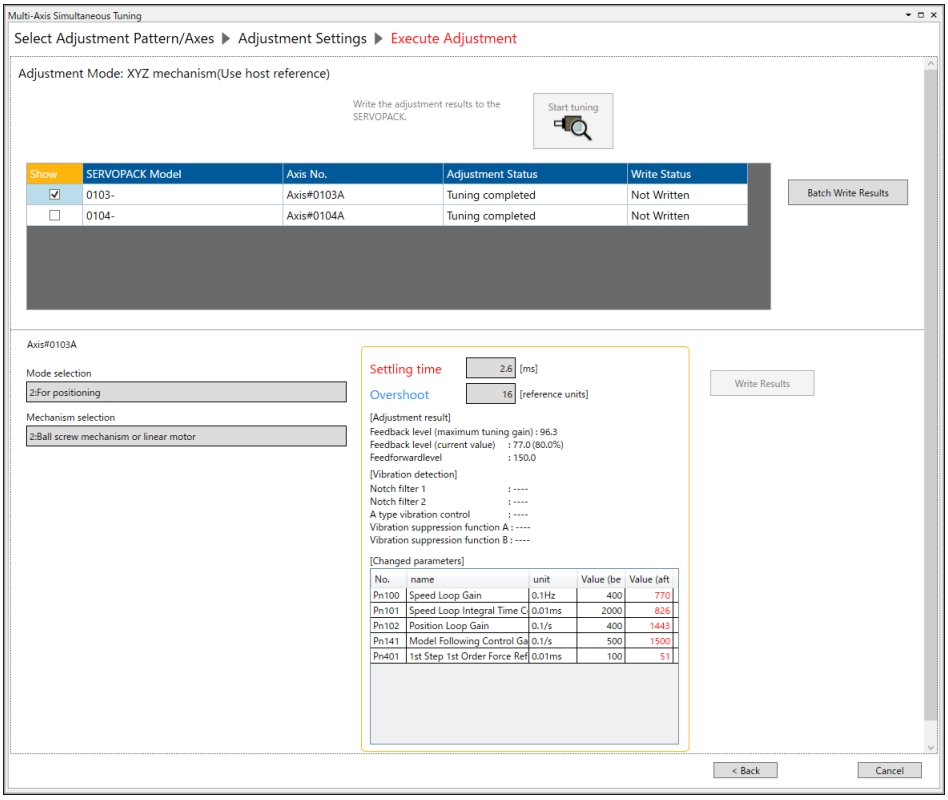

Details on the tuned content are shown below.

Item	Meaning
[Settling time]	Displays the settling time by the tuning results.
[Overshoot]	Displays the maximum overshoot by the tuning results.
[Feedback level (maximum tuning gain)]	Displays the maximum value of Pn100 (Speed Loop Gain) during tuning.
[Feedback level (current value)]	Displays the value of Pn100 (Speed Loop Gain) after tuning. The number in parentheses is the percentage of adjusting maximum gain.
[Feedforward level]	Displays the value of Pn141 (Model Following Control Gain) after tuning.
[Notch filter 1] [Notch filter 2]	Displays the frequencies set by the notch filters. "——" is displayed if not set.
[A type vibration control]	Displays the frequency set by anti-resonance control. "——" is displayed if not set.
[Vibration suppression function A] [Vibration suppression function B]	Displays the frequencies set by vibration suppression. "——" is displayed if not set.

If tuning is completed normally, "Tuning completed" will be displayed in the [Adjustment Status] area.

11. **Click the [Batch Write Results] button.**

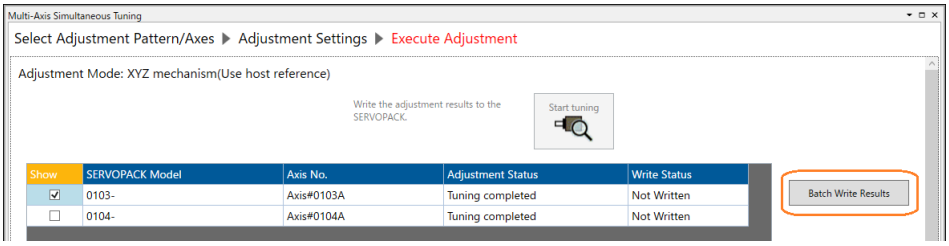

Information If using SCARA robot mechanism, tuning results for the axes that were optionally selected can be written individually. Select the [Show] check box for the axes to be written, and then click [Write Results] button.

12. **Confirm that [Write Status] is at "Writing Completed", and then click the [Finish] button.**

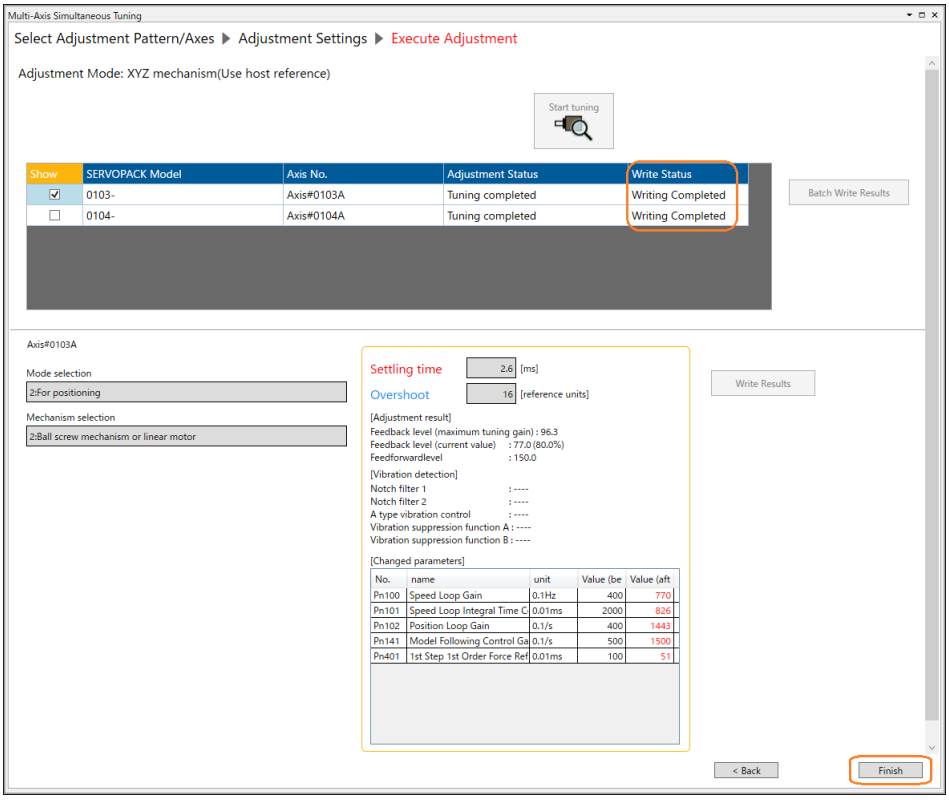

13. **Click the [OK] button.**

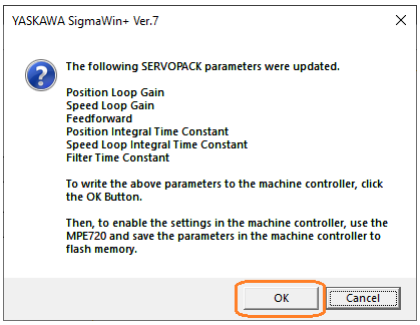

This concludes the procedure to perform multi-axis simultaneous tuning (host reference).

8.8.6 Troubleshooting Problems in Autotuning with a Host Reference

The following tables give the causes of and corrections for problems that may occur in autotuning with a host reference.

(1) Autotuning with a Host Reference Was Not Performed

Possible Cause	Corrective Action
Main circuit power is OFF.	Turn ON the main circuit power.
An alarm or warning occurred.	Remove the cause of the alarm or warning.
Overtraveling occurred.	Remove the cause of overtraveling.
Gain 2, gain 3, or gain 4 was selected with the gain selection.	Disable automatic gain switching and select gain 1.
The HWBB was activated.	Release the HWBB.

(2) Troubleshooting Errors

Error	Possible Cause	Corrective Action
The gain adjustments were not successfully completed.	Machine vibration occurs or the positioning completion signal is not stable when the servomotor stops.	• On the [Detailed Setting] window, increase the setting of Pn561 (Overshoot Detection Level). • Increase the setting of Pn522 (Positioning Completed Width). • On the [Detailed Setting] window, decrease the setting of Pn562 (Setting Gain Ratio). • Change the mode from 2 to 3. • If machine vibration occurs, suppress the vibration with the anti-resonance control adjustment and the vibration suppression function.
Positioning was not completed within approximately 10 seconds after position adjustment was completed.	The positioning completed width is too narrow or proportional control is being used.	• Increase the setting of Pn522 (Positioning Completed Width).

(3) Adjustment Results Are Not Satisfactory for Position Control

Configuring parameters as shown below may improve the adjustment results.

- Change Pn522 (Positioning Completed Width) and the Position User Unit (2701h).
- Adjust Pn561 (Overshoot Detection Level).
  You can change these parameters on the [Adjustment Settings] window. Details on the settings of Pn561 are shown below.

Setting of Pn561	Meaning
0% to 99%	This will allow tuning to be performed without overshooting within the positioning completed width, but the positioning completed width may be extended.
100% (default setting)	This will allow tuning with overshooting that is equivalent to the positioning completed width.
101% to 1000%	The settings that allow overshooting to exceed the positioning completed width. Adjust Pn561 (Overshoot Detection Level) without changing the positioning completed width. Increase this setting when high responsiveness is required even if overshooting increases.

- Increase the upper limits for tuning.
  However, the changes in these settings are valid only when the tuning results are Pn100 = 2400 [0.1 Hz] (speed loop gain = 240 Hz) and Pn141 = 6000 [0.1/s] (model following control gain = 600/s). If you increase the upper limits of tuning at this time, you may be able to further decrease the settling time.
  You can change the upper limits of tuning on the [Detailed Setting] window. Set the parameters as shown below.
  – Pn540 = 3000 [0.1 Hz] or higher (maximum search gain = 300 Hz [default setting] or higher)
  – Pn562 = 80 [%] or higher (setting gain ratio = 80% [default setting] or higher)

8.8.7 Automatically Adjusted Function Setting

These function settings are the same as for autotuning without a host reference. Refer to the following section.

☞ *8.7.7 Automatically Adjusted Function Setting on page 384*

8.8.8 Related Parameters

The following parameters are automatically adjusted or used as reference when you execute autotuning with a host reference.

Do not change the settings while autotuning with a host reference is being executed.

Parameter	Name	Automatic Changes
Pn100 (2100h)	Speed Loop Gain	Yes
Pn101 (2101h)	Speed Loop Integral Time Constant	Yes
Pn102 (2102h)	Position Loop Gain	Yes
Pn103 (2103h)	Moment of Inertia Ratio	No
Pn121 (2121h)	Friction Compensation Gain	Yes
Pn123 (2123h)	Friction Compensation Coefficient	Yes
Pn124 (2124h)	Friction Compensation Frequency Correction	No
Pn125 (2125h)	Friction Compensation Gain Correction	Yes
Pn401 (2401h)	First Stage First Torque Reference Filter Time Constant	Yes
Pn408 (2408h)	Torque-Related Function Selections	Yes
Pn409 (2409h)	First Stage Notch Filter Frequency	Yes
Pn40A (240Ah)	First Stage Notch Filter Q Value	Yes
Pn40C (240Ch)	Second Stage Notch Filter Frequency	Yes
Pn40D (240Dh)	Second Stage Notch Filter Q Value	Yes
Pn140 (2140h)	Model Following Control-Related Selections	Yes
Pn141 (2141h)	Model Following Control Gain	Yes
Pn142 (2142h)	Model Following Control Gain Correction	Yes
Pn143 (2143h)	Model Following Control Bias in the Forward Direction	Yes
Pn144 (2144h)	Model Following Control Bias in the Reverse Direction	Yes
Pn145 (2145h)	Vibration Suppression 1 Frequency A	Yes
Pn146 (2146h)	Vibration Suppression 1 Frequency B	Yes
Pn147 (2147h)	Model Following Control Speed Feedforward Compensation	Yes
Pn14F (214Fh) = n.□□□X	Model Following Control Type Selection	Yes
Pn160 (2160h)	Anti-Resonance Control-Related Selections	Yes
Pn161 (2161h)	Anti-Resonance Frequency	Yes
Pn163 (2163h)	Anti-Resonance Damping Gain	Yes
Pn173 (2173h)	Load Fluctuation Compensation Control-Related Selections	Yes
Pn174 (2174h)	Load Fluctuation Compensation Control Response Level	Yes

Yes: The parameter is automatically set.

No: The parameter is not automatically set, but the setting is read during execution.

8.9 Custom Tuning

This section describes custom tuning.

8.9.1 Outline

You can use custom tuning to manually adjust the servo during operation using a speed or position reference input from the host controller. You can use it to fine-tune adjustments that were made with autotuning.

The following items are adjusted automatically.

- Gains (e.g., speed loop gain, position loop gain, load fluctuation compensation response level)
- Filters (torque reference filter and notch filters)
- Friction compensation
- Anti-resonance control

Refer to the following section for details on the parameters that are adjusted.

☞ *8.9.7 Related Parameters on page 409*

There are the following adjustment methods that you can use for custom tuning.

Tuning Mode		Adjusting Method
0	Set servo gains with priority given to stability.	These modes allow you to set stable control conditions for multiple servo gains by manipulating only one tuning level. Automatic setting of notch filters and anti-resonance control is provided if vibration is detected. Manual anti-resonance control adjustment is also possible during custom tuning.
1	Set servo gains with priority given to response.	
2	Set servo gains for positioning application.	Two tuning levels are manipulated to reduce positioning time even further and set multiple servo gains. Model following control is used to reduce the positioning time. If vibration is detected, notch filters and anti-resonance control are automatically adjusted, and friction compensation is automatically set. Manual anti-resonance control adjustment and vibration suppression are also possible during custom tuning.
3	Set servo gains especially to prevent overshooting during positioning application.	
5	Set gain for Less-Deviation Control	Operate a single tuning level and adjust the Less-Deviation Control gain. This reduces position deviation during operations and can improve trajectory tracking. By combining with model following control, overshooting for positioning can be controlled.
6	Set servo gains for applications with large load fluctuations.	Load fluctuation compensation control is performed to suppress the variations in settling time that occur when the load fluctuates. In addition to gain adjustment, automatic setting of notch filters and anti-resonance control is provided.

⚠ CAUTION

Vibration or overshooting may occur during custom tuning. To ensure safety, make sure that you can perform an emergency stop at any time when you execute this function.

8.9.2 Preparations

Always check the following before you execute custom tuning.

- Pn00C must be set to n.□□□0 (Function Selection for Test without a Motor is disabled).
- Pn170 must be set to n.□□□0 (Tuning-less Selection is disabled).
- If speed control is used, tuning mode 0 or 1 must be set.
- The parameters must not be write prohibited.

8.9.3 Applicable Tools

The following table lists the tools that you can use to perform custom tuning.

Tool	Fn No./Function Name	Operating Procedure Reference
Digital Operator	Fn203	Σ-7/Σ-X-Series Digital Operator Operating Manual (Manual No.: SIEP S800001 33)
SigmaWin+	[Tuning] - [Tuning]	*8.9.4 Operating Procedure on page 403*

8.9.4 Operating Procedure

Use the following procedure to perform custom tuning.

⚠ CAUTION

Before you execute custom tuning, check the information provided in the SigmaWin+ operating manual. Observe the following precautions.

- **Make sure that you can perform an emergency stop at any time when you execute this function. When custom tuning is started, several parameters will be overwritten with the recommended settings, which may greatly affect the response before and after execution. Make sure that you can perform an emergency stop at any time.**
- **Set the moment of inertia correctly before you execute this function. If the setting greatly differs from the actual moment of inertia, vibration may occur.**
- **If you change the feedforward level, the new setting will not be used immediately. It will be used after positioning is completed.**

1. **Confirm that the value of Pn103 (Moment of Inertia Ratio) is set correctly.**
2. **Click the [ ] button for the servo drive in the workspace of the Main Window of the SigmaWin+.**

   The [Menu] window will be displayed.
3. **Click [Tuning] in the [Tuning] area.**

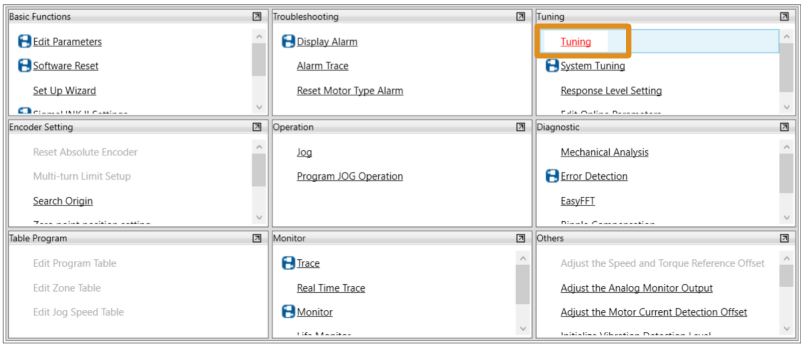

The [Tuning] window will be displayed.

4. **Read the warnings and then click the [Execute] button.**

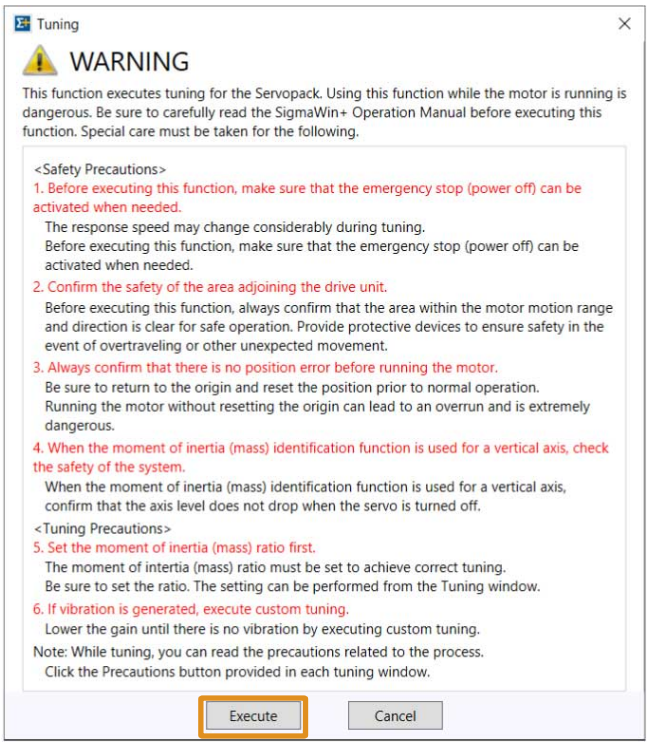

5. **Click the [Advanced adjustment] button.**

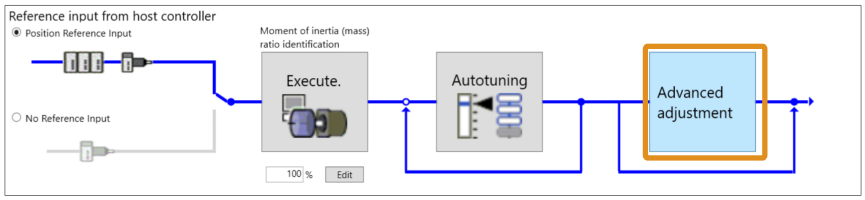

Information

When the following message dialog box is displayed, click the [OK] button and then confirm that Pn103 (Moment of Inertia Ratio) is set correctly.

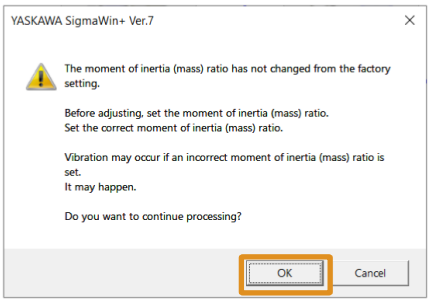

6. **Click the [Custom tuning] button.**

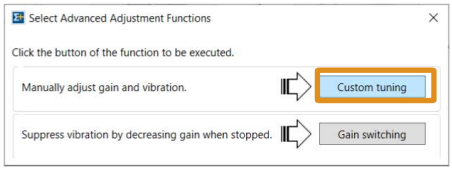

The [Custom Tuning] window will be displayed.

7. **Select [Tuning mode], [Mechanism selection], and [Option], and then click the [Next] button.**

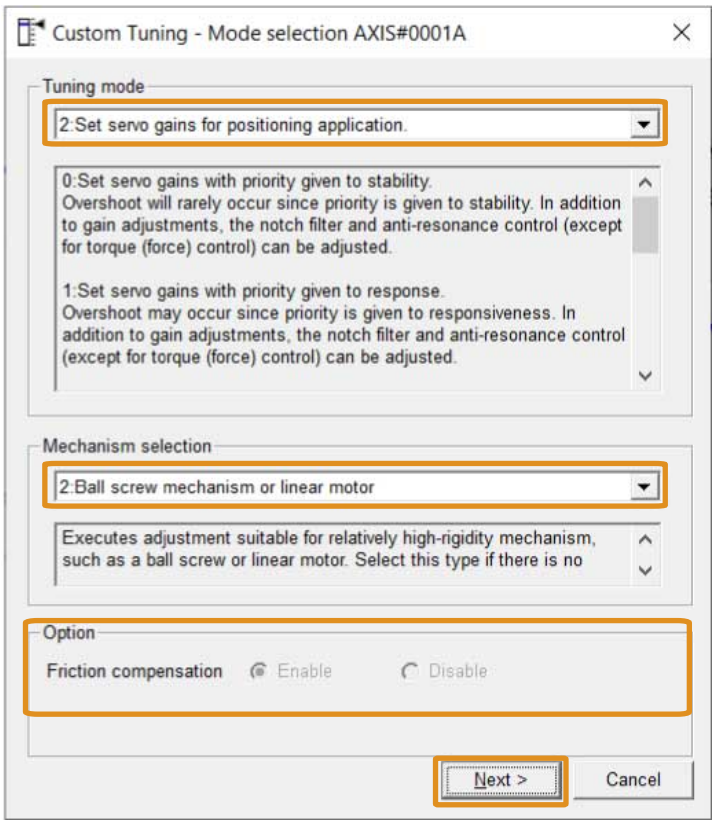

For details on [Tuning mode] and [Mechanism selection], refer to the explanations on the above window.

The content displayed in [Option] changes according the selection of [Tuning mode].

8. **If the moment of inertia ratio is not set correctly, correct the setting and then click the [Next] button.**

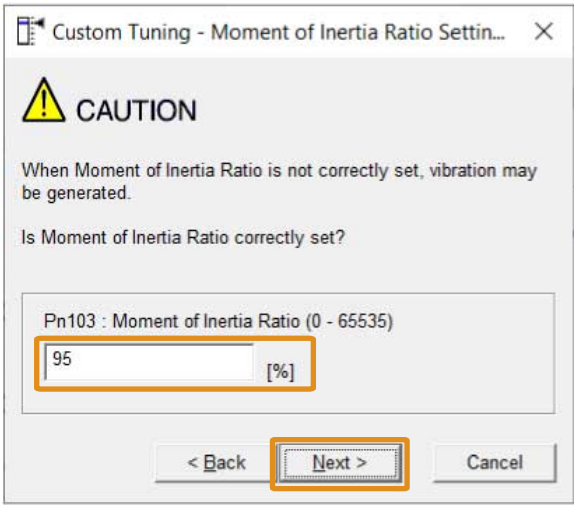

9. **Turn ON the servo, enter a reference from the host controller, and then click the [Start tuning] button.**

Tuning Mode 0, 1, 5, or 6	Tuning Mode 2 or 3
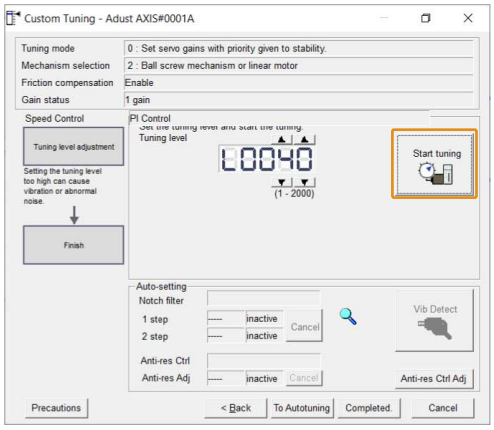	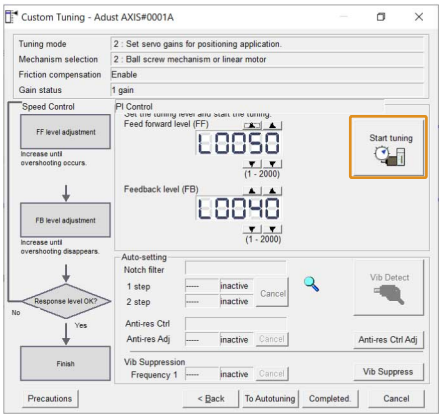

10. **Use the [▲] and [▼] buttons to change the tuning level.**

Click the [Back] button during tuning to restore the setting to its original value. The tuning level will return to the value from before when custom tuning was started.

Tuning Mode 0, 1, 5, or 6	Tuning Mode 2 or 3
Increase the tuning level until overshooting occurs. 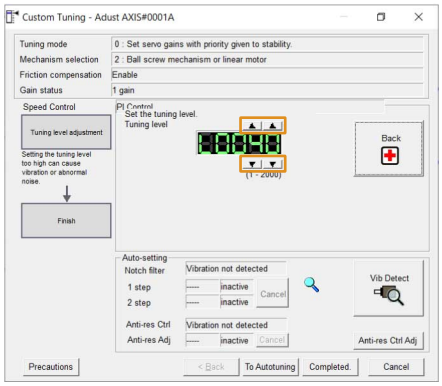	Increase the feedforward level until overshooting occurs and then increase the feedback level until overshooting is eliminated. Repeat these changes to make the adjustment. The new feedforward level will not be used until the positioning completed signal is output. 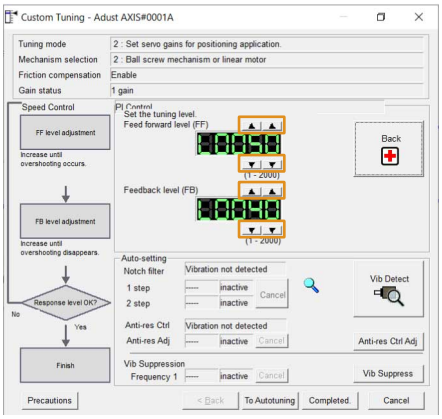

11. **You can set the functions to suppress vibration (notch filters, automatic anti-resonance control setting, anti-resonance control adjustment, and autotuning with a host reference) as required.**

Refer to the following section for details.

☞ *(1) Vibration Suppression Functions on page 407*

12. **When tuning has been completed, click the [Completed] button.**

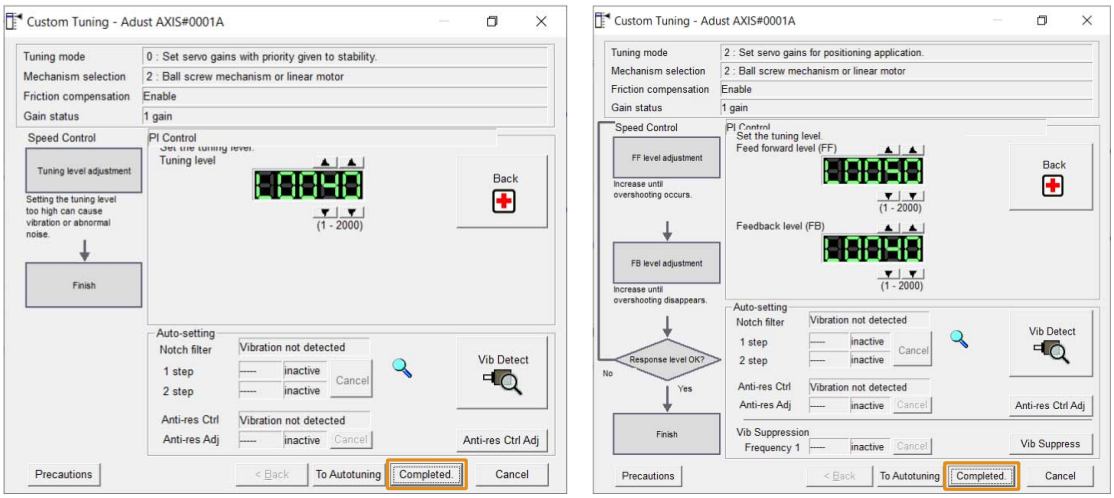

The values that were changed will be saved in the SERVOPACK and you will return to the [Tuning] window.

This concludes the procedure to set up custom tuning.

(1) Vibration Suppression Functions

(a) Notch Filters and Automatic Anti-resonance Control Setting

If the vibration frequency that occurs when you increase the servo gains is at 1000 Hz or higher, notch filters are effective to suppress vibration. If the vibration is between 100 Hz and 1000 Hz, anti-resonance control is effective.

(b) Automatic Setting

To set vibration suppression automatically, use the parameters to enable notch filters and automatic anti-resonance control setting.

The notch filter frequency (stage 1 or 2) or anti-resonance control frequency that is effective for the vibration that was detected during tuning will be automatically set.

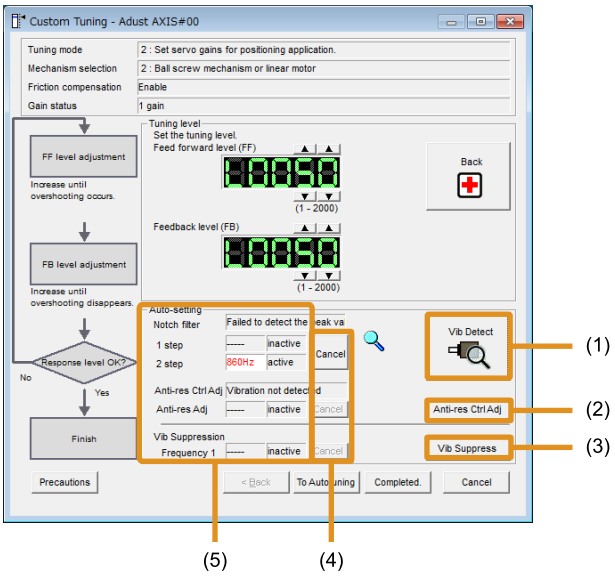

No.	Item	Meaning
(1)	[Vib Detect] button	While the notch filter or automatic anti-resonance control setting function is enabled, you can click the [Vib Detect] button to manually detect vibration. When you click the [Vib Detect] button, the SERVOPACK will detect vibration at that time, and set the notch filter frequency (stage 1 or 2) or anti-resonance control frequency that is effective for the detected vibration. You can also perform manual vibration detection even when the SERVOPACK does not detect vibration.
(2)	[Anti-res Ctrl Adj] button	You can use the [Anti-res Ctrl Adj] button to execute the anti-resonance control adjustment if fine-tuning is required. Refer to the following section. ☞ *8.10 Anti-Resonance Control Adjustment on page 411*
(3)	[Vib Suppress] button	Click the [Vib Suppress] button to suppress low and transient vibration (oscillation) of approximately 1 Hz to 100 Hz that occurs during positioning. Refer to the following section. ☞ *8.11 Vibration Suppression on page 417*
(4)	[Cancel] buttons	The automatically set notch filter frequencies or the anti-resonance control frequencies may not always suppress vibration. Click the [Cancel] button to reset the notch filter frequencies or the anti-resonance control frequencies to the values from just before these frequencies were set automatically. When they are reset, vibration detection will start again.
(5)	[Auto-setting]	The usage status and frequencies of the automatically set notch filter, anti-resonance control, and vibration suppression are displayed here.

(c) Autotuning with a Host Reference

You can perform autotuning with a host reference. Refer to the following section for details.

☞ *8.8 Autotuning with a Host Reference on page 388*

8.9.5 Automatically Adjusted Function Setting

You cannot use vibration suppression functions at the same time. Other automatic function settings are the same as for autotuning without a host reference. Refer to the following section.

☞ *8.7.7 Automatically Adjusted Function Setting on page 384*

8.9.6 Tuning Example for Tuning Mode 2 or 3

Step	Measurement Display Examples	Operation
1	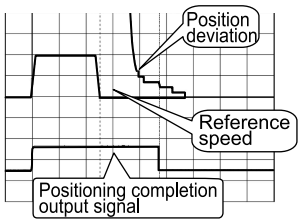	The positioning time is measured after Pn103 (Moment of Inertia Ratio) is set correctly. Tuning is completed if the specifications are met. The tuning results are saved in the SERVOPACK.
2	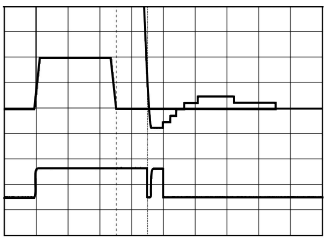	The positioning time will be reduced if the feedforward level is increased. Tuning is completed if the specifications are met. The tuning results are saved in the SERVOPACK. If overshooting occurs before the specifications are met, proceed to step 3.

Continued on next page.

Continued from previous page.

Step	Measurement Display Examples	Operation
3	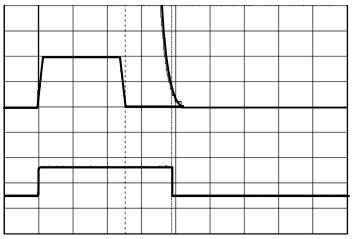	Overshooting will be reduced if the feedback level is increased. If the overshooting is eliminated, proceed to step 4.
4	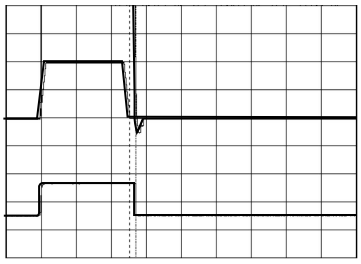	The graph shows overshooting that occurred when the feedforward level was increased even more after step 3. In this state, overshooting occurs, but the positioning settling time is shorter. Tuning is completed if the specifications are met. The tuning results are saved in the SERVOPACK. If overshooting occurs before the specifications are met, repeat steps 3 and 4. If vibration occurs before the overshooting is eliminated, the vibration is suppressed with the notch filters and anti-resonance control.
5	–	The tuning results are saved in the SERVOPACK.

8.9.7 Related Parameters

The following parameters are automatically adjusted or used as reference when you execute custom tuning. Do not change the settings while custom tuning is being executed.

Parameter	Name	Automatic Changes
Pn100 (2100h)	Speed Loop Gain	Yes
Pn101 (2101h)	Speed Loop Integral Time Constant	Yes
Pn102 (2102h)	Position Loop Gain	Yes
Pn103 (2103h)	Moment of Inertia Ratio	No
Pn121 (2121h)	Friction Compensation Gain	Yes
Pn123 (2123h)	Friction Compensation Coefficient	Yes
Pn124 (2124h)	Friction Compensation Frequency Correction	No
Pn125 (2125h)	Friction Compensation Gain Correction	Yes
Pn401 (2401h)	First Stage First Torque Reference Filter Time Constant	Yes
Pn408 (2408h)	Torque-Related Function Selections	Yes
Pn409 (2409h)	First Stage Notch Filter Frequency	Yes
Pn40A (240Ah)	First Stage Notch Filter Q Value	Yes
Pn40C (240Ch)	Second Stage Notch Filter Frequency	Yes
Pn40D (240Dh)	Second Stage Notch Filter Q Value	Yes
Pn140 (2140h)	Model Following Control-Related Selections	Yes
Pn141 (2141h)	Model Following Control Gain	Yes
Pn142 (2142h)	Model Following Control Gain Correction	Yes
Pn143 (2143h)	Model Following Control Bias in the Forward Direction	Yes
Pn144 (2144h)	Model Following Control Bias in the Reverse Direction	Yes
Pn145 (2145h)	Vibration Suppression 1 Frequency A	No

Continued on next page.

Continued from previous page.

Parameter	Name	Automatic Changes
Pn146 (2146h)	Vibration Suppression 1 Frequency B	No
Pn147 (2147h)	Model Following Control Speed Feedforward Compensation	Yes
Pn160 (2160h)	Anti-Resonance Control-Related Selections	Yes
Pn161 (2161h)	Anti-Resonance Frequency	Yes
Pn163 (2163h)	Anti-Resonance Damping Gain	Yes
Pn173 (2173h)	Load Fluctuation Compensation Control-Related Selections	Yes
Pn174 (2174h)	Load Fluctuation Compensation Control Response Level	Yes

Yes: The parameter is automatically set.

No: The parameter is not automatically set, but the setting is read during execution.

8.10 Anti-Resonance Control Adjustment

This section describes anti-resonance control.

8.10.1 Outline

Anti-resonance control increases the effectiveness of vibration suppression after custom tuning.

Anti-resonance control is effective for suppression of continuous vibration frequencies from 100 to 1000 Hz that occur when the servo gain is increased. Vibration can be eliminated by setting vibration frequencies through automatic detection or by manually setting them to adjust the damping gain. Input an operation reference and execute this function when there is vibration.

This function is automatically set by autotuning without a host reference or autotuning with a host reference. Use this function only if fine-tuning is required or readjustment is required as a result of a failure to detect vibration.

Perform custom tuning if required to increase the response after executing this function. If the servo gain is increased, e.g., when custom tuning is performed, vibration may occur again. If that occurs, execute this function again to fine-tune the parameters.

⚠ CAUTION

Related parameters will be set automatically when this function is executed. This may greatly affect the response before and after execution. Make sure that you can perform an emergency stop at any time.

Before you execute this function, set Pn103 (Moment of Inertia Ratio) correctly. If the setting greatly differs from the actual moment of inertia ratio, normal control of the machine may not be possible, and vibration may result.

Important

- This function detects vibration frequencies between 100 Hz and 1000 Hz. If the vibration frequency is not within this range, use custom tuning with tuning mode 2 selected to automatically set a notch filter or use vibration suppression.
- Vibration reduction can be made more effective by increasing the setting of Pn163 (Anti-Resonance Damping Gain), but the vibration may become larger if the damping gain is too high. Increase the damping gain by approximately 0% to 200% in 10% increments while checking the effect on vibration. If vibration reduction is still insufficient at a gain of 200%, cancel the setting, and lower the servo gain by using a different method, such as custom tuning.

8.10.2 Preparations

Always check the following before you execute anti-resonance control adjustment.

- Pn170 must be set to n.□□□0 (Tuning-less Selection is disabled).
- Pn00C must be set to n.□□□0 (Function Selection for Test without a Motor is disabled).
- The control method must not be set to torque control.
- The parameters must not be write prohibited.

8.10.3 Applicable Tools

The following table lists the tools that you can use to perform anti-resonance control adjustment.

Tool	Fn No./Function Name	Operating Procedure Reference
Digital Operator	Fn204	Σ-7/Σ-X-Series Digital Operator Operating Manual (Manual No.: SIEP S800001 33)
SigmaWin+	[Tuning] - [Tuning]	*8.10.4 Operating Procedure on page 412*

8.10.4 Operating Procedure

To execute this function, an operation reference is input, and the adjustment is executed while vibration is occurring.

The following methods can be used to execute this function.

- To automatically detect the vibration frequency
- To manually set the vibration frequency

Use the following procedure to perform anti-resonance control.

⚠ CAUTION

Before you execute anti-resonance control adjustment, check the information provided in the SigmaWin+ operating manual. Observe the following precautions.

- **Make sure that you can perform an emergency stop at any time when you execute this function. Parameters will be set automatically when this function is executed. This may greatly affect the response before and after execution. Make sure that you can perform an emergency stop (to turn OFF the power) at any time.**

Important

- Set the moment of inertia correctly before you execute this function.
  If the setting greatly differs from the actual moment of inertia, effective vibration reduction may not be possible.
- If you have already performed anti-resonance control adjustment and then you change the vibration frequency, the current anti-resonance control effect may be lost. Caution is particularly required when automatically detecting the vibration frequency.
- If effective vibration reduction is not achieved even after you execute this function, cancel the function and lower the servo gain by using a different method, such as custom tuning.
- Perform custom tuning separately if required to increase the response after executing this function.
  If the servo gain is increased, e.g., when custom tuning is performed, vibration may occur again. If that occurs, execute this function again to fine-tune the parameters.

1. **Perform steps 1 to 9 of the procedure for custom tuning. Refer to the following section for details.**

   ☞ *8.9.4 Operating Procedure on page 403*

2. **Click the [Anti-res Ctrl Adj] button.**

   The rest of the procedure depends on whether you know the vibration frequency.

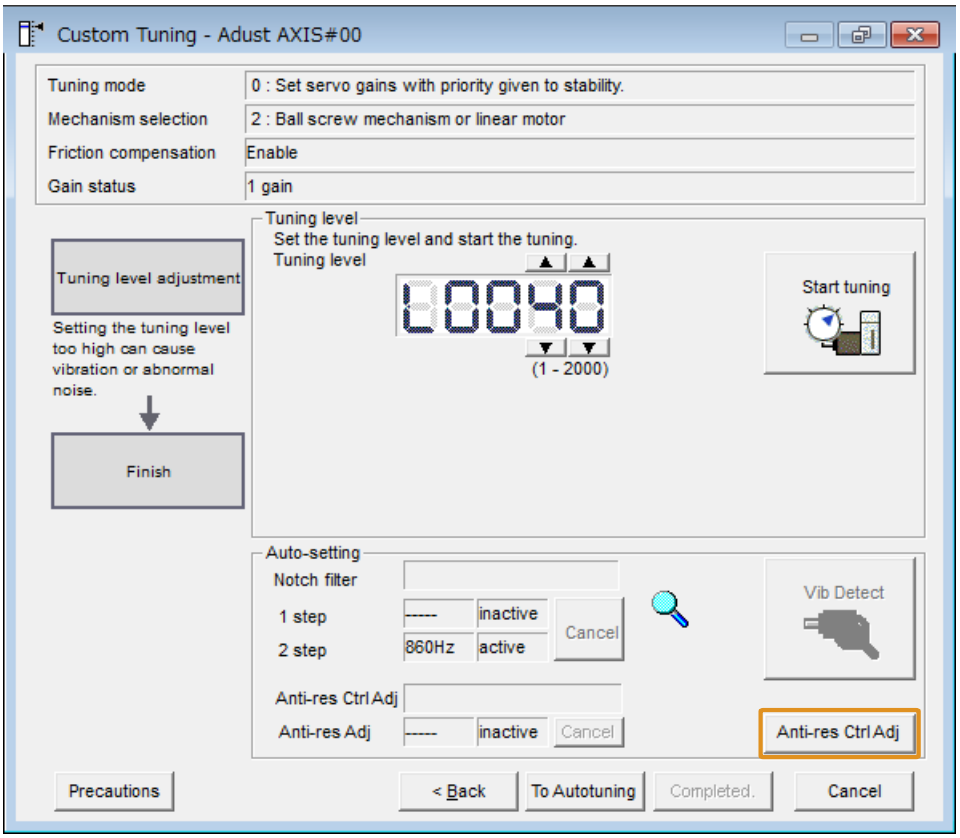

3. **If you do not know the vibration frequency, click the [Auto Detect] button. If you know the vibration frequency, click the [Manual Set] button.**

- To automatically detect the vibration frequency
  The frequency will be set.

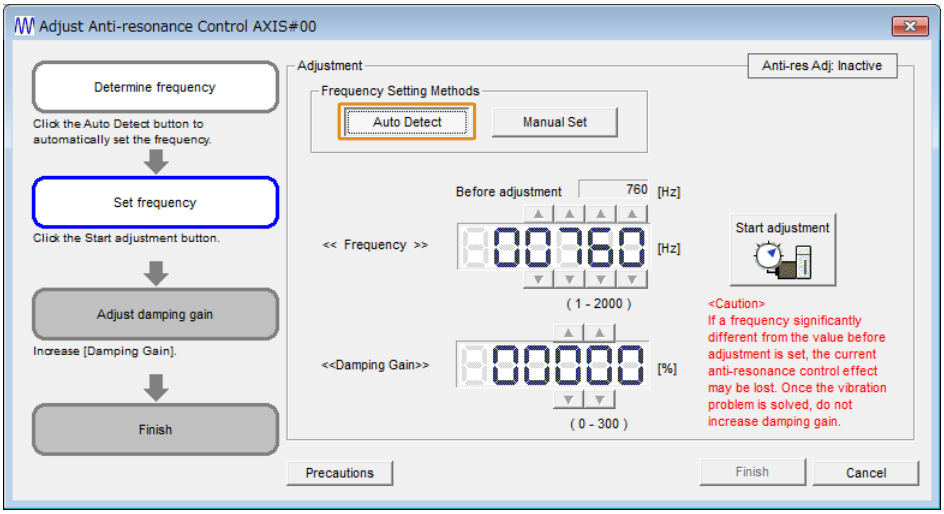

- To manually set the vibration frequency

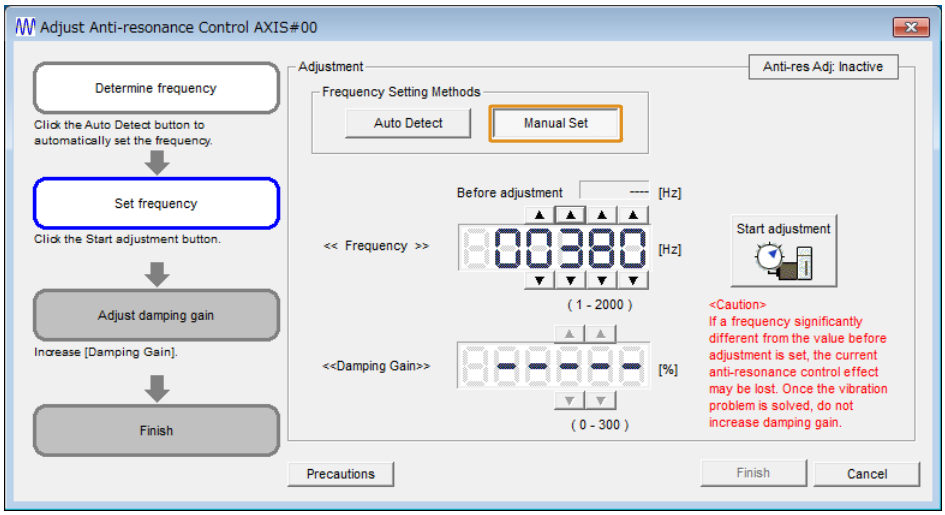

4. **Click the [Start adjustment] button.**

5. **Use the [▲] and [▼] buttons in [Adjustment] to change the settings.**

   Click the [Reset] button during tuning to restore the setting to its original value. The status from before when adjustment was started will be restored.

   - To automatically detect the vibration frequency
     Change the setting of the damping gain.

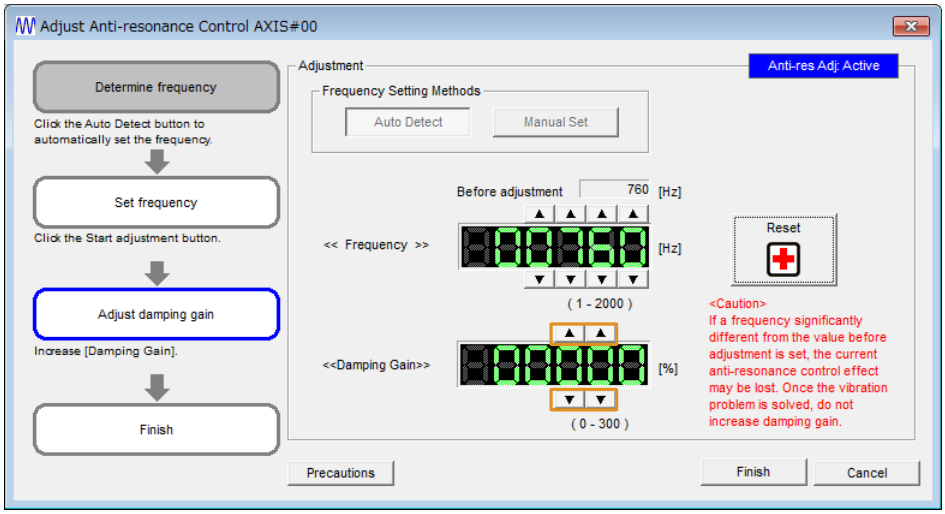

   - To manually set the vibration frequency
     Change the settings of the frequency and damping gain.

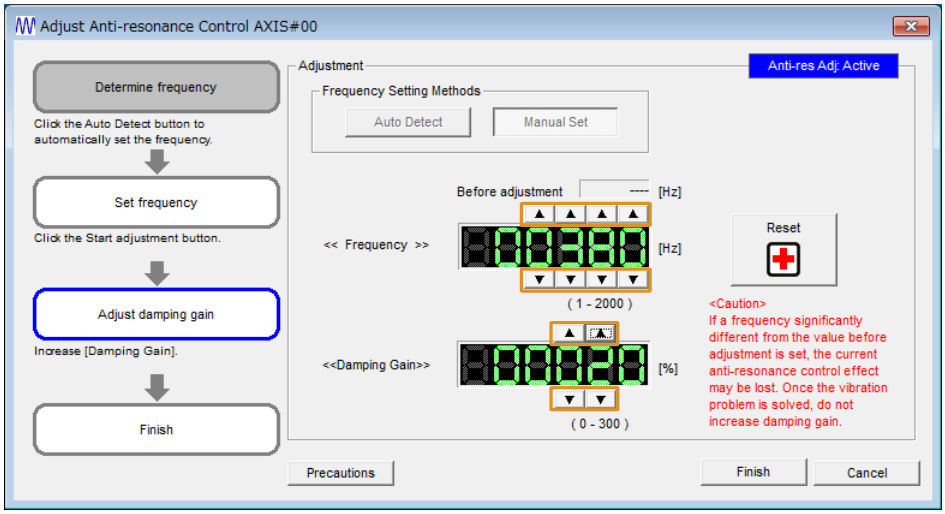

6. **When tuning has been completed, click the [Finish] button.**

   The values that were changed will be saved in the SERVOPACK and you will return to the [Tuning] window.

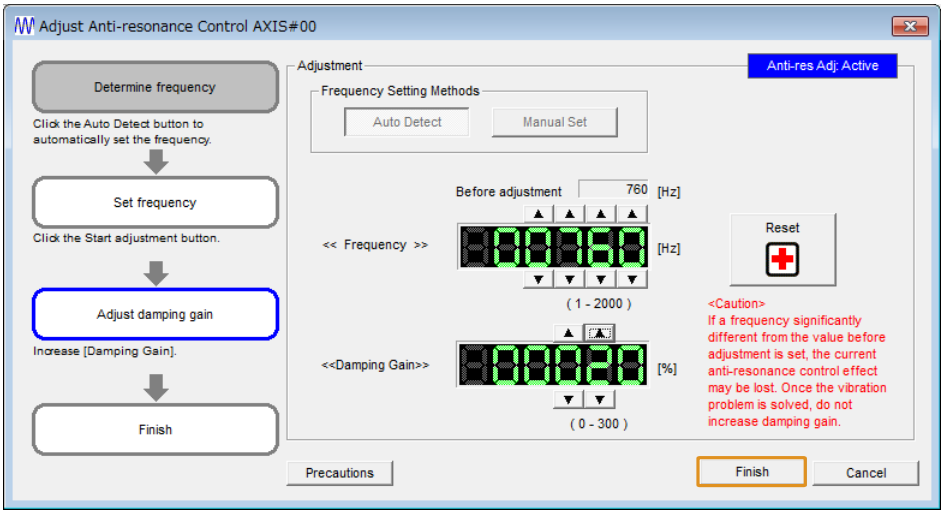

This concludes the procedure to set up anti-resonance control.

8.10.5 Related Parameters

The following parameters are automatically adjusted or used as reference when you execute anti-resonance control adjustment.

Do not change the settings while anti-resonance control adjustment is being executed.

Parameter	Name	Automatic Changes
Pn160 (2160h)	Anti-Resonance Control-Related Selections	Yes
Pn161 (2161h)	Anti-Resonance Frequency	Yes
Pn162 (2162h)	Anti-Resonance Gain Correction	No
Pn163 (2163h)	Anti-Resonance Damping Gain	Yes
Pn164 (2164h)	Anti-Resonance Filter Time Constant 1 Correction	No
Pn165 (2165h)	Anti-Resonance Filter Time Constant 2 Correction	Yes

Yes: The parameter is automatically set.

No: The parameter is not automatically set, but the setting is read during execution.

8.10.6 Suppressing Different Vibration Frequencies with Anti-resonance Control

When you use anti-resonance control and increase the servo gain, for some mechanism, vibration can occur at a higher frequency than the frequency for which vibration was suppressed. If this occurs, you can suppress vibration for more than one frequency by adjusting Pn166 (Anti-Resonance Damping Gain 2).

Information

Guidelines for Vibration That Can Be Suppressed

Pn161 (Anti-Resonance Frequency): fa [Hz], another vibration frequency that occurs when the servo gain is increased: fb [Hz]

- Vibration frequencies: 100 Hz to 1000 Hz
- Range of different vibration frequencies: $1 < (fb/fa) \leq 3$ to 4

(1) Required Parameter Settings

The following parameter settings are required to use anti-resonance control for more than one vibration frequency.

		Anti-Resonance Control Selection Speed Pos Trq		When Enabled
Pn160 (2160h)	n.□□□X	0 Default	Do not use anti-resonance control.	Immediately
		1	Use anti-resonance control.	

Pn161 (2161h)	Anti-Resonance Frequency Speed Pos Trq			
	Setting Range	Setting Unit	Default Setting	When Enabled
	10 to 20000	0.1 Hz	1000	Immediately
Pn162 (2162h)	Anti-Resonance Gain Correction Speed Pos Trq			
	Setting Range	Setting Unit	Default Setting	When Enabled
	1 to 1000	1%	100	Immediately
Pn163 (2163h)	Anti-Resonance Damping Gain Speed Pos Trq			
	Setting Range	Setting Unit	Default Setting	When Enabled
	0 to 300	1%	0	Immediately
Pn164 (2164h)	Anti-Resonance Filter Time Constant 1 Correction Speed Pos Trq			
	Setting Range	Setting Unit	Default Setting	When Enabled
	-1000 to 1000	0.01 ms	0	Immediately
Pn165 (2165h)	Anti-Resonance Filter Time Constant 2 Correction Speed Pos Trq			
	Setting Range	Setting Unit	Default Setting	When Enabled
	-1000 to 1000	0.01 ms	0	Immediately
Pn166 (2166h)	Anti-Resonance Damping Gain 2 Speed Pos Trq			
	Setting Range	Setting Unit	Default Setting	When Enabled
	0 to 1000	1%	0	Immediately

(2) Adjustment Procedure for Suppressing Different Vibration Frequencies with Anti-resonance Control

Use the following procedure to make adjustments to suppress different vibration frequencies with anti-resonance control.

Step	Operation
1	Use the gain adjustment and anti-resonance control. Refer to the following section for details. ☞ *8.10.4 Operating Procedure on page 412*
2	If there is vibration at a higher frequency than the vibration suppressed with anti-resonance control in step 1, adjust Pn166 (Anti-Resonance Damping Gain 2). If there is vibration at a lower frequency than the vibration suppressed with anti-resonance control in step 1, return to step 1, set Pn161 (Anti-Resonance Frequency) to the lower vibration frequency, and adjust Pn163 (Anti-Resonance Damping Gain) again. Then adjust Pn166 (Anti-Resonance Damping Gain 2).
3	Adjust Pn166 (Anti-Resonance Damping Gain 2) while checking to see if vibration reduction is effective. To adjust Pn166 (Anti-Resonance Damping Gain 2), increase the setting by 10% at a time starting from the value that resulted in Pn163 (Anti-Resonance Damping Gain) from the adjustment in step 1.
4	If the vibration disappears, the adjustment is completed. However, if the vibration does not disappear even when you adjust Pn166 (Anti-Resonance Damping Gain 2), reduce the tuning level or feedback level until vibration does not occur.

8.11 Vibration Suppression

This section describes vibration suppression.

8.11.1 Outline

You can use vibration suppression to suppress transient vibration at a low frequency from 1 Hz to 100 Hz, which is generated mainly when the machine vibrates during positioning. This is effective for vibration frequencies for which notch filters and anti-resonance control adjustment are not effective.

This function is automatically set by autotuning without a host reference or autotuning with a host reference. Use this function only if fine-tuning is required or readjustment is required as a result of a failure to detect vibration. To execute this function, input an operation reference and execute the function when there is vibration.

Perform custom tuning if required to increase the response after executing this function.

⚠ CAUTION

Related parameters will be set automatically when this function is executed. This may greatly affect the response before and after execution. Make sure that you can perform an emergency stop at any time.

Before you execute this function, set Pn103 (Moment of Inertia Ratio) correctly. If the setting greatly differs from the actual moment of inertia ratio, normal control of the machine may not be possible, and vibration may result.

Important

- This function detects vibration frequencies between 1 Hz and 100 Hz.
- Frequency detection will not be performed if there is no vibration in the position deviation or if the vibration frequency is outside the range of detectable frequencies. If that is a problem, use a device such as a displacement meter or vibration sensor to measure the vibration frequency.
- If an automatically detected vibration frequency is not suppressed, the actual frequency and the detected frequency may be different. Fine-tune the detected frequency if necessary.

(1) Items That Influence Performance

If continuous vibration occurs while the servomotor is stopping, vibration suppression cannot be used to suppress the vibration effectively. In this case, use anti-resonance control adjustment or custom tuning.

(2) Detection of Vibration Frequencies

Frequency detection may not be possible if vibration does not appear in the position deviation or the vibration that results from the position deviation is too small. You can adjust the detection sensitivity by changing the setting of Pn560 (Residual Vibration Detection Width), which is set as a percentage of the setting of Pn522 (Positioning Completed Width). Perform the detection of vibration frequencies again after adjusting the setting of Pn560.

Pn560 (2560h)	Residual Vibration Detection Width			Speed / **Pos** / Trq
	Setting Range	Setting Unit	Default Setting	When Enabled
	1 to 3000	0.1%	400	Immediately

Note:

As a guideline, change the setting 10% at a time. If the setting of this parameter is lowered, the detection sensitivity will be increased. Vibration may not be detected accurately if the setting is too small.

Information

The vibration frequencies that are automatically detected may vary somewhat with each positioning operation. Perform positioning several times and make adjustments while checking the effect of vibration suppression.

8.11.2 Preparations

Always check the following before you execute vibration suppression.

- Position control must be used.
- Pn170 must be set to n.□□□0 (Tuning-less Selection is disabled).
- Pn00C must be set to n.□□□0 (Function Selection for Test without a Motor is disabled).
- The parameters must not be write prohibited.

8.11.3 Applicable Tools

The following table lists the tools that you can use to perform vibration suppression.

Tool	Fn No./Function Name	Operating Procedure Reference
Digital Operator	Fn205	Σ-7/Σ-X-Series Digital Operator Operating Manual (Manual No.: SIEP S800001 33)
SigmaWin+	[Tuning] - [Tuning]	*8.11.4 Operating Procedure on page 418*

8.11.4 Operating Procedure

Use the following procedure to perform vibration suppression.

1. **Perform steps 1 to 9 of the procedure for custom tuning. Refer to the following section for details.**

   8.9.4 Operating Procedure on page 403

2. **Click the [Vib Suppress] button.**

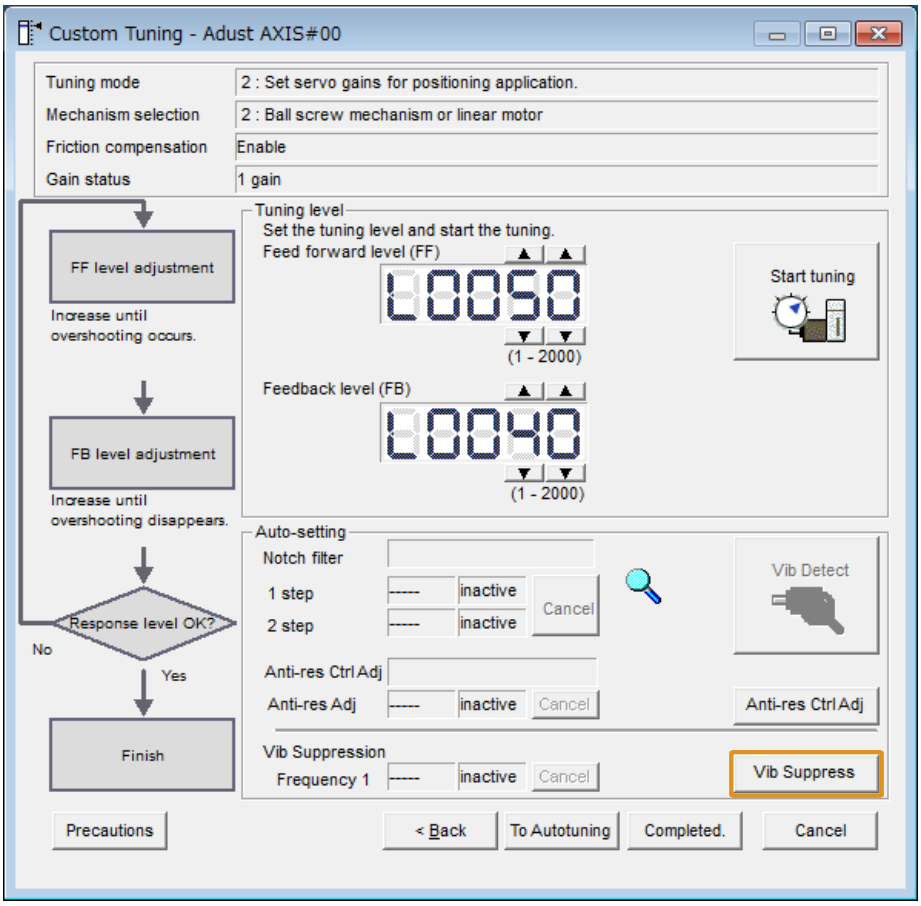

3. **Click the [Import] button or click the [▲] and [▼] buttons to manually adjust the set frequency.**

When you click the [Import] button, the residual vibration frequency in the servomotor is read as the set frequency. (The frequency can be read only when the residual vibration frequency is between 1.0 and 100.0.)

> **Important**
> Frequency detection will not be performed if there is no vibration or if the vibration frequency is outside the range of detectable frequencies. If a vibration frequency is not detected, provide a means of measuring the vibration frequency.

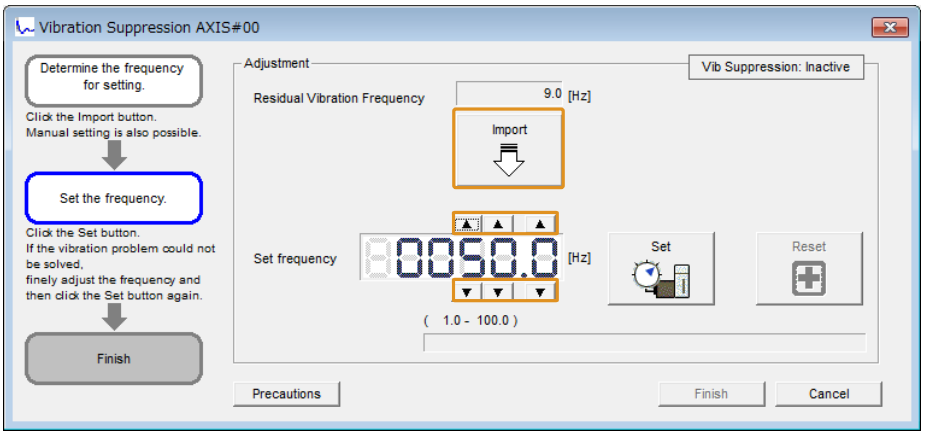

4. **Click the [Set] button.**

> **Important**
> No settings related to vibration suppression are changed during operation.
> If the servomotor does not stop within approximately 10 seconds after changing the setting, an update timeout will occur. The setting will be automatically returned to the previous value.

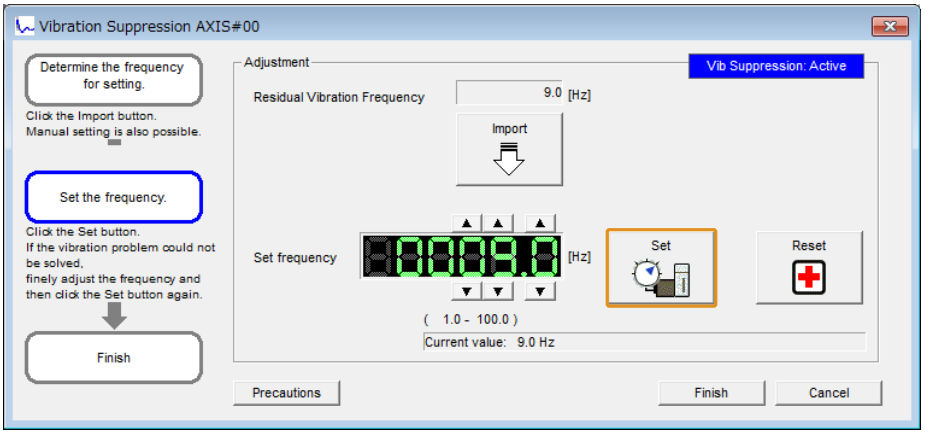

If the vibration is not eliminated, use the [▲] and [▼] buttons for the set frequency to fine-tune the value and click the [Set] button again.

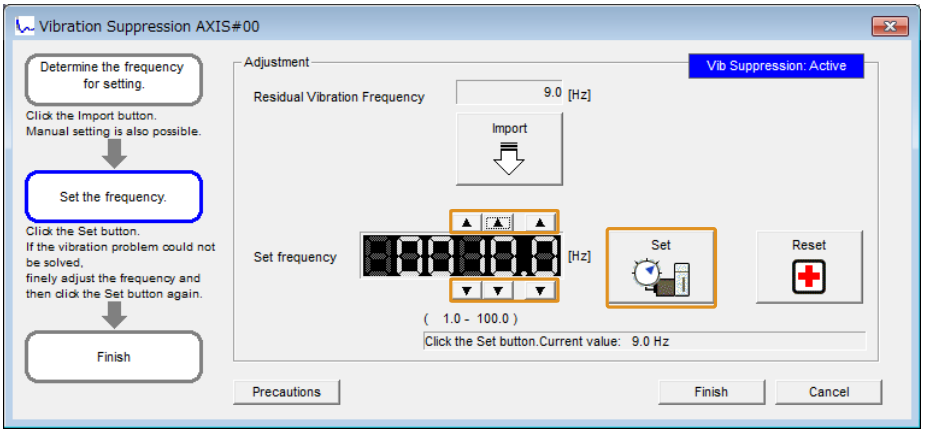

Click the [Reset] button during tuning to restore the setting to its original value. The status from before when adjustment was started will be restored.

5. **When the vibration has been eliminated, click the [Finish] button.**

   The updated value will be saved in the SERVOPACK.

> **Important**
> Vibration suppression will be enabled in step 5. The motor response, however, will change when the servomotor comes to a stop with no reference input.

This concludes the procedure to set up vibration suppression.

8.11.5 Setting Combined Functions

You can also use the feedforward function when you execute vibration suppression.

In the default settings, Pn109 (Feedforward), the speed feedforward input, and the torque feedforward input are disabled.

To use the speed feedforward input, the torque feedforward input, and model following control from the host controller in the system, set Pn140 to n.1□□□ (use model following control and speed/torque feedforward together).

		Speed Feedforward (VFF)/Torque Feedforward (TFF) Selection Speed **Pos** Trq		When Enabled
Pn140 (2140h)	n.X□□□	0 Default	Do not use model following control and speed/torque feedforward together.	Immediately
		1	Use model following control and speed/torque feedforward together.	

> **Important**
> When model following control is used with this function, it is used to make optimum feedforward settings in the SERVOPACK. Therefore, model following control is not normally used together with either the speed feedforward input or torque feedforward input from the host controller. However, model following control can be used with the speed feedforward input or torque feedforward input if required. An unsuitable feedforward input may result in overshooting.

8.11.6 Related Parameters

The following parameters are automatically adjusted or used as reference when you execute vibration suppression.

Do not change the settings while vibration suppression is being executed.

Parameter	Name	Automatic Changes
Pn140 (2140h)	Model Following Control-Related Selections	Yes
Pn141 (2141h)	Model Following Control Gain	Yes
Pn142 (2142h)	Model Following Control Gain Correction	No
Pn143 (2143h)	Model Following Control Bias in the Forward Direction	No
Pn144 (2144h)	Model Following Control Bias in the Reverse Direction	No
Pn145 (2145h)	Vibration Suppression 1 Frequency A	Yes
Pn146 (2146h)	Vibration Suppression 1 Frequency B	Yes
Pn147 (2147h)	Model Following Control Speed Feedforward Compensation	No
Pn14A (214Ah)	Vibration Suppression 2 Frequency	No
Pn14B (214Bh)	Vibration Suppression 2 Correction	No

Yes: The parameter is automatically set.

No: The parameter is not automatically set, but the setting is read during execution.

8.12 Speed Ripple Compensation

This section describes speed ripple compensation.

8.12.1 Outline

Speed ripple compensation reduces the amount of ripple in the motor speed due to torque ripple or cogging torque. You can enable speed ripple compensation to achieve smoother operation. You do not need to perform any setup procedures to enable this function when a Σ-X-series rotary servomotor is connected to the SERVOPACK. If any other servomotor is connected to the SERVOPACK, perform the setup procedure with [Ripple Compensation] in the SigmaWin+.

⚠ WARNING

Speed ripple compensation setup is a tuning function that actually drives the machine and therefore presents hazards. Observe the following precautions.

- **Confirm safety around moving parts.**
- **This function involves automatic operation. Make sure that you can perform an emergency stop (to turn OFF the power supply) at any time.**

Important

Execute this function only after adjusting the gains.

- If the servomotor or SERVOPACK is replaced after this function is set up in the SigmaWin+, set up this function again.
- Execute speed ripple compensation after jogging to a position that ensures a suitable range of motion.

8.12.2 Speed Ripple Compensation when a Rotary Servomotor Is Connected

The following two methods are available to enable speed ripple compensation when a rotary servomotor is connected.

- Using the default adjustment value saved to the servomotor
- Using the user adjustment value set up with the SigmaWin+

(1) Using the Default Adjustment Value

This function enables speed ripple compensation by using the default adjustment value that is saved to the servomotor when shipped from the factory.

When a servomotor that supports the default adjustment value is connected to the SERVOPACK, this function can be enabled without performing any setup procedures with the SigmaWin+.

		Speed Ripple Compensation Function Selection Speed Pos Trq		When Enabled
Pn423 (2423h)	n.□□□X	0	Do not execute speed ripple compensation.	Immediately
		1	Execute speed ripple compensation using the value adjusted by the user.	
		2 Default	Execute speed ripple compensation using the default adjustment value.	

Information

When a servomotor that does not support the default adjustment value is connected to the SERVOPACK, this function will not be enabled even if Pn423 is set to n.□□□2 (execute speed ripple compensation using the default adjustment value).

If the servomotor is replaced when Pn423 is set to n.□□□2 (execute speed ripple compensation using the default adjustment value), the SERVOPACK will execute this function using the default adjustment value of the servomotor that was newly connected. As a result, A.942 (Speed Ripple Compensation Information Disagreement) will not occur.

(a) Restrictions

Only Σ-X-series rotary servomotors support the default adjustment value.

(b) Operating Procedure

Speed ripple compensation is enabled simply by connecting a servomotor that supports the default adjustment value.

This is because the default setting of the SERVOPACK is Pn423 = n.□□□2 (execute speed ripple compensation using the default adjustment value).

(2) Using the User Adjustment Value Set Up with the SigmaWin+

Speed ripple information analyzed in the SigmaWin+ can be saved to the SERVOPACK as the user adjustment value and used for speed ripple compensation.

Set up this function in the SigmaWin+ when you connect a servomotor that does not support the default adjustment value.

Information

The default adjustment value saved to the servomotor and the user adjustment value set up in the SigmaWin+ are saved to separate locations in memory.

This allows you to switch between the default adjustment value and user adjustment value. The previous adjustment value will not disappear.

(a) Restrictions

The following restrictions apply to the setup for speed ripple compensation when a rotary servomotor is connected.

◆ Systems for which Execution Cannot Be Performed

There are no restrictions.

◆ Systems for Which Adjustments Cannot Be Made Accurately

- Systems for which there is not a suitable range of motion
- Equipment that is affected by other axes (e.g., gantry equipment)

◆ Preparations

Always check the following before you set up speed ripple compensation.

- The main circuit power must be ON.
- The servo must be OFF.
- There must be no alarms or warnings.
- There must be no hard wire base block (HWBB).
- The parameters must not be write prohibited.
- There must be no impact from other axes.

(b) Applicable Tools

The following table lists the tools that you can set up speed ripple compensation.

Tool	Fn No./Function Name	Reference
Digital Operator	You cannot set up speed ripple compensation from the Digital Operator.	
SigmaWin+	[Diagnostic] - [Ripple Compensation]	☞ *(c) Operating Procedure on page 422*

(c) Operating Procedure

Use the following procedure to set up speed ripple compensation.

1. **Click the [ ] button for the servo drive in the workspace of the Main Window of the SigmaWin+.**
2. **Select [Ripple Compensation] in the [Menu] dialog box.**

   The [Ripple Compensation] dialog box will be displayed.

3. **Read the warnings and then click the [OK] button.**

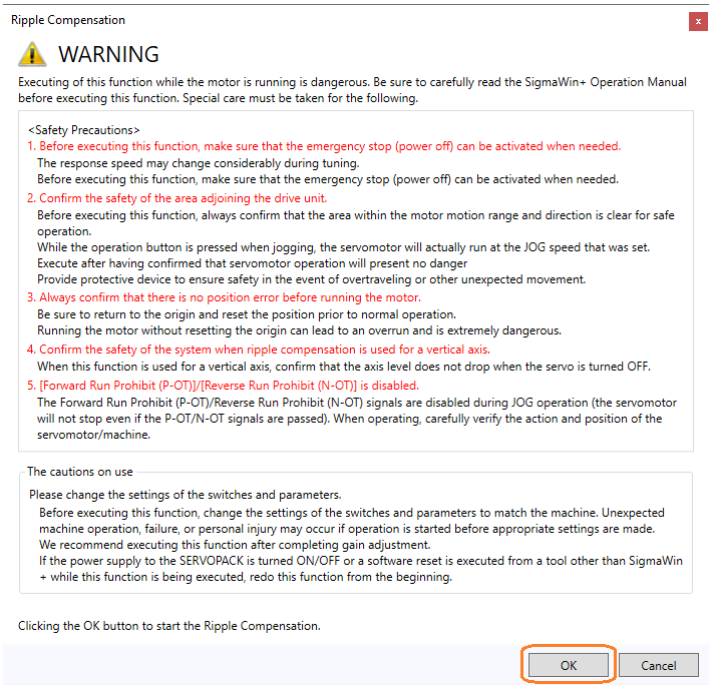

A jogging speed for the speed ripple measurement will be automatically set.

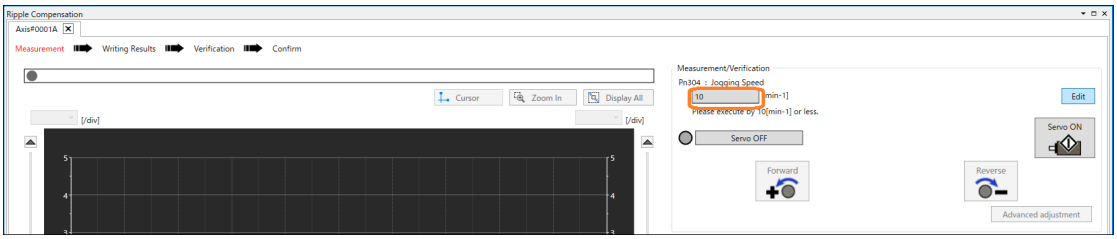

4. **Check the jogging speed. If the jogging speed that was set is OK, proceed to step 6. To change the jogging speed, click the [Edit] button.**

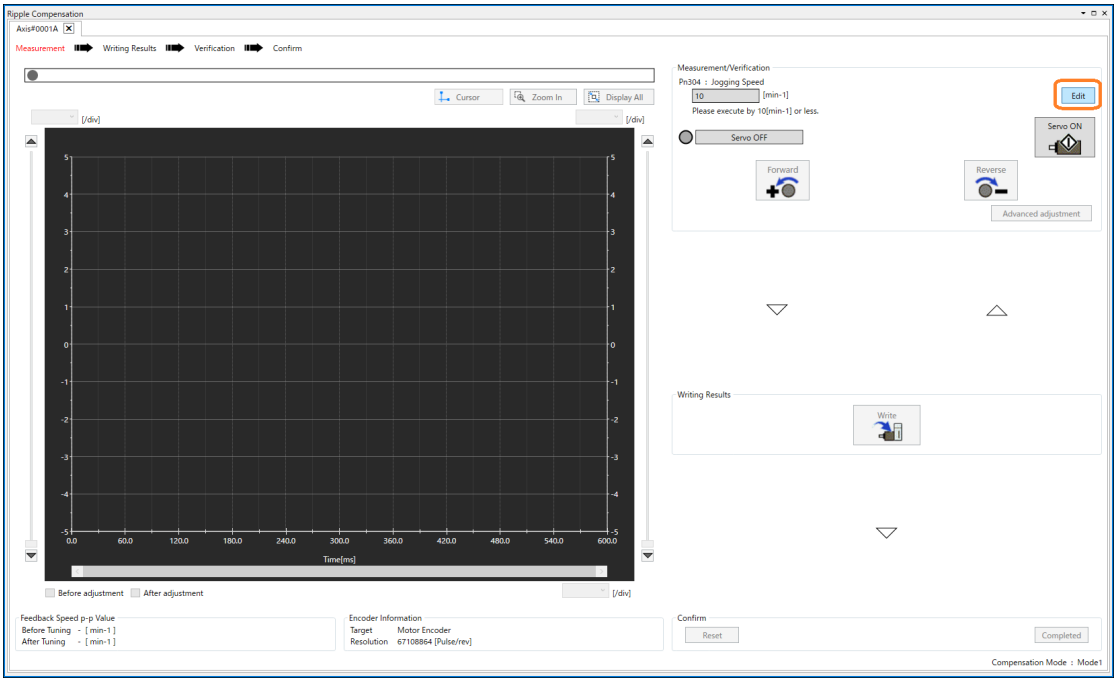

5. **Enter the jogging speed in [Set Value] and click the [OK] button.**

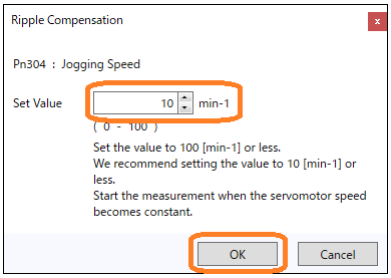

The Main Window will return.

6. **Confirm safety around moving parts and click the [Servo ON] button.**

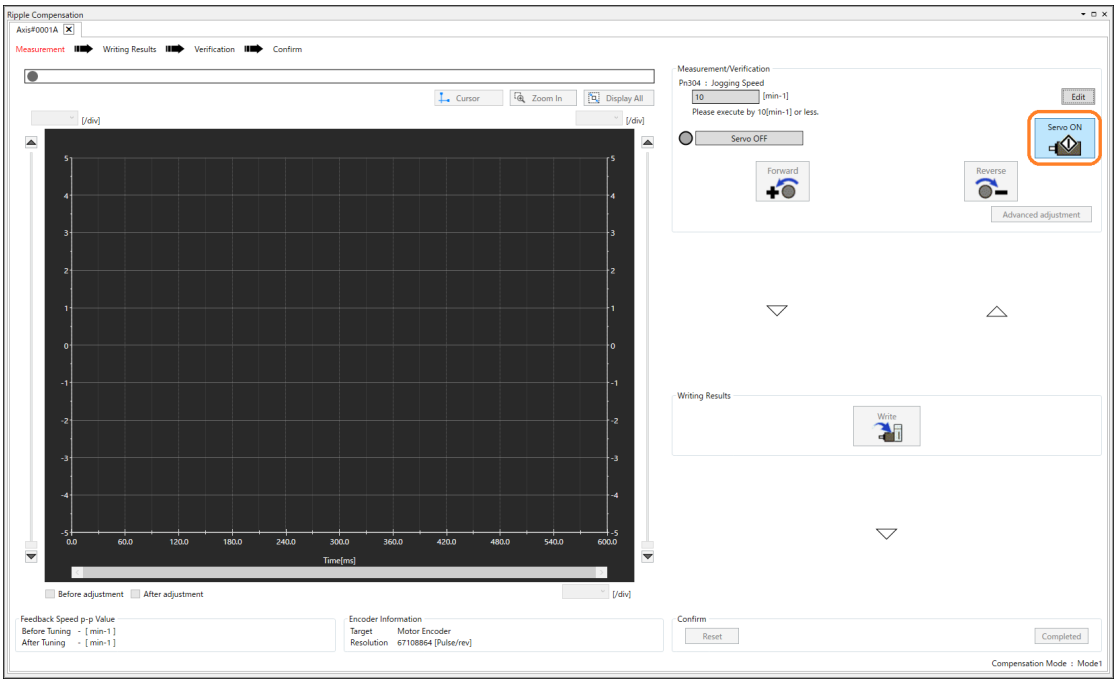

7. **Click and hold the [Forward] button or the [Reverse] button.**

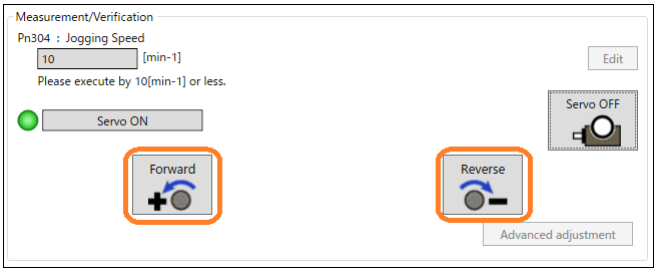

The servomotor shaft will rotate at the preset jogging speed while you hold down the [Forward] or [Reverse] button and the speed ripple will be measured.

After the speed ripple measurement has completed, the feedback speed and torque reference waveform during jogging will be displayed in the graph area.

Information If you stop pressing the [Forward] button or the [Reverse] button before the measurement has completed, the following message dialog box will be displayed.

Click the [OK] button and repeat the measurement.

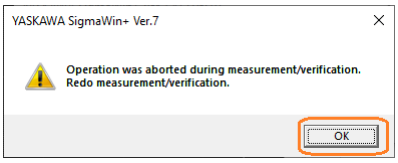

8. **After speed ripple measurement has been completed, click the [Servo OFF] button.**

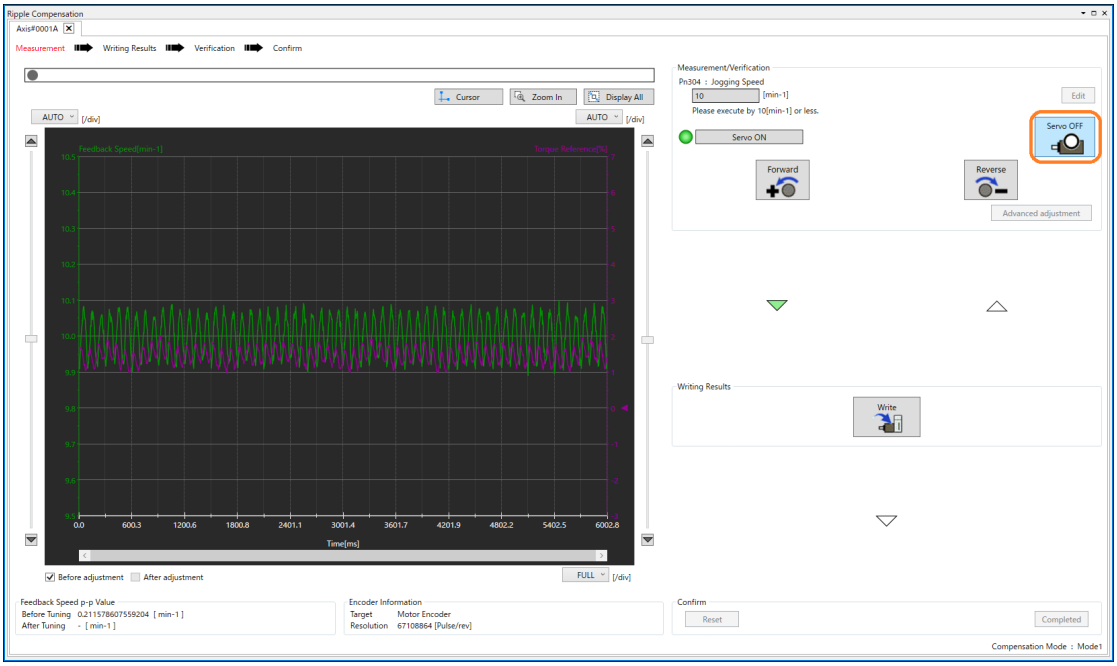

9. **Click the [Write] button.**

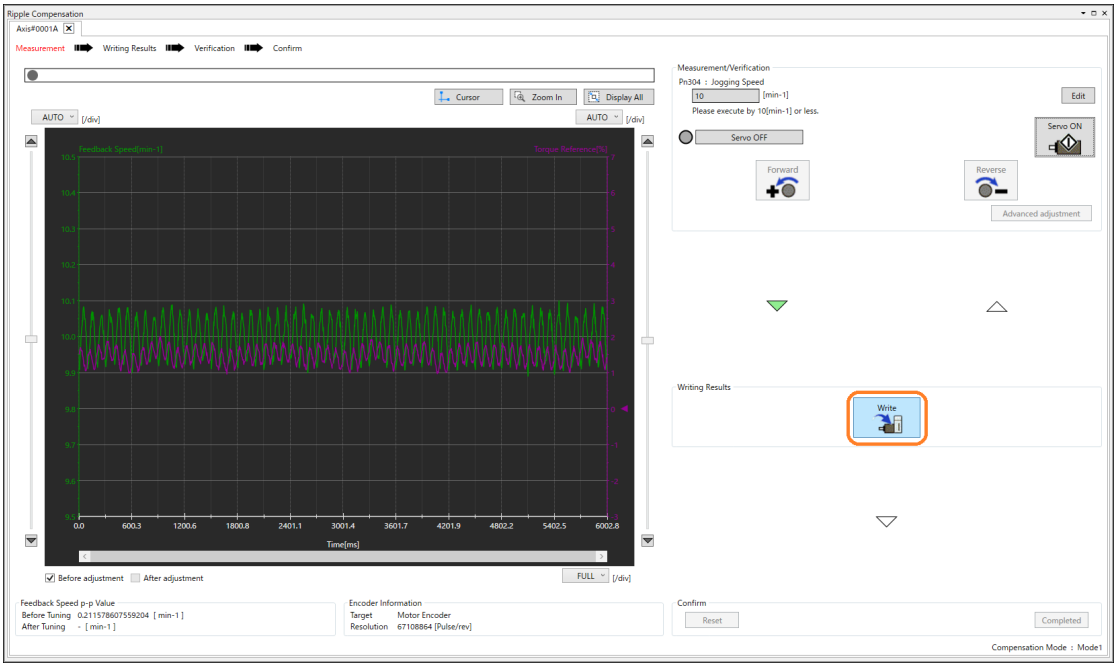

The ripple compensation value will be written to the SERVOPACK.

10. **After writing has been completed, click the [OK] button.**

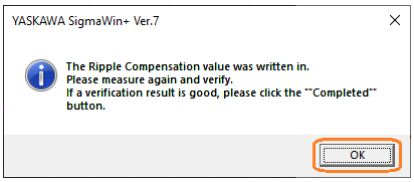

11. **Click the [Servo ON] button.**

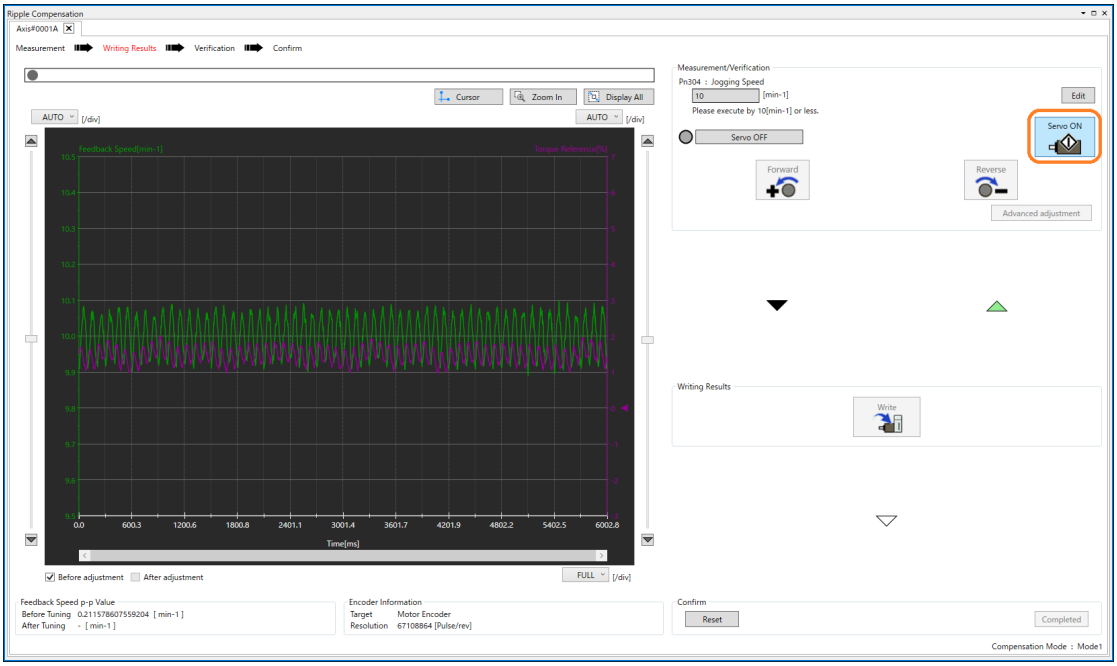

12. **Click and hold the [Forward] button or the [Reverse] button.**

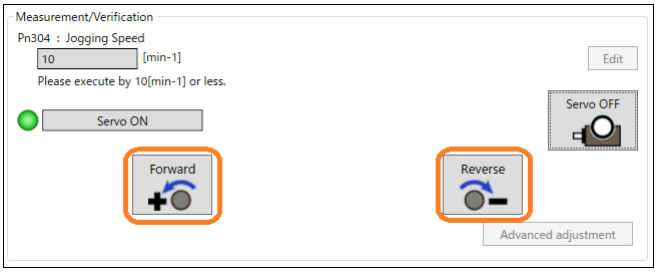

The servomotor shaft will rotate at the preset jogging speed while you hold down the [Forward] or [Reverse] button and the speed ripple will be measured.

The waveform during verification operation with speed ripple compensation applied to it will be displayed overlapping in the graph area.

13. **If you obtained satisfactory results in the verification of speed ripple compensation, first click the [Servo OFF] button, and then click the [Completed] button.**

The tuning results will be set for the parameters and the [Ripple Compensation] window will close.

Information

- To increase the effect of the speed ripple compensation, click the [Advanced adjustment] button. You can change the speed ripple compensation gain.

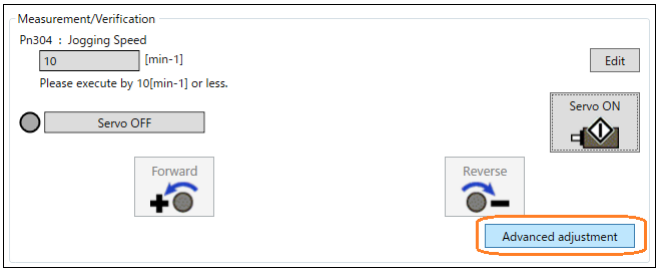

We recommend setting the speed ripple compensation gain to 100% or less because speed ripple may grow larger if the gain setting is too high.

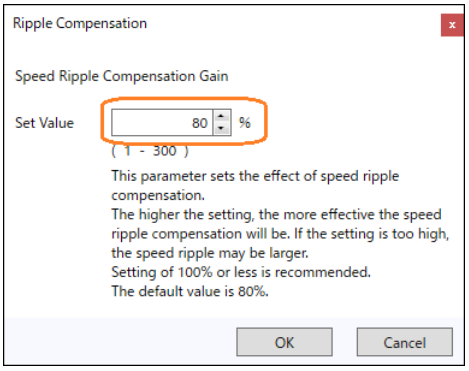

- To discard the setup results and perform setup again, click the [Reset] button and redo the measurement from step 3.

This concludes the setup for speed ripple compensation.

8.12.3 Speed Ripple Compensation when a Linear Servomotor Is Connected

When a linear servomotor is connected to the SERVOPACK, you must complete the setup procedure in the SigmaWin+ to enable speed ripple compensation.

Set the range of motion (start point and end point) with the setup procedure in the SigmaWin+. Speed ripple compensation is enabled in this range of motion.

Important

- This function is enabled in the range of motion set during the setup procedure. Speed ripple may increase outside the range of motion.
- If the speed ripple measurement range exceeds 2.5 m, the compensation effect may diminish. If the effect is insufficient, make the speed ripple measurement range narrower.

The timing at which speed ripple compensation is enabled depends on your encoder.

Type of Encoder		When Speed Ripple Compensation Is Enabled
Absolute linear encoder		After power ON
Incremental linear encoder	One of the following: • Multiple Origin Signal (Ref) outputs in range of motion • No Origin Signal (Ref) outputs in range of motion	After power ON
	Only one Origin Signal (Ref) outputs in range of motion	After power ON and after Origin Signal (Ref) is detected

The speed ripple is compensated based on the speed ripple information in the set range of motion.

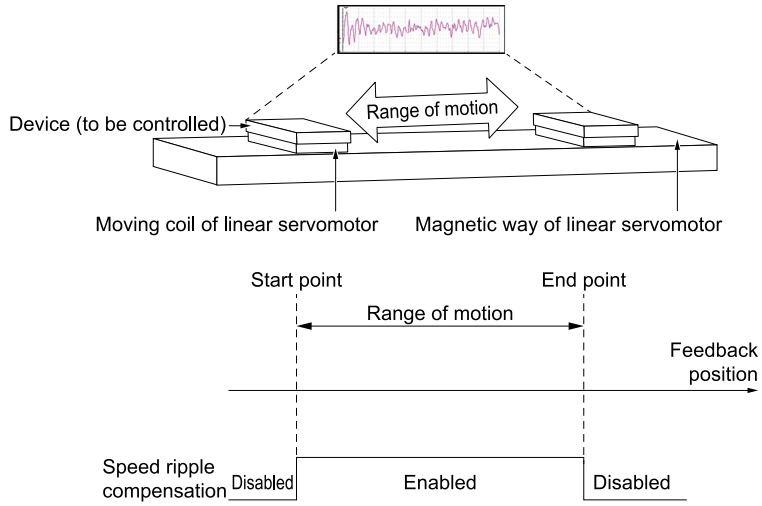

(1) Restrictions

The following restrictions apply to the setup for speed ripple compensation when a linear servomotor is connected.

(a) Systems for Which Adjustments Cannot Be Made Accurately

- Systems for which there is not a suitable range of motion
- Equipment that is affected by other axes (e.g., gantry equipment)

(b) Preparations

Always check the following before you set up speed ripple compensation.

- The main circuit power must be ON.
- The servo must be OFF.
- There must be no alarms or warnings.
- There must be no hard wire base block (HWBB).
- The parameters must not be write prohibited.
- There must be no impact from other axes.

In addition, if you are using an incremental encoder that has one output position for the Origin Signal (Ref), check the following items.

- Speed ripple compensation must not be executed between when the power is turned ON and when the Origin Signal (Ref) is detected.
  When the power is turned ON, execute the origin return operation and confirm that the Speed Ripple Compensation in Progress monitor is ON before starting normal operation.

(2) Applicable Tools

The following table lists the tools that you can set up speed ripple compensation.

Tool	Fn No./Function Name	Reference
Digital Operator	You cannot set up speed ripple compensation from the Digital Operator.	
SigmaWin+	[Diagnostic] - [Ripple Compensation]	☞ *(3) Operating Procedure on page 428*

(3) Operating Procedure

Use the following procedure to set up speed ripple compensation when a linear servomotor is connected.

1. Set the range of motion and check operation.
2. Perform measurement operation.
3. Perform verification operation.

(a) Setting the Range of Motion/Checking Operation

Use the following procedure to set the range of motion and check operation.

1. **Click the [ ] button for the servo drive in the workspace of the Main Window of the SigmaWin+.**
2. **Select [Ripple Compensation] in the [Menu] dialog box.**

   The [Ripple Compensation] dialog box will be displayed.
3. **Read the warnings and then click the [OK] button.**

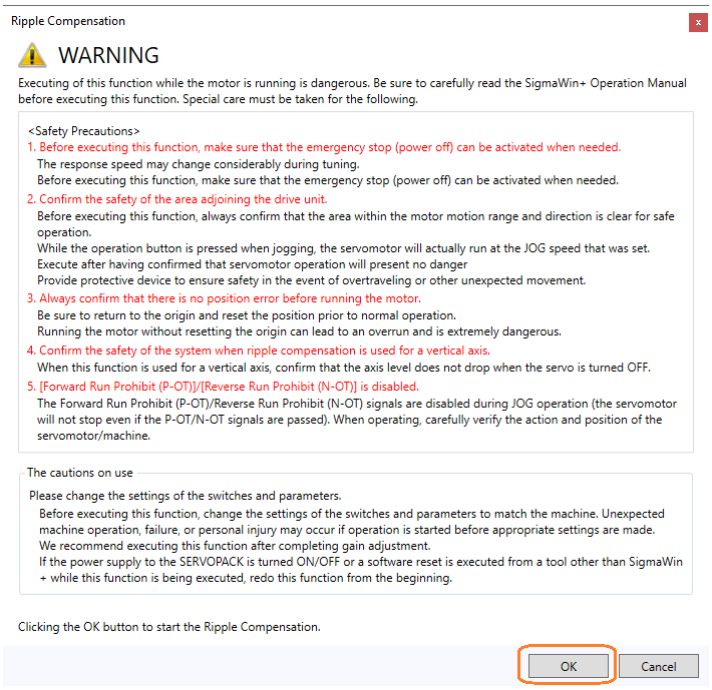

4. **Click one of the following buttons according to the reference method to use when setting the range of motion.**
   - To set the range of motion with a reference from the host controller: Click the [With Host Reference] button.
   - To set the range of motion by jogging: Click the [Without Host Reference] button.

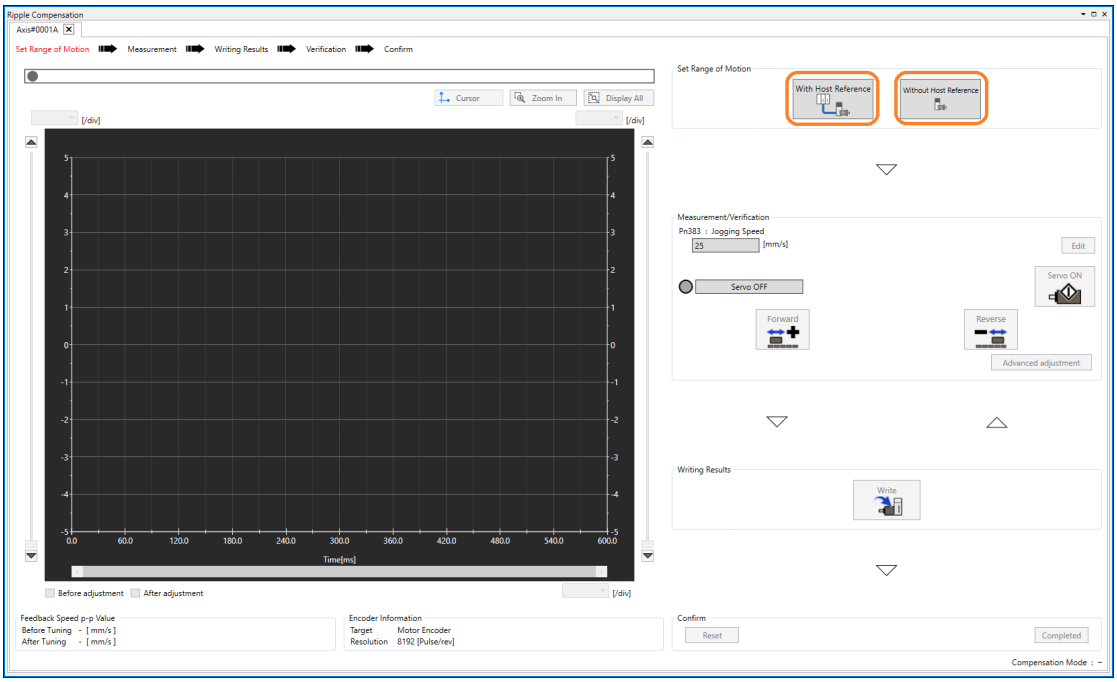

The [Set Range of Motion] window will be displayed.

5. **Confirm safety around moving parts and turn ON the servo with one of the following methods according to the reference method.**
   - If [With Host Reference] was selected in step 4: Turn ON the servo from the host controller.
   - If [Without Host Reference] was selected in step 4: Click the [Servo ON] button.

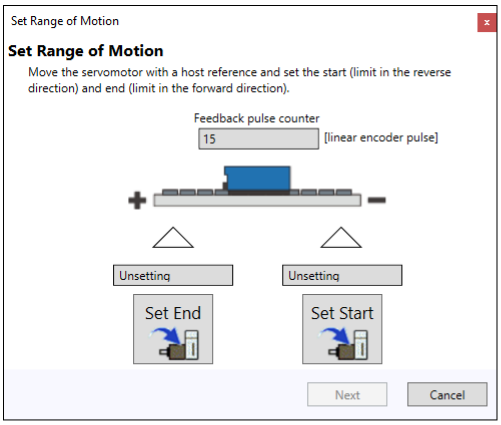

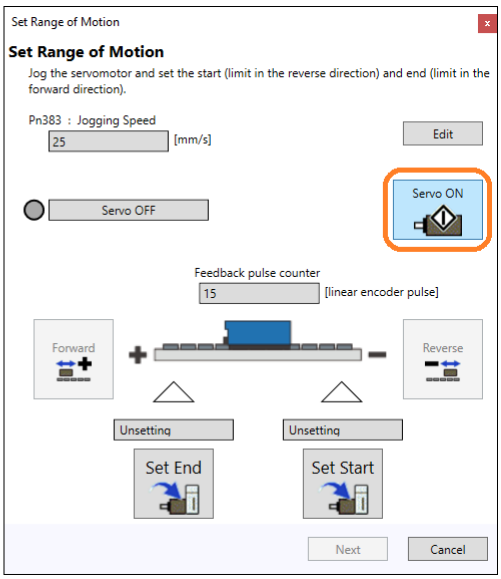

6. **Move the linear servomotor in the forward direction with one of the following methods according to the reference method. Click the [Set End] button when the linear servomotor has moved to the position to set as the end of the range of motion in the forward direction.**
   - If [With Host Reference] was selected in step 4: Move the linear servomotor from the host controller.
   - If [Without Host Reference] was selected in step 4: Click and hold the [Forward] button.

> **Important**
> - Speed ripple may worsen outside the range of motion set during setup.
> - If you are using an incremental encoder that has one output position for the Origin Signal (Ref), set the range of motion so that it includes that output position.
> - Speed ripple may worse if you are using an incremental encoder that has multiple output positions for the Origin Signal (Ref) and the set range of motion includes only one of those output positions. Set the range of motion so that it includes multiple output positions for the Origin Signal (Ref).
> - Set the end point at a sufficient distance from the limit switch to prevent overtravel for occurring.

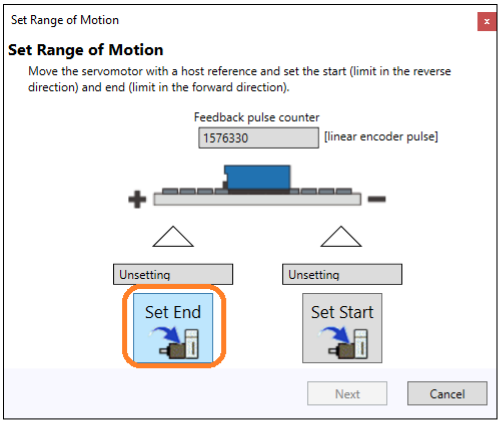

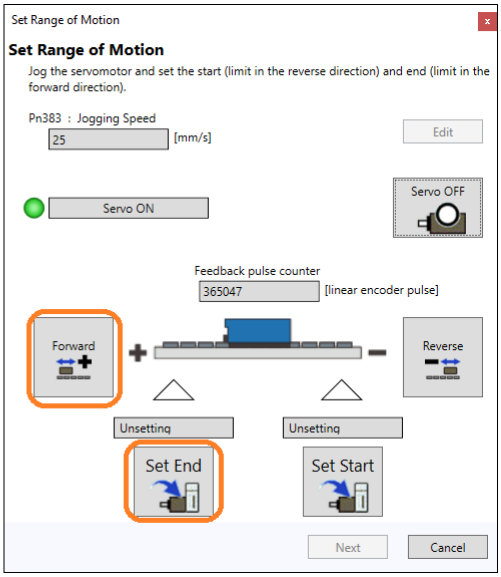

7. **Move the linear servomotor in the reverse direction with one of the following methods according to the reference method. Click the [Set Start] button when the linear**

servomotor has moved to the position to set as the end of the range of motion in the reverse direction.

- If [With Host Reference] was selected in step 4: Move the linear servomotor from the host controller.
- If [Without Host Reference] was selected in step 4: Click and hold the [Reverse] button.

> **Important**
> - Speed ripple may worsen outside the range of motion set during setup.
> - If you are using an incremental encoder that has one output position for the Origin Signal (Ref), set the range of motion so that it includes that output position.
> - Speed ripple may worse if you are using an incremental encoder that has multiple output positions for the Origin Signal (Ref) and the set range of motion includes only one of those output positions. Set the range of motion so that it includes multiple output positions for the Origin Signal (Ref).
> - Set the end point at a sufficient distance from the limit switch to prevent overtravel for occurring.

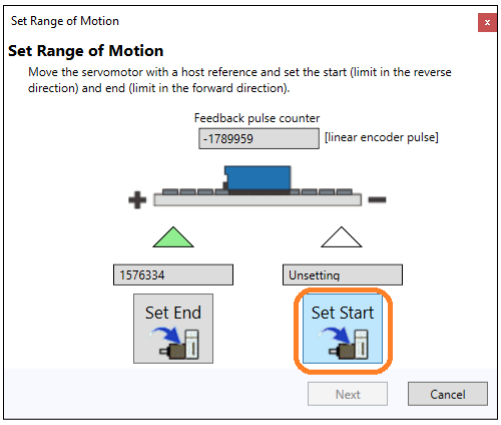

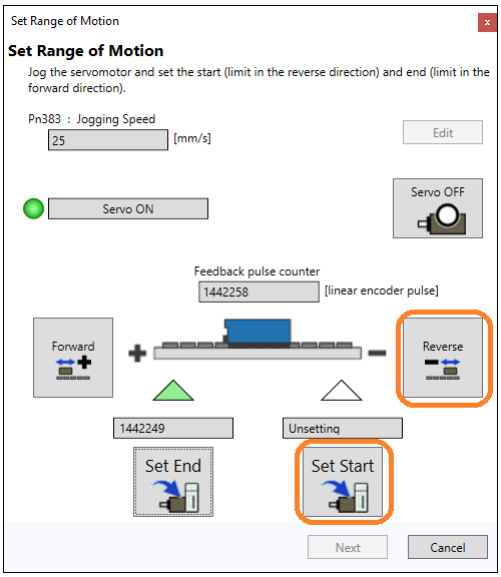

8. **Turn OFF the servo with one of the following methods according to the reference method.**

- If [With Host Reference] was selected in step 4: Turn OFF the servo from the host controller.
- If [Without Host Reference] was selected in step 4: Click the [Servo OFF] button.

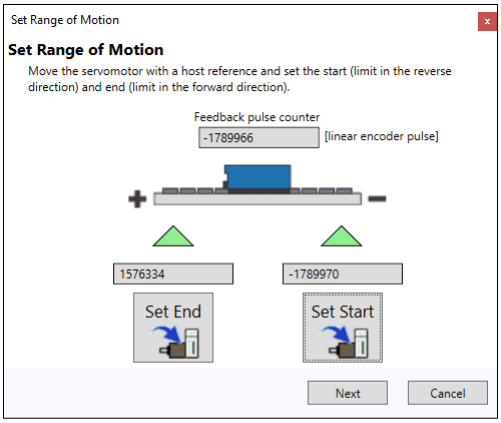

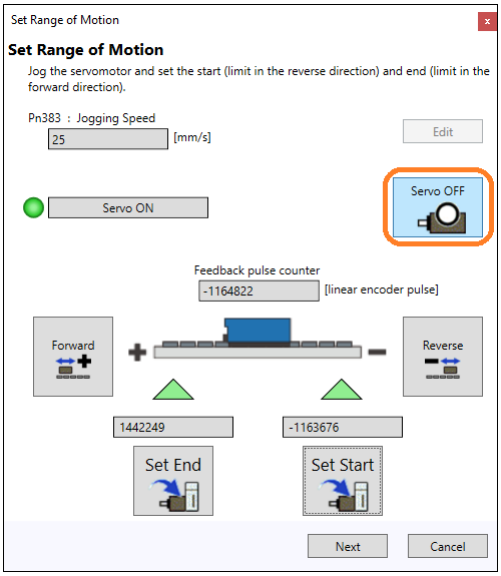

9. **Click the [Next] button.**

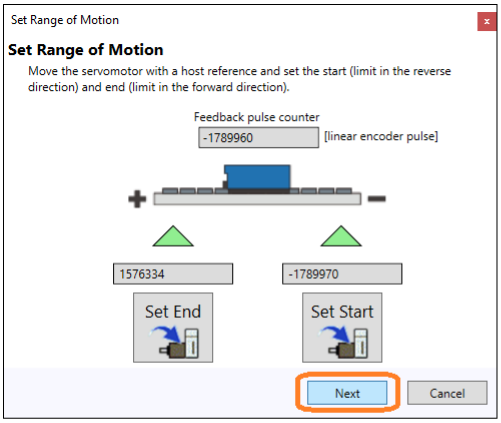

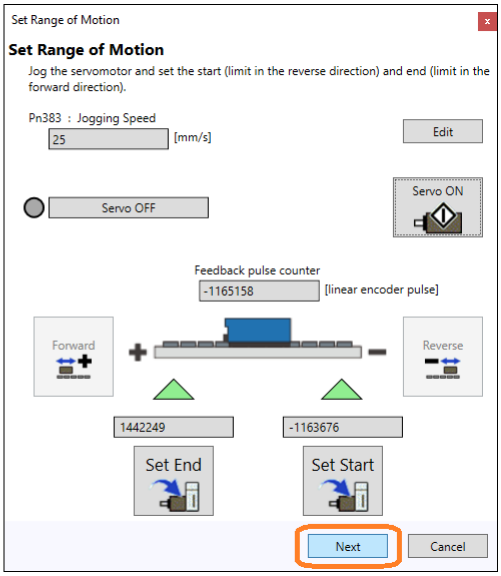

10. **Perform trial operation to check for problems in the range of motion that was set. Confirm safety around moving parts and click the [Servo ON] button.**

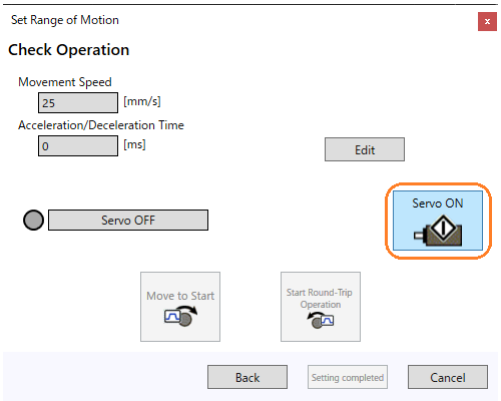

11. **Click the [Move to Start] button.**

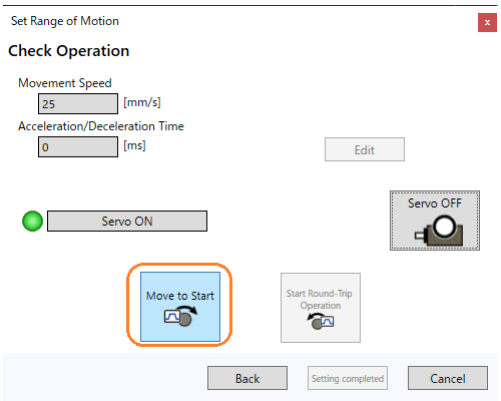

The message dialog box will be displayed.

12. **Confirm the contents of the message and click the [OK] button.**

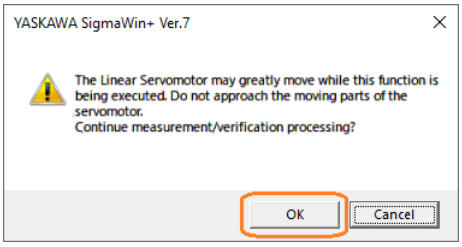

The linear servomotor will move to the start point that was set.

13. **Click the [Start Round-Trip Operation] button.**

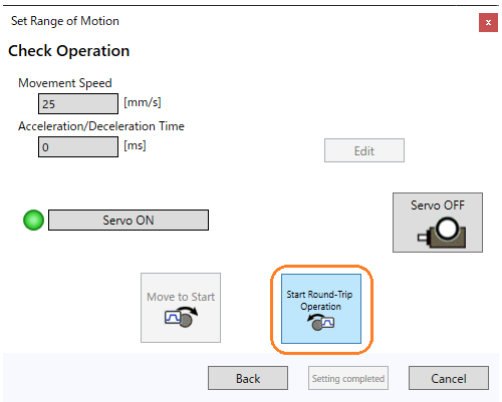

The message dialog box will be displayed.

14. **Confirm the contents of the message and click the [OK] button.**

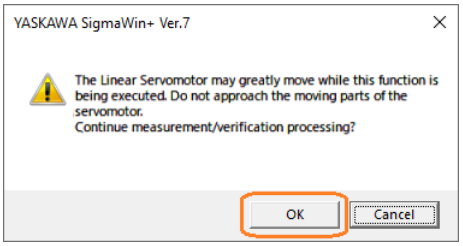

The linear servomotor will perform round-trip operation in the range of motion that was set.

15. **Click the [Servo OFF] button.**

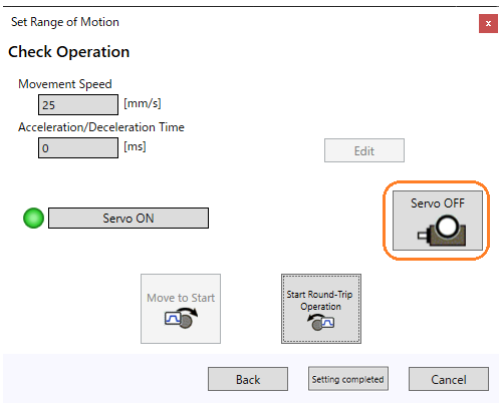

16. **Click the [Setting completed] button.**

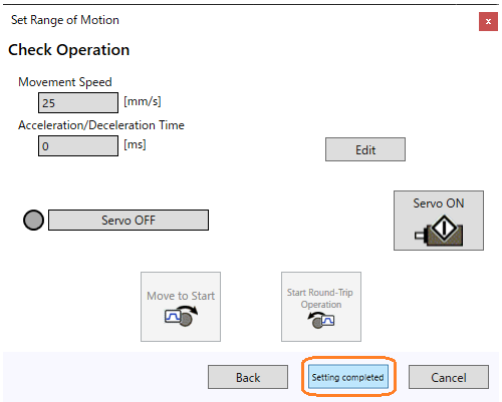

The [Ripple Compensation] window will return.

Information

Click the [Setting completed] button and the following message dialog box may be displayed.

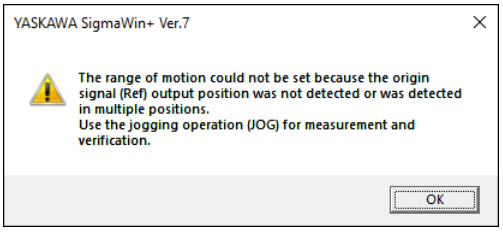

This dialog box will be displayed in the following cases.

- Output of the Origin Signal (Ref) cannot be confirmed when using an increment encoder
- Multiple output positions of Origin Signal (Ref) were confirmed

When this dialog box is displayed, you must measure and verify the range of motion by jogging the servomotor. The operating procedure is the same as starting from step 4 in the operating procedure for speed ripple compensation when a rotary servomotor is connected. Refer to the following section and complete the procedure.

☞ *(c) Operating Procedure on page 422*

This concludes the procedure to set the range of motion and check operation.

(b) Measurement Operation

Use the following procedure to perform measurement operation.

1. **Check the values for travel speed and acceleration/deceleration time. If you will not change the values, proceed to step 3. To change the travel speed and acceleration/deceleration time, click the [Edit] button.**

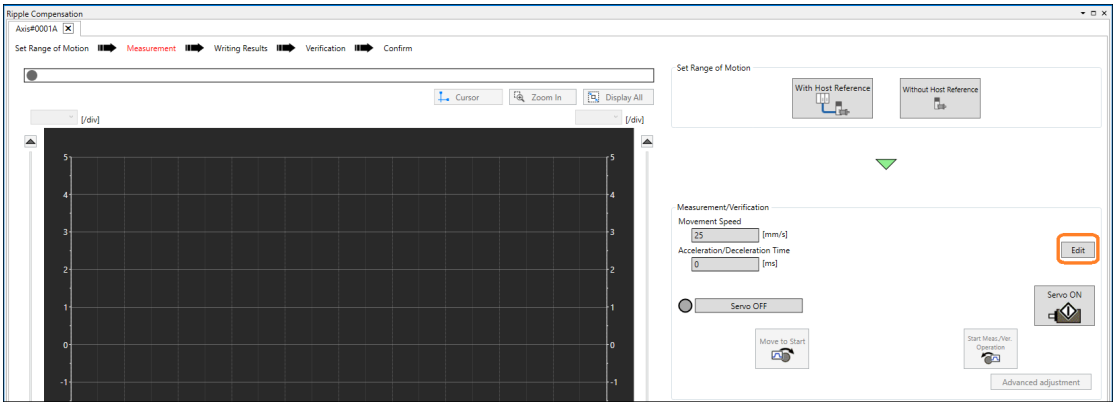

2. **Enter the operating conditions in [Movement Speed (A)] and [Acceleration/Deceleration Time (B)], and then click the [OK] button.**

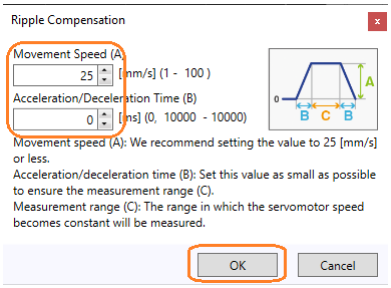

The Main Window will return.

3. **Confirm safety around moving parts and click the [Servo ON] button.**

4. **Click the [Move to Start] button.**

The message dialog box will be displayed.

5. **Confirm the contents of the message and click the [OK] button.**

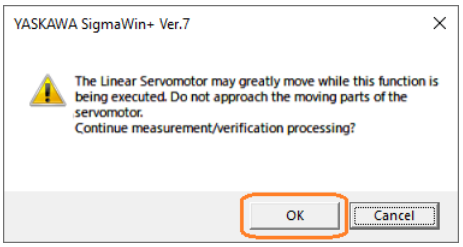

The linear servomotor will move to the start point that was set.

6. **Click the [Start Meas./Ver. Operation] button.**

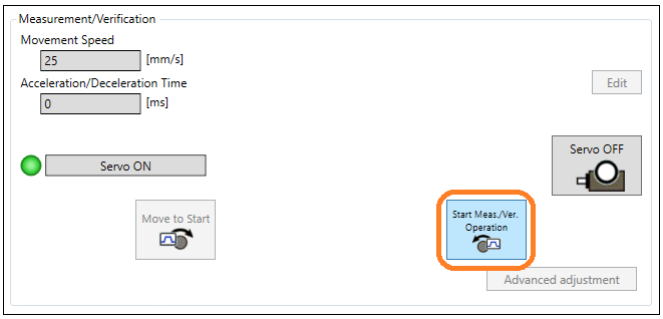

The message dialog box will be displayed.

7. **Confirm the contents of the message and click the [OK] button.**

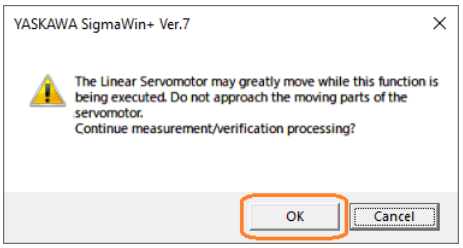

The linear servomotor will move to the end point that was set and speed ripple will be measured.

After the speed ripple measurement has completed, the feedback speed and torque reference waveform during measurement operation will be displayed in the graph area.

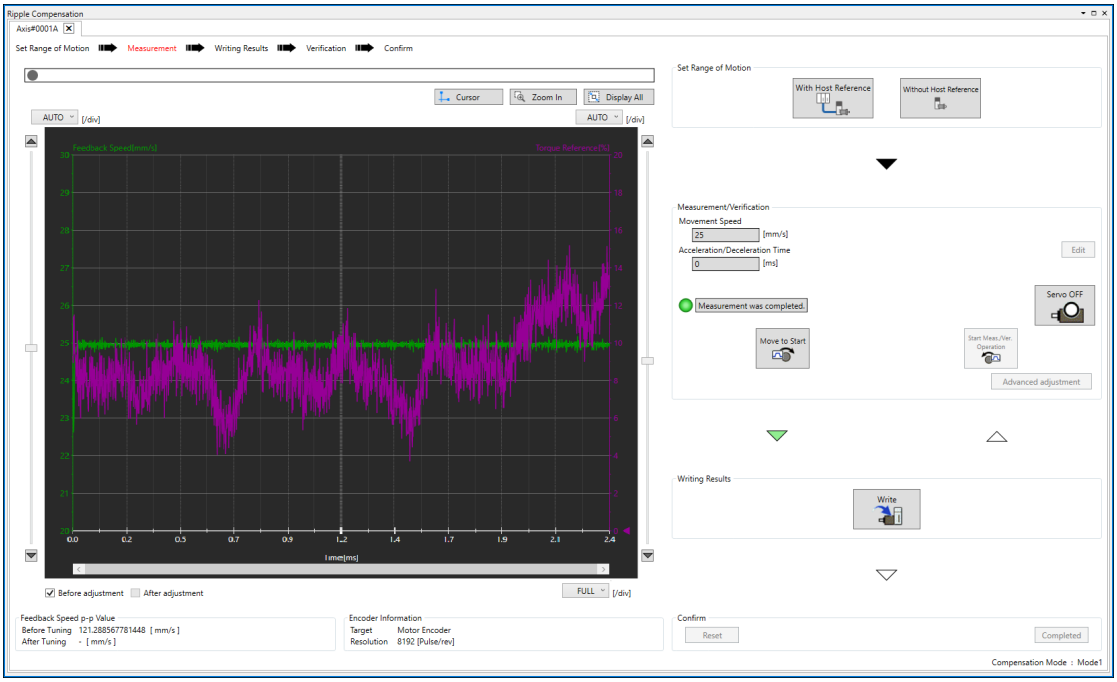

8. **After speed ripple measurement has been completed, click the [Servo OFF] button.**

9. **Click the [Write] button.**

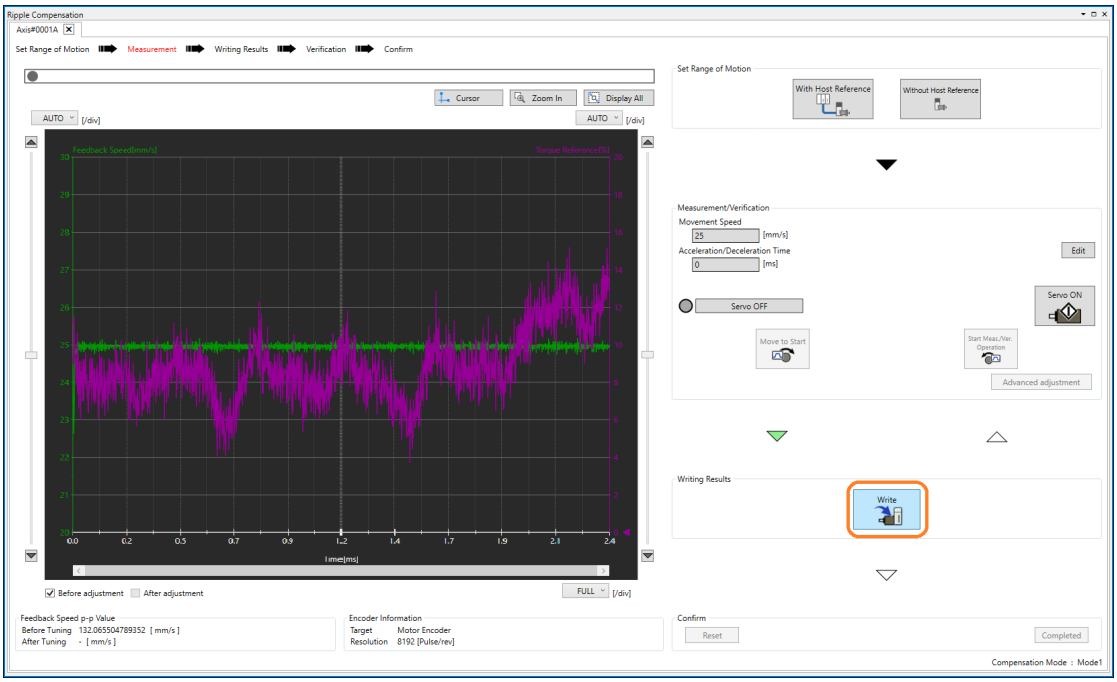

The ripple compensation value will be written to the SERVOPACK.

10. **Click the [OK] button.**

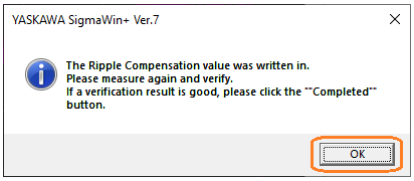

This concludes the measurement operation procedure.

(c) Verification Operation

Use the following procedure to perform verification operation.

1. **Click the [Servo ON] button.**

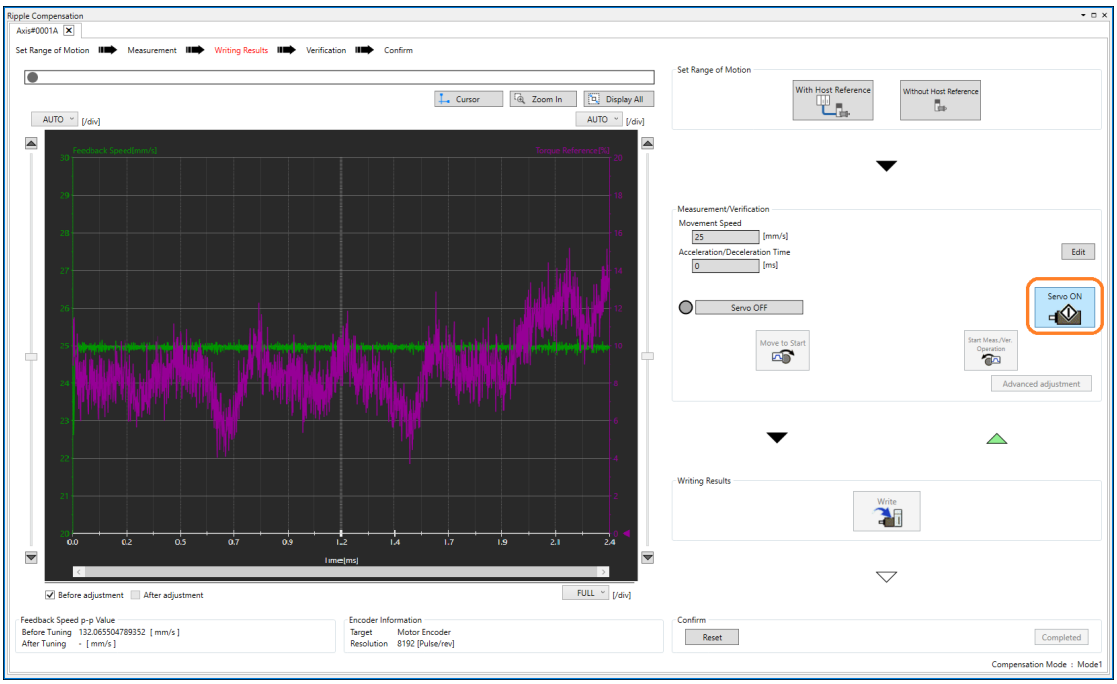

2. **Click the [Move to Start] button.**

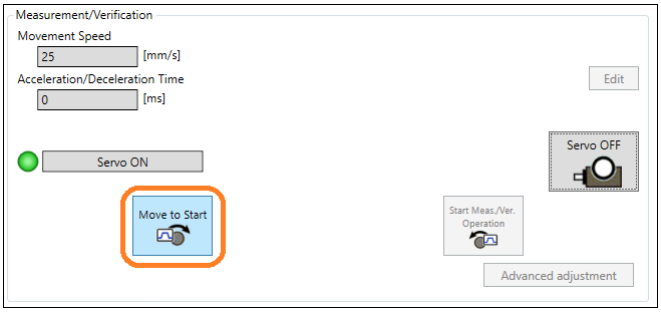

The message dialog box will be displayed.

3. **Confirm the contents of the message and click the [OK] button.**

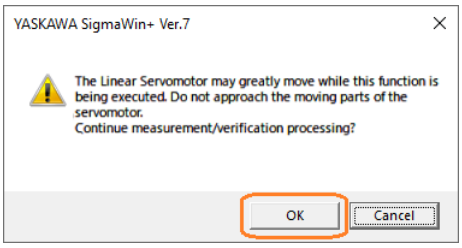

The linear servomotor will move to the start point that was set.

4. **Click the [Start Meas./Ver. Operation] button.**

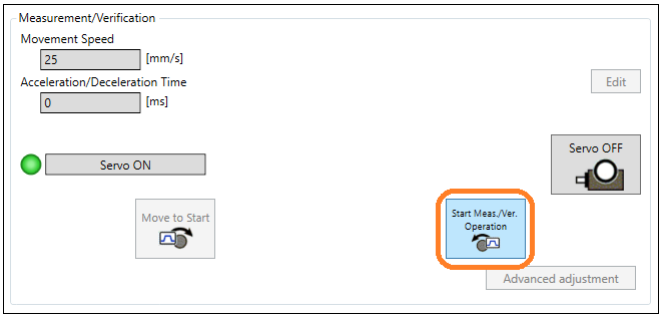

The message dialog box will be displayed.

5. **Confirm the contents of the message and click the [OK] button.**

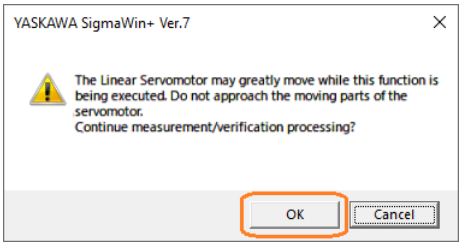

The linear servomotor will move to the end point that was set.

The waveform during verification operation with speed ripple compensation applied to it will be displayed overlapping in the graph area.

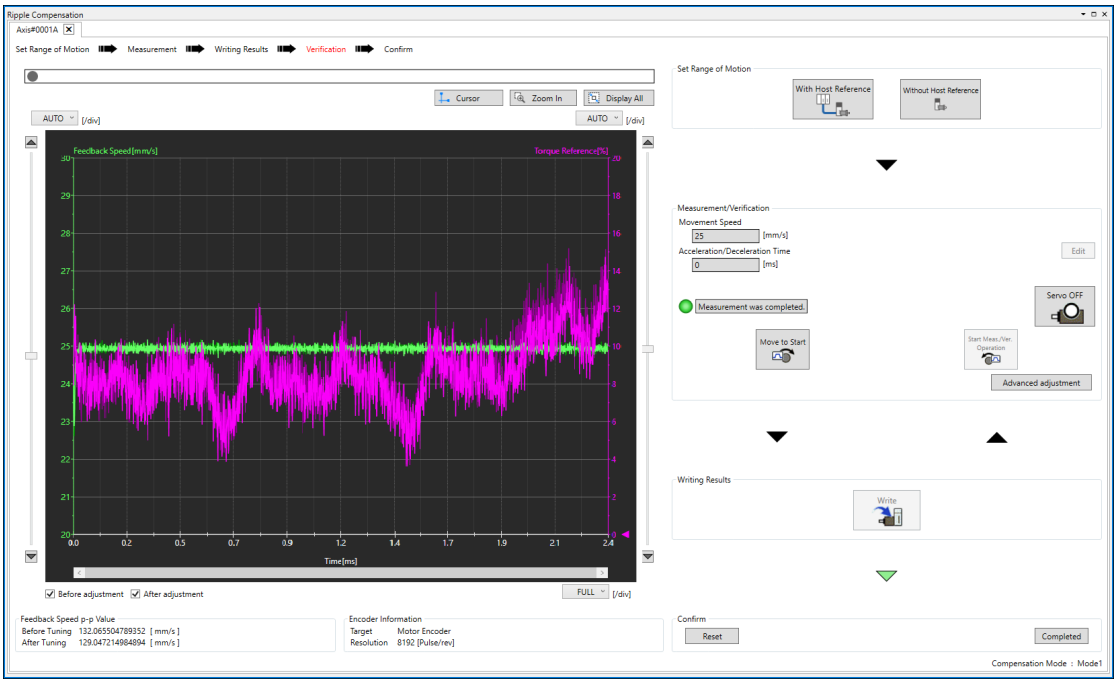

6. **If you obtained satisfactory results in the verification of speed ripple compensation, first click the [Servo OFF] button, and then click the [Completed] button.**

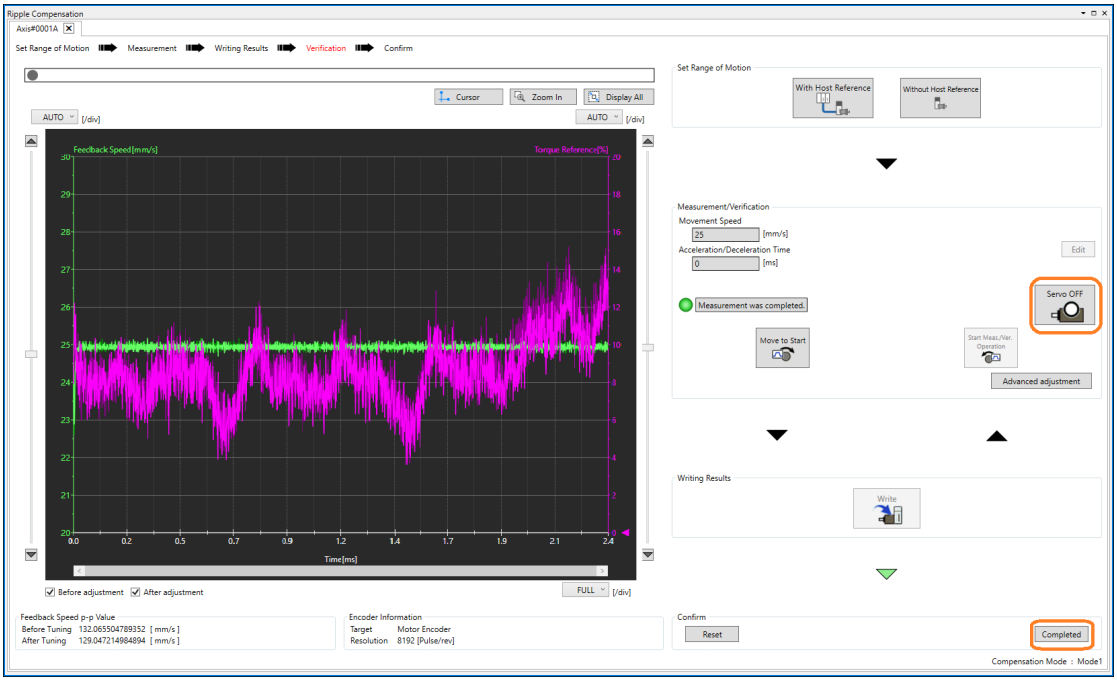

Information

- To increase the effect of the speed ripple compensation, click the [Advanced adjustment] button. You can change the speed ripple compensation gain.

We recommend setting the speed ripple compensation gain to 100% or less because speed ripple may grow larger if the gain setting is too high.

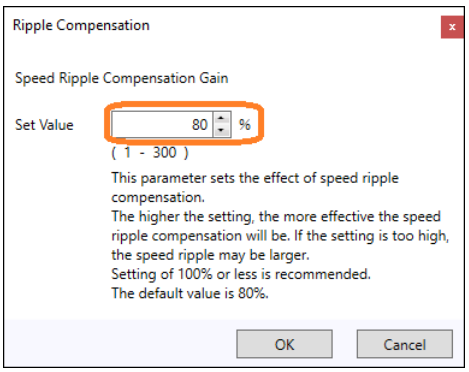

- If there was a problem, click the [Reset] button and redo the settings from "*(a) Setting the Range of Motion/Checking Operation on page 429*".

This concludes the setup for speed ripple compensation.

8.12.4 Speed Ripple Compensation during Torque Control Mode and during Torque Limits

Speed ripple compensation during torque control mode and speed ripple compensation during torque limits are disabled by default.

To enable speed ripple compensation during torque control mode and speed ripple compensation during torque limits, use the following procedure to enable press operation mode.

Information

During press operation mode, the torque reference monitor and trace waveform may change depending on the speed ripple compensation value, even if a constant torque reference is input.

Even when press operation mode is set, speed ripple will not be compensated in such a way as to exceed the maximum torque that can be output by the servomotor and SERVOPACK.

		Speed Ripple Compensation Function Operation Mode Selection Speed Pos Trq		When Enabled
Pn423 (2423h)	n.X□□□	0 Default	Execute speed ripple compensation in normal mode.	After restart
		1	Execute speed ripple compensation in press operation mode.	
		2	Reserved (Do not use.)	
		3	Reserved (Do not use.)	

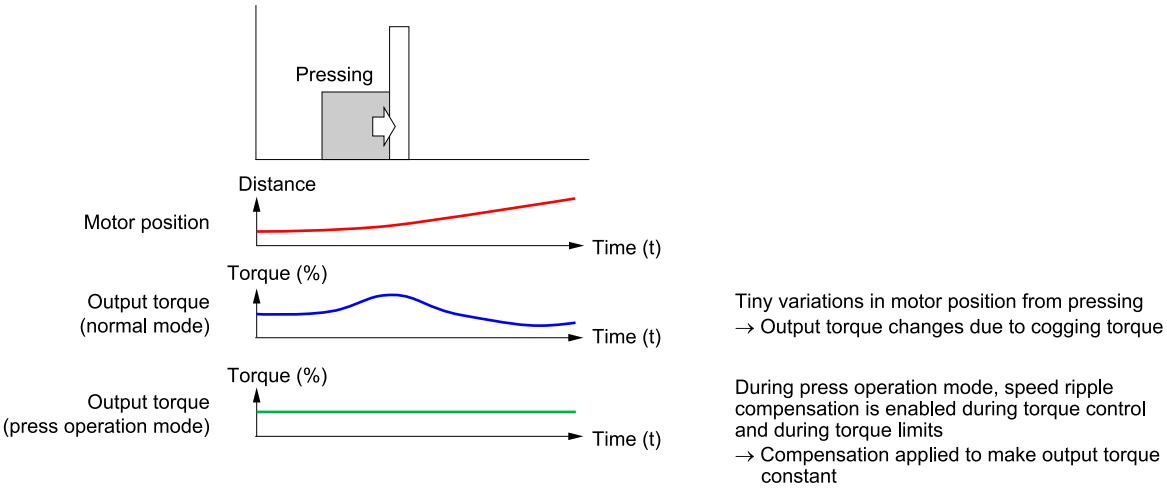

(1) Operating Procedure

Use the following procedure to execute speed ripple compensation in press operation mode.

1. **Perform setup for speed ripple compensation.**

   Refer to the following sections for details.

   ☞ *(c) Operating Procedure on page 422*

   ☞ *(3) Operating Procedure on page 428*

2. **Set Pn423 to n.1□□□ (execute speed ripple compensation in press operation mode).**

3. **Turn the power to the SERVOPACK OFF and ON again.**

   Press operation mode will be enabled.

This concludes the procedure to execute speed ripple compensation in press operation mode.

8.12.5 Parameter Settings

The default setting for speed ripple compensation is Pn423 = n.□□□2 (execute speed ripple compensation using the default adjustment value). If you set up the function using the SigmaWin+, Pn423 will be set to n.□□□1 (execute speed ripple compensation using the user adjustment value). To disable speed ripple compensation, set Pn423 to n.□□□0 (disable speed ripple compensation) to disable the function.

Note:

If Easy FFT is enabled, speed ripple compensation will be forcibly disabled.

		Speed Ripple Compensation Function Selection Speed Pos Trq		When Enabled
Pn423 (2423h)	n.□□□X	0	Do not execute speed ripple compensation.	Immediately
		1	Execute speed ripple compensation using the value adjusted by the user.	
		2 Default	Execute speed ripple compensation using the default adjustment value.	

If you enable speed ripple compensation, a compensation reference will be applied to reduce ripple even when stopped at a 0 speed reference. In speed control mode, this may result in the servomotor moving slightly. To prevent this, set Pn423 to n.□X□□ (Speed Ripple Compensation Enable Condition Selection) and Pn427 or Pn49F (Speed Ripple Compensation Enable Speed).

		Speed Ripple Compensation Enable Condition Selection Speed Pos Trq		When Enabled
Pn423 (2423h)	n.□X□□	0 Default	Speed Reference	After restart
		1	Motor Speed	

- Rotary Servomotors

	Speed Ripple Compensation Enable Speed Speed Pos Trq			
Pn427 (2427h)	Setting Range	Setting Unit	Default Setting	When Enabled
	0 to 10000	1 min^{-1}	0	Immediately

- Linear Servomotors

	Speed Ripple Compensation Enable Speed (Linear) Speed Pos Trq			
Pn49F (249Fh)	Setting Range	Setting Unit	Default Setting	When Enabled
	0 to 10000	1 mm/s	0	Immediately

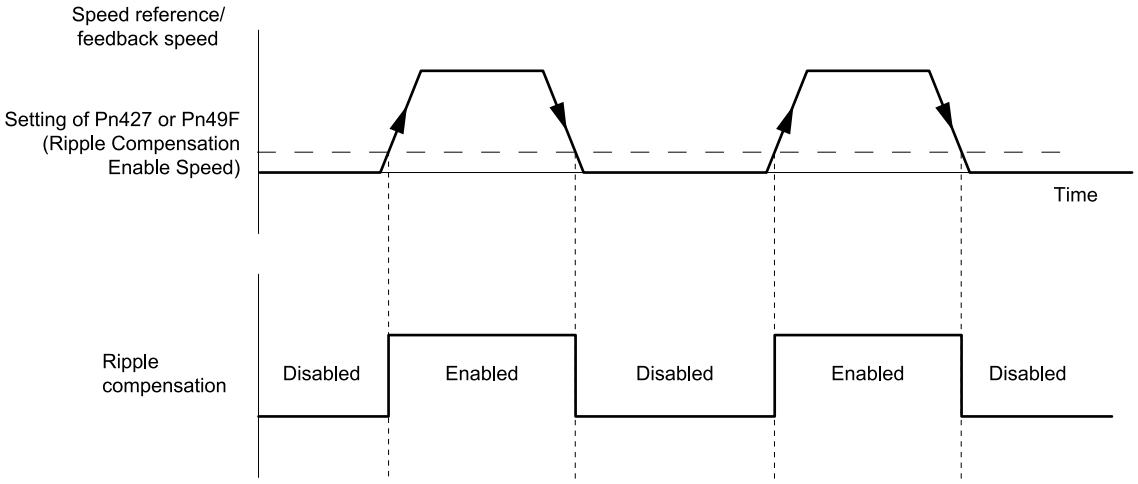

(1) Speed Ripple Compensation Warnings

The speed ripple compensation value is specific to each servomotor. If you replace the servomotor while speed ripple compensation using the user adjustment value is enabled, A.942 (Speed Ripple Compensation Information Disagreement) will occur to warn you.

You can use any of the following methods to clear A.942.

- Reset the speed ripple compensation value on the SigmaWin+.
- Set Pn423 to n.□□□0 (disable speed ripple compensation).
- Set Pn423 to n.□□□2 (execute speed ripple compensation using the default adjustment value).
- Set Pn423 to n.□□1□ (disable detection of A.942).

Information **Information on A.942 When a Linear Servomotor Is Replaced**

A.942 may not occur when a linear servomotor or a linear encoder is replaced. When these devices are replaced, be sure to set up this function again in the SigmaWin+.

Pn423 (2423h)	n.□□□X	Speed Ripple Compensation Function Selection Speed Pos Trq		When Enabled
		0	Do not execute speed ripple compensation.	Immediately
		1	Execute speed ripple compensation using the value adjusted by the user.	
		2 Default	Execute speed ripple compensation using the default adjustment value.	
Pn423 (2423h)	n.□□X□	Speed Ripple Compensation Information Disagreement Warning Detection Selection Speed Pos Trq		When Enabled
		0 Default	Detect A.942 alarms.	After restart
		1	Do not detect A.942 alarms.	

(2) Press Operation Mode for Speed Ripple Compensation

To enable speed ripple compensation during torque control mode and during torque limits, set Pn423 to n.1□□□.

Pn423 (2423h)	n.X□□□	Speed Ripple Compensation Function Operation Mode Selection Speed Pos Trq		When Enabled
		0 Default	Execute speed ripple compensation in normal mode.	After restart
		1	Execute speed ripple compensation in press operation mode.	
		2	Reserved (Do not use.)	
		3	Reserved (Do not use.)	

8.13 Load Fluctuation Compensation Control

This section describes load fluctuation compensation control.

8.13.1 Outline

Load fluctuation compensation control is used to control fluctuations in response for applications where the load (moment of inertia) fluctuates greatly due to the operating status and posture of the machine, such as robots and transfer equipment.

Load fluctuation compensation control implements operation that suppresses variations in settling time when the load fluctuates ±500% in relation to the set moment of inertia ratio (Pn103) (e.g., if Pn103 is 2000%, between 1500% and 2500%).

This function can be combined with notch filters, anti-resonance control, and model following control.

To use this function, set Pn173 to n.□□□1 (enable load fluctuation compensation control).

Important
- For a machine with low rigidity, such as a machine that vibrates at 100 Hz or less, the variation in settling time may not fall to within 10 ms or less.
- If combined with model following control, overshooting may increase.

8.13.2 Application Restrictions

The restrictions for load fluctuation compensation control are given below.

- Load fluctuation compensation control cannot be used during torque control.
- This function cannot be combined with I-P control, friction compensation, less-deviation control function, or low-frequency control function.
- Load fluctuation compensation control cannot be used if the encoder resolution is 13 bits or less.

8.13.3 Preparations

Always check the following before you execute load fluctuation compensation control.

- The test without a motor function must be disabled (Pn00C = n.□□□0).
- The tuning-less function must be disabled (Pn170 = n.□□□0).
- The parameters must not be write prohibited.

8.13.4 Required Parameter Settings

The following parameter settings are required to use load fluctuation compensation control.

		Load Fluctuation Compensation Control Selection Speed Pos Trq		When Enabled
Pn173 (2173h)	n.□□□X	0 Default	Do not use load fluctuation compensation control.	Immediately
		1	Use load fluctuation compensation control.	

	Moment of Inertia Ratio Speed Pos Trq			
Pn103 (2103h)	Setting Range	Setting Unit	Default Setting	When Enabled
	0 to 65535	1%	100	Immediately

Pn174 (2174h)	Load Fluctuation Compensation Control Response Level			Speed Pos Trq
	Setting Range	Setting Unit	Default Setting	When Enabled
	10 to 20000	0.1	400	Immediately

8.13.5 Operating Procedure

Use the following procedure to perform load fluctuation compensation control.

1. **If Pn170 is set to n.□□□1 (enable tuning-less function), change Pn170 to n.□□□0 (disable tuning-less function), and then turn the SERVOPACK power OFF and ON again.**
2. **Set Pn173 to n.□□□1 (use load fluctuation compensation control).**
3. **Execute various operations so the load increases to the maximum and decreases to the minimum and monitor the moment of inertia ratio.**

   You can use the [Operation] monitor in the SigmaWin+ to check the identified moment of inertia ratio. Refer to the following section for details.

   ☞ *9.2.2 Operation Monitor, Status Monitor, and I/O Monitor on page 498*
4. **Identify the minimum and maximum of the moment of inertia ratio, and set the median value of those two to Pn103 (Moment of Inertia Ratio).**

   Note:

   The fluctuation range of the moment of inertia that can be compensated by this function is ±500%.
5. **Input the references for normal operation from the host controller and operate the servomotor.**
6. **While checking the response with the tracing function, increase Pn174 (Load Fluctuation Compensation Control Response Level). If vibration or residual vibration when stopped increases, set and adjust vibration suppression, such as anti-resonance control and the notch filters. If vibration cannot be sufficiently suppressed with the vibration suppression adjustments, lower Pn174 to a level at which vibration can be tolerated, and then end the adjustments.**

This concludes the procedure to set up load fluctuation compensation control.

8.13.6 Parameters Disabled by a Load Fluctuation Compensation Control

When Pn173 is set to n.□□□1 (when load fluctuation compensation control is enabled), the parameters in the following table are disabled.

Parameter Name	Parameter Number
Speed Loop Gain Second Speed Loop Gain Third Speed Loop Gain Fourth Speed Loop Gain	Pn100 (2100h) Pn104 (2104h) Pn12B (212Bh) Pn12E (212Eh)
Speed Loop Integral Time Constant Second Speed Loop Integral Time Constant Third Speed Loop Integral Time Constant Fourth Speed Loop Integral Time Constant	Pn101 (2101h) Pn105 (2105h) Pn12C (212Ch) Pn12F (212Fh)
Position Loop Gain Second Position Loop Gain Third Position Loop Gain Fourth Position Loop Gain	Pn102 (2102h) Pn106 (2106h) Pn12D (212Dh) Pn130 (2130h)

Continued on next page.

Continued from previous page.

Parameter Name	Parameter Number
Speed Loop Control Method	Pn10B (210Bh) = n.□□X□
Friction Compensation Function Selection	Pn408 (2408h) = n.X□□□
Low-Frequency Control Function Selections	Pn183 (2183h) = n.□□□X
Less-Deviation Control-Related Selections	Pn190 (2190h) = n.□□□X
Gain Switching Selection	Pn139 (2139h) = n.□□□X
First Stage First Torque Reference Filter Time Constant	Pn401 (2401h)

Load fluctuation compensation control is disabled during torque control, Easy FFT, and mechanical analysis for a vertical axis. In addition, Pn100, Pn104, Pn101, Pn105, Pn102, and Pn106 in the above table are enabled for torque control, Easy FFT, and mechanical analysis for a vertical axis. Of these, only Pn100 and Pn104 are enabled for torque control.

Information

Pn401 (First Stage First Torque Reference Filter Time Constant) is disabled, but the torque reference filter time constant that works in conjunction with Pn174 (Load Fluctuation Compensation Control Response Level) is applied to the first stage first torque reference filter.

8.14 Less-Deviation Control Function

8.14.1 Outline

The Less-Deviation Control Function reduces deviation during operations, including during acceleration/deceleration and can improve trajectory tracking. This is used for applications that require reference tracking performance during operations, including the decrease of tracking errors and the prevention of interference between the equipment and moving parts, which can be caused by the influences of position response delay. By combining with model following control, overshooting for positioning can be controlled.

Information This function is available in SERVOPACK software version 000F or later.

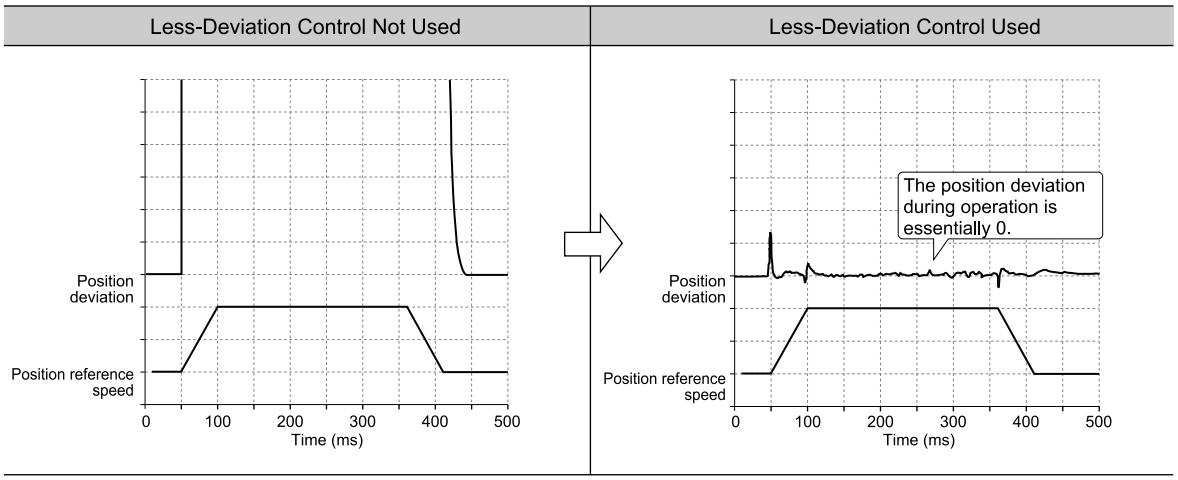

Less-deviation control is enabled or disabled with Pn190 = n.□□□X.

		Less-Deviation Control Selection (Speed / Pos / Trq)		When Enabled
Pn190 (2190h)	n.□□□X	0 Default	Do not use less-deviation control.	After power ON
		1	Use less-deviation control.	

An outline of the control block diagram for Less-Deviation Control is given below. The shaded items can be monitored with the SigmaWin+ or a measuring instrument.

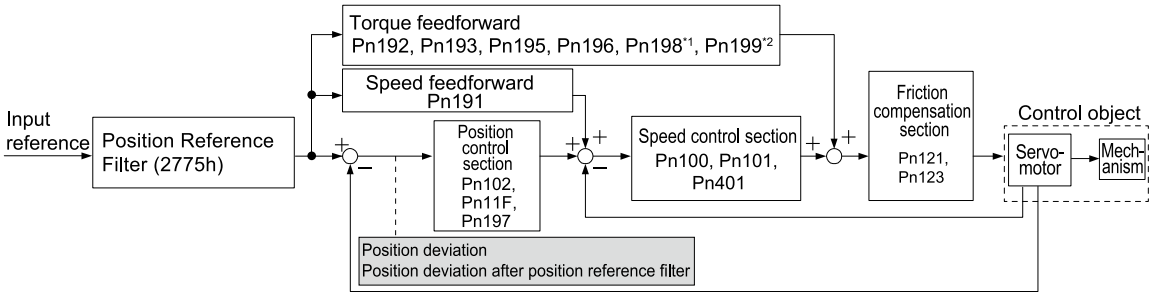

*1 These parameters are used for adjustments for Rotary Servomotors.
*2 These parameters are used for adjustments for Linear Servomotors.

Important

- If you use less-deviation control under any of the following conditions, vibration, noise, or overshooting may occur.
  - Condition 1: The machine has low rigidity. (Guideline: There is a large resonance point in the frequency band from 300 Hz and lower.)
  - Condition 2: The machine has large variations in the load.
  - Condition 3: The resolution of the encoder is low.

  If condition 1 or 2 is met, do not use less-deviation control.
  If condition 3 is met, we recommend using a servomotor with an encoder that has a resolution of 20 bits or higher.
  Also, for fully-closed loop control, we recommend using a linear scale (external encoder) that has a resolution equivalent to the servomotor encoder.
- The optimum feedforward is set inside the SERVOPACK for less-deviation control, so a "speed feedforward input" or "torque feedforward input" from the host controller is normally not used at the same time as less-deviation control.
  However, they can be used together with less-deviation control if necessary. Keep in mind that if they are used together and an inappropriate feedforward value is input, overshooting may occur.

8.14.2 Restrictions

(1) Control Mode Restrictions

Less-deviation control can be used only in Position Control Mode. It cannot be used in Speed Control Mode or Torque Control Mode.

If you change from Speed Control Mode or Torque Control Mode to Position Control Mode, less-deviation control will be enabled after the servomotor stops.

(2) Functional Restrictions

The restrictions for less-deviation control function are given below.

Function	Restriction description
Tuning-less Function (Pn170 = n.□□□X)	The tuning-less function is given precedence. Even in the setting (Pn190 = .□□□1) using less-deviation control, less-deviation control is disabled.
Load Fluctuation Compensation Control (Pn173 = n.□□□X)	The load fluctuation compensation control is given precedence. Even in the setting (Pn190 = .□□□1) using less-deviation control, less-deviation control is disabled.
Feedforward (Pn109)	It cannot be used. It will be disabled even if parameters are set.
Speed loop control method (Pn10B = n.□□X□)	It cannot be used. It will be PI control even if parameters are set.
Automatic Gain Switching (Pn139 = n.□□□2)	Position Integral Time Constant (Pn11F, Pn13F) cannot be switched with Automatic Gain Switching.
Tuning-less Level Setting (Fn200)	It cannot be used.
Advanced Autotuning without Reference (Fn201)	It cannot be used.
Advanced Autotuning with Reference (Fn202)	It cannot be used.
One-Parameter Tuning (Fn203)	Only Tuning Mode 5 (Gain for Less-Deviation Control) is selectable.
Polarity Detection (Fn080)	It cannot be used.
Mechanical Analysis	It cannot be used.
Moment of Inertia Estimation	It cannot be used.

8.14.3 Preparations

Always check the following before you execute Less-Deviation Control Function.

- Position control must be used.
- Pn00C must be set to n.□□□0 (Function Selection for Test without a Motor is disabled).
- Pn170 must be set to n.□□□0 (tuning-less function is disabled).

- Pn173 must be set to n.□□□0 (a load fluctuation compensation control is disabled).
- The parameters must not be write prohibited.

8.14.4 Tuning Flow

The basic tuning procedure is shown in the following flowchart. Make suitable adjustments considering the conditions and operating requirements of your machine.

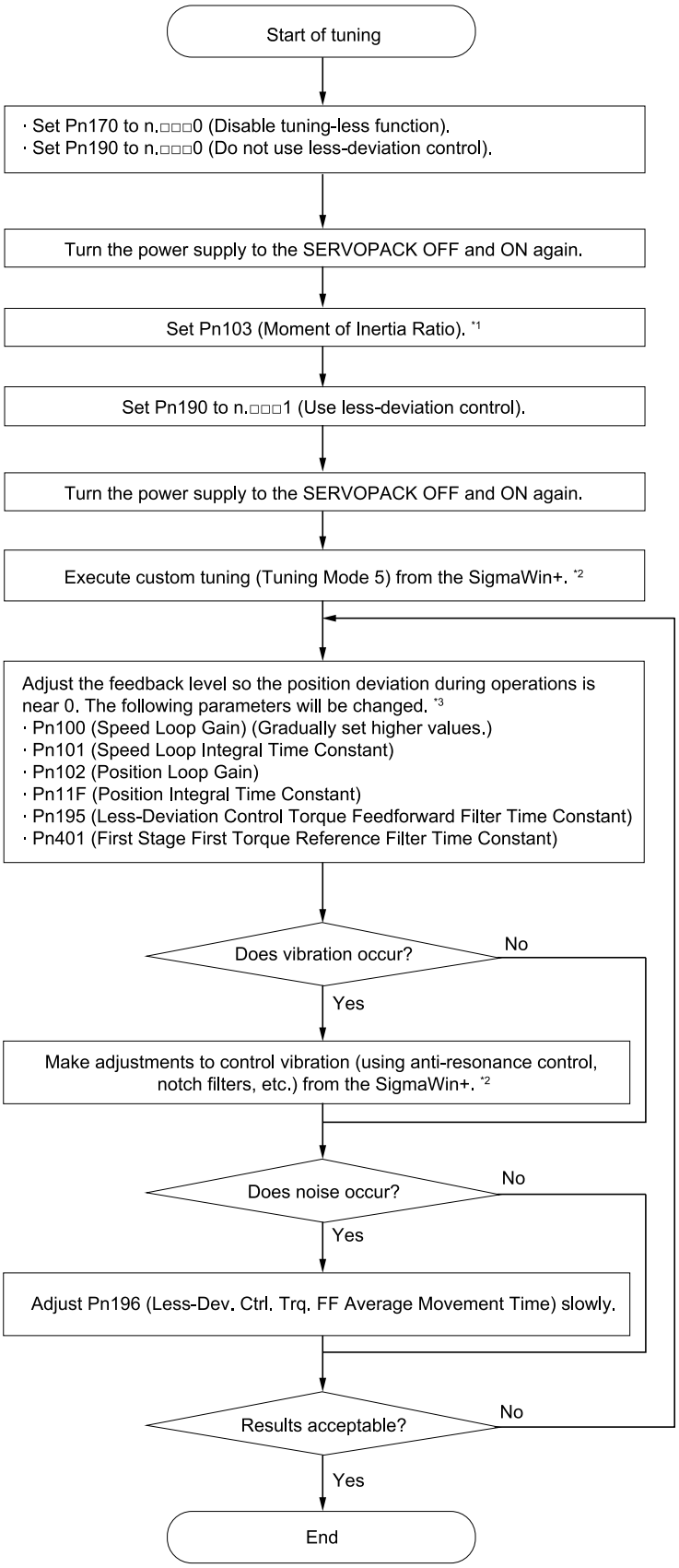

*1 Use one of the following calculation methods.

- Calculate
- Use the following SigmaWin+ function: Moment of Inertia Estimation.

*2 For details, refer to the following section.

☞ *8.9 Custom Tuning on page 402*

*3 Use the following formulas as guidelines to calculate the setting values.

- $Pn101 = \dfrac{2000}{2\pi \times Pn100}$
- $Pn102 = Pn100$
- $Pn11F = \dfrac{4000}{Pn102}$
- $Pn195 = \dfrac{1000}{2 \times 4 \times 2\pi \times Pn100}$
- $Pn401 = \dfrac{1000}{4 \times 2\pi \times Pn100}$

The following setting examples are for Pn100 = 40.0 Hz.

- $Pn101 = \dfrac{2000}{2\pi \times 40.0} \cong 7.96$
- $Pn102 = 40.0$
- $Pn11F = \dfrac{4000}{40.0} = 100.0$
- $Pn195 = \dfrac{1000}{2 \times 4 \times 2\pi \times 40.0} \cong 0.50$
- $Pn401 = \dfrac{1000}{4 \times 2\pi \times 40.0} \cong 0.99$

8.14.5 Adjustment Example

(1) Custom Tuning (Tuning Mode 5) Tuning Example

Tuning the feedback level with custom tuning (tuning mode 5) will autotune Pn100 (Speed Loop Gain), Pn101 (Speed Loop Integral Time Constant), Pn102 (Position Loop Gain), Pn11F (Position Integral Time Constant), Pn195 (Less-Deviation Control Torque Feedforward Filter Time Constant), and Pn401 (First Stage First Torque Reference Filter Time Constant). The effects of feedback level tuning are shown below.

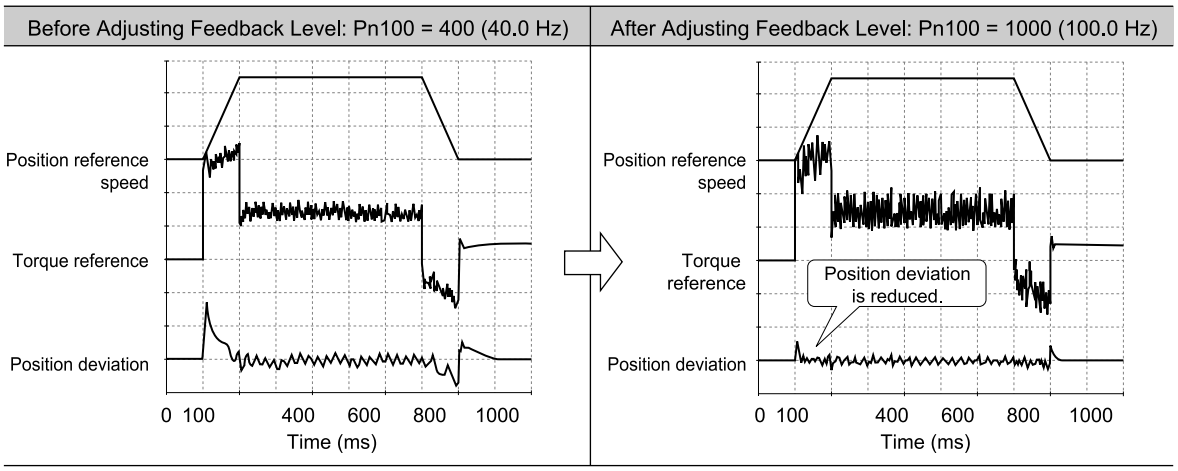

(2) Pn191 (Less-Deviation Control Speed Feedforward Gain) tuning example

Speed feedforward is used for less-deviation control. Pn191 is a speed feedforward compensation amount tuning parameter.

Set to 100.0% to have deviation be 0 during operation.

Pn191 (2191h)	Less-Deviation Control Speed Feedforward Gain			Speed Pos Trq
	Setting Range	Setting Unit	Default Setting	When Enabled
	0 to 10000	0.1%	1000	Immediately

(3) Pn192 and Pn193 Tuning Example for Less-Deviation Control Torque Feedforward Gains

The effects of Pn192 (Less-Deviation Control Forward Torque Feedforward Gain) and Pn193 (Less-Deviation Control Reverse Torque Feedforward Gain) are shown below.

Torque feedforward is used for less-deviation control. The torque feedforward operation takes the differential of the input position reference, converts it to an acceleration rate, and multiplies it by the setting of Pn103 (Moment of Inertia Ratio). Therefore, if the setting of Pn103 is smaller than the actual moment of inertia ratio, the effectiveness of reducing the position deviation will be diminished. On the other hand, if the setting of Pn103 is larger than the actual moment of inertia ratio, the position deviation can easily result in overshooting.

In this type of case, you can change the settings of Pn192 and Pn193 to effectively achieve the same things as changing Pn103 only for torque feedback.

Information

It is best to correctly set Pn103 (Moment of Inertia Ratio) rather than to adjust the settings of Pn192 and Pn193. However, Pn103 will affect the entire control loop, so changing only the torque feedforward amounts (Pn192 and Pn193) after completing gain tuning is useful for fine-tuning.

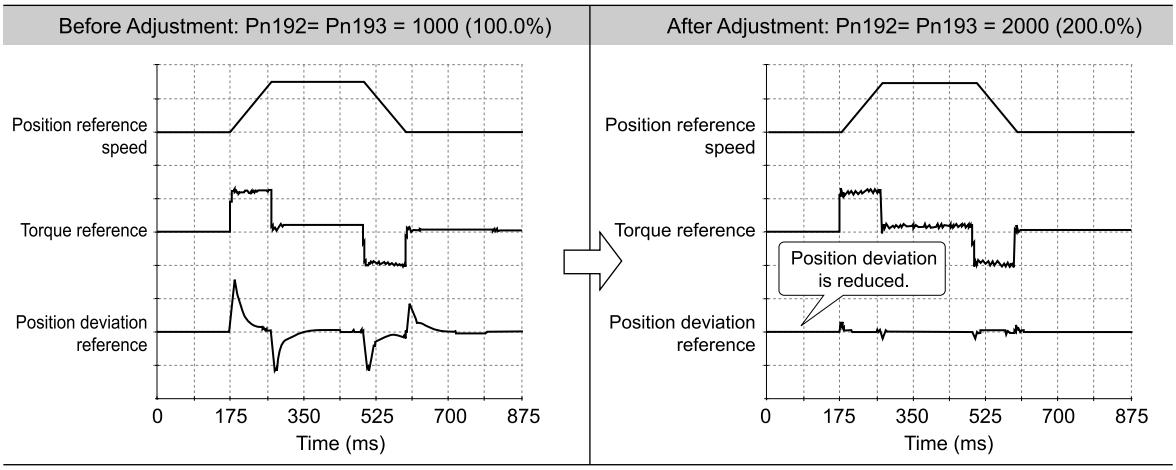

(4) Pn195 and Pn196 (Less-Deviation Control Torque Feedforward Filter Time Constant, Movement Average Time) tuning example

If vibration or noise occurs during operation, increase the setting of Pn195 (Less-Deviation Control Torque Feedforward Filter Time Constant) and Pn196 (Less-Dev. Ctrl. Trq. FF Average Movement Time) to reduce vibration and noise. However, position deviation may increase when you do so. The effects of Pn195 (Less-Deviation Control Torque Feedforward Filter Time Constant) are shown below.

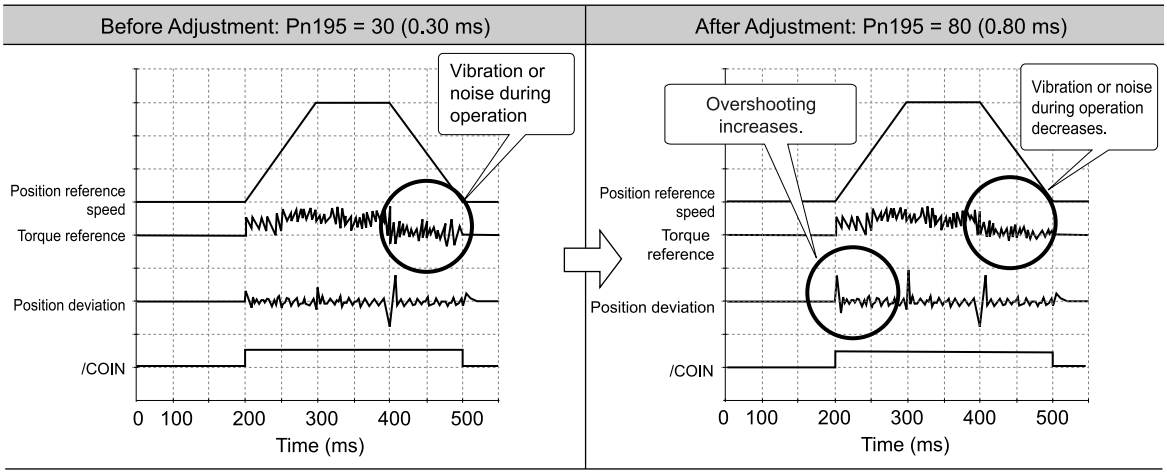

(5) Pn197 (Less-Deviation Control Incomplete Integration Rate) tuning example

With less-deviation control, the position integral is used to bring the position deviation close to 0 during constant-speed operation. However, a long period of time is normally required for the position deviation to converge to 0 with only position integration. To reduce that trend, the incomplete integral, for which the integral effect

falls off with time, is also used. Default setting for the Pn197 (Less-Deviation Control Incomplete Integration Rate) is 10000 (100%). In other words, 100% of the previous output from integrator will be subtracted from the current input to the integrator every control cycle.

Therefore, when the deviation settles, the effectiveness of the position integral is lost. However, you can set this parameter to a lower value to increase positioning capability when stopping if you are willing to accept a somewhat longer settling time. If you set this parameter to 0%, operation will be the same as for a normal integrator.

The effects of Pn197 (Less-Deviation Control Incomplete Integration Rate) are shown below.

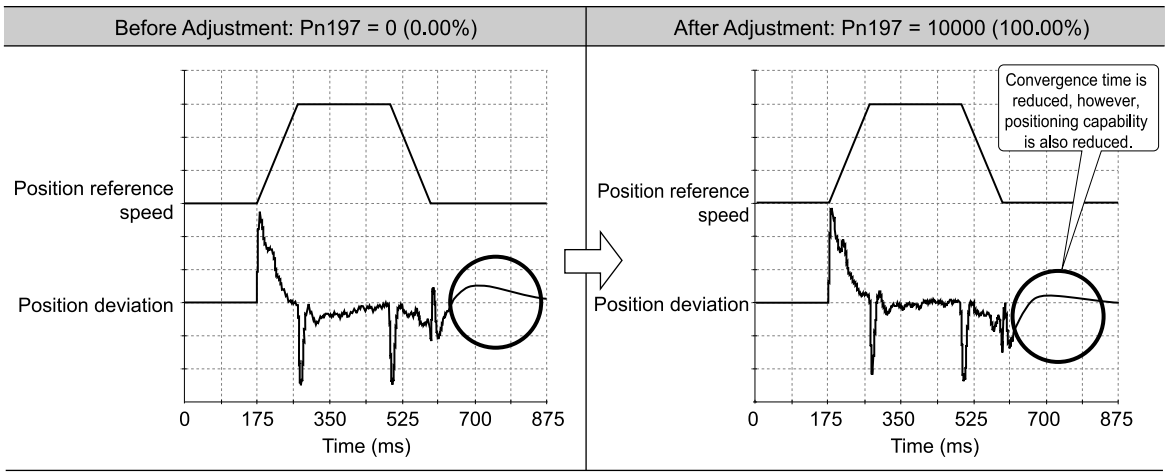

(6) Pn198 and Pn199 (Less-Deviation Control Viscous Friction Compensation Coefficients) tuning example

For mechanisms that are greatly affected by viscous friction, the effectiveness of torque feedforward is reduced. To allow for this, set the following parameters.

Pn198 (2198h)	Less-Dev. Ctrl. Rot. Servomotor Viscous Fric. Comp. Coeff.			Speed **Pos** Trq
	Setting Range	Setting Unit	Default Setting	When Enabled
	0 to 8000	0.01%/100 min^{-1}	0	Immediately
Pn199 (2199h)	Less-Dev. Ctrl. Lin. Servomotor Viscous Fric. Comp. Coeff.			Speed **Pos** Trq
	Setting Range	Setting Unit	Default Setting	When Enabled
	0 to 8000	0.01%/100 mm/s	0	Immediately

By setting one of the above parameters, an equivalent viscous friction torque is added to the torque feedforward.

Set Pn198 (Less-Dev. Ctrl. Rot. Servomotor Viscous Fric. Comp. Coeff.) to the percentage of the rated torque [N·m] that occurs at a servomotor speed of 100 min^{-1}.

The calculation examples for the setting of Pn198 are given below.

1. **Operate the servomotor at a constant speed of 1000 min^{-1}.**
2. **Use a tracing operation on the SigmaWin+ to measure the torque at the speed in step 1.**

   Measurement Result Torque: 7.5%
3. **Torque is calculated when the servomotor rotation speed is 100 min^{-1}.**

   Pn198 = Torque at speed in step 1 × 100 min^{-1} ÷ Speed in step 1

   = 7.5% × 100 min^{-1} ÷ 1000 min^{-1}

   = 0.75%

The effects of Pn198 (Less-Dev. Ctrl. Rot. Servomotor Viscous Fric. Comp. Coeff.) are shown below.

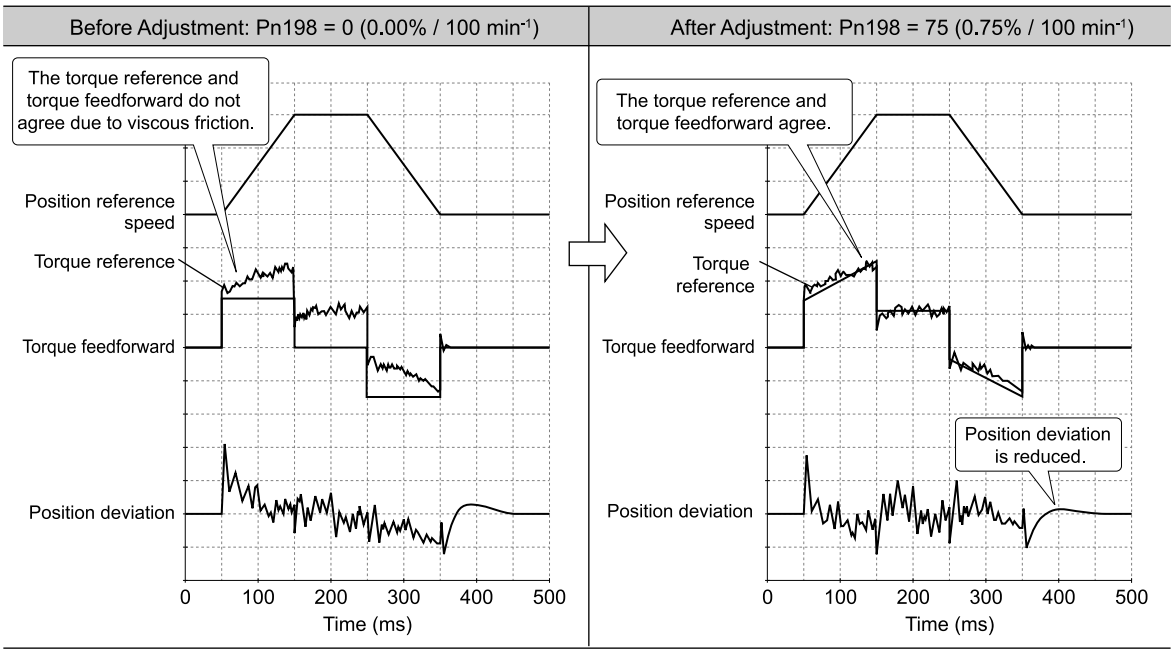

(7) Pn19A (Model Follow. Ctrl. Less-Dev. Ctrl. Trq. FF Comp. App. Rate) Tuning Example

When positioning, after tuning feedback control gain (Pn100 to Pn103, Pn401, etc.) and parameters related to model following control (Pn140 to Pn144, etc.), tune Pn19A (Model Follow. Ctrl. Less-Dev. Ctrl. Trq. FF Comp. App. Rate) so that overshoot during settling is reduced.

For details, refer to the following section.

☞ *(c) Model Following Control Less-Deviation Control Torque FF Compensation Application Rate on page 481*

The effects of Pn19A (Model Follow. Ctrl. Less-Dev. Ctrl. Trq. FF Comp. App. Rate) are shown below.

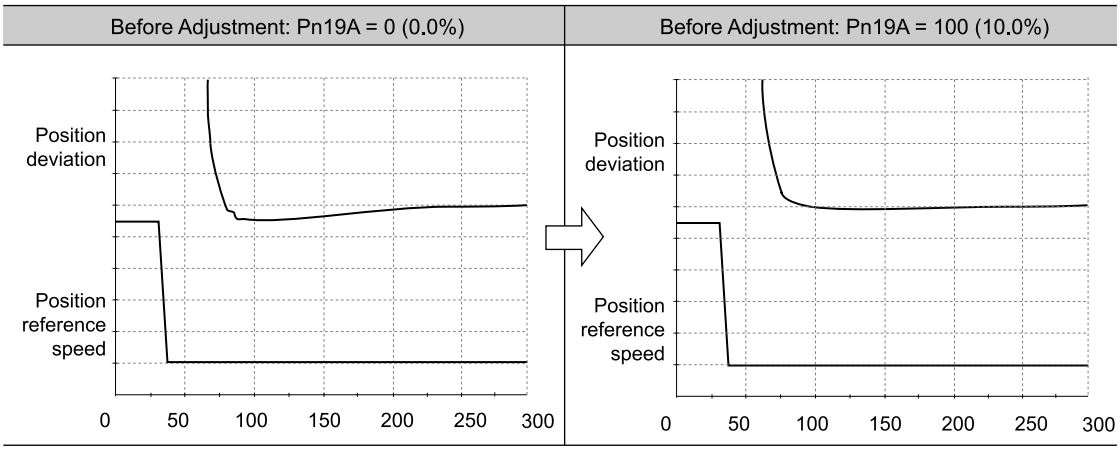

8.14.6 Gain Switching Combinations

You can use gain switching to shorten the positioning time by increasing the gains during positioning and suppressing vibration by decreasing the gains while stopping.

Selected Gains	Speed Loop Gain	Speed Loop Integral Time Constant	Position Loop Gain	Position Integral Time Constant *1	Torque Reference Filter	Friction Compensation Gain
Gain 1	Pn100 (Speed Loop Gain)	Pn101 (Speed Loop Integral Time Constant)	Pn102 (Position Loop Gain)	Pn11F (Position Integral Time Constant)	Pn401 (First Stage First Torque Reference Filter Time Constant)	Pn121 (Friction Compensation Gain)
Gain 2	Pn104 (Second Speed Loop Gain)	Pn105 (Second Speed Loop Integral Time Constant)	Pn106 (Second Position Loop Gain)	Pn13F (Less-Deviation Control Second Pos. Integral Time Constant)	Pn412 (First Stage Second Torque Reference Filter Time Constant)	Pn122 (Second Friction Compensation Gain)
Gain 3 *1	Pn12B (Third Speed Loop Gain)	Pn12C (Third Speed Loop Integral Time Constant)	Pn12D (Third Position Loop Gain)	Pn11F (Position Integral Time Constant)	Pn413 (First Stage Third Torque Reference Filter Time Constant)	Pn129 (Third Friction Compensation Gain)
Gain 4 *1	Pn12E (Fourth Speed Loop Gain)	Pn12F (Fourth Speed Loop Integral Time Constant)	Pn130 (Fourth Position Loop Gain)	Pn11F (Position Integral Time Constant)	Pn414 (First Stage Fourth Torque Reference Filter Time Constant)	Pn12A (Fourth Friction Compensation Gain)

*1 When using automatic gain switching, it cannot be changed.

8.14.7 Gain Selection Method

To change the gain from gain 1 to gain 4, you use bits 12 and 13 (G_Sel) in the EtherCat object Controlword_VenderS (2776h).

Bit	Function	Description
12, 13	G-Sel	Used to change the gain. 0: Select gain 1 1: Select gain 2 2: Select gain 3 3: Select gain 4

Note:

You can change to gain 3 and gain 4 only when using manual gain switching.

1. **Make sure that Pn139 is set to n.□□□0 (manual gain switching).**
2. **While the servomotor is stopped, input /G_SEL signal.**
3. **Wait for at least 2 ms before inputting other commands (positioning, etc.).**

8.14.8 Monitor the Position Deviation after the Position Reference Filter

The following two methods are available for monitoring the position deviation after the position reference filter.

- Use the trace function of the SigmaWin+.
- Use a measuring instrument, such as a memory recorder.

If using the SigmaWin+ trace function, select “Position Deviation After Position Ref. Filter” from [Data Tracing] on the [Trace Setting] window. Refer to the following section for how to display the [Trace Setting] window.

☞ *(1) Operating Procedure on page 507*

If using a measuring instrument, connect a measuring instrument to the analog monitor connector (CN5) on the SERVOPACK. For items to monitor, set Pn006 to n.□□13 or Pn007 to n.□□13 (position deviation after the position reference filter for analog monitor 1 or 2 signal).

8.15 Additional Adjustment Functions

This section describes the functions that you can use to make adjustments after you perform autotuning without a host reference, autotuning with a host reference, and custom tuning.

Function	Applicable Control Methods	Reference
Gain Switching	Position control, speed control, or torque control *1	☞ *8.15.1 Gain Switching on page 455*
Friction Compensation	Position control or speed control	☞ *8.15.2 Friction Compensation on page 460*
Gravity Compensation	Position control, speed control, or torque control	☞ *8.15.3 Gravity Compensation on page 462*
Output Torque Compensation	Position control, speed control, or torque control	☞ *8.15.4 Output Torque Compensation on page 463*
Current Control Mode Selection	Position control, speed control, or torque control	☞ *8.15.5 Current Control Mode Selection on page 464*
Current Gain Level Setting	Position control or speed control	☞ *8.15.6 Current Gain Level Setting on page 464*
Speed Detection Method Selection	Position control, speed control, or torque control	☞ *8.15.7 Speed Detection Method Selection on page 464*
Speed Feedback Filter	Position control or speed control	☞ *8.15.8 Speed Feedback Filter on page 465*
Backlash Compensation	Position control	☞ *8.15.9 Backlash Compensation on page 465*

*1 Automatic gain switching is enabled only for position control.

8.15.1 Gain Switching

Two gain switching functions are available, manual switching and automatic switching. The manual switching function uses an external input signal to select the gains, and the automatic switching function changes the gains automatically.

You can use gain switching to shorten the positioning time by increasing the gains during positioning and suppressing vibration by decreasing the gains while stopping.

		Gain Switching Selection (Speed / Pos / Trq)		When Enabled
Pn139 (2139h)	n.□□□X	0 Default	The gain is switched manually with bits 12 and 13 (G-Sel) in Controlword_VendorS (2776h).	Immediately
		1	Reserved (Do not use.)	
		2	Use automatic gain switching pattern 1. The gain settings 1 switch automatically to 2 when switching condition A is satisfied. The gain settings 2 switch automatically to 1 when switching condition A is not satisfied.	

Note:

n.□□□1 is a reserved setting. Do not use this setting.

Refer to the following section for gain switching combinations.

☞ *(1) Gain Switching Combinations on page 456*

Refer to the following sections for information on manual and automatic gain switching.

☞ *(2) Manual Gain Switching on page 456*

☞ *(3) Automatic Gain Switching on page 456*

(1) Gain Switching Combinations

Selected Gains	Speed Loop Gain	Speed Loop Integral Time Constant	Position Loop Gain	Torque Reference Filter	Model Following Control Gain *2	Model Following Control Gain Correction *2	Friction Compensation Gain
Gain 1	Pn100 (Speed Loop Gain)	Pn101 (Speed Loop Integral Time Constant)	Pn102 (Position Loop Gain)	Pn401 (First Stage First Torque Reference Filter Time Constant)	Pn141 (Model Following Control Gain)	Pn142 (Model Following Control Gain Correction)	Pn121 (Friction Compensation Gain)
Gain 2	Pn104 (Second Speed Loop Gain)	Pn105 (Second Speed Loop Integral Time Constant)	Pn106 (Second Position Loop Gain)	Pn412 (First Stage Second Torque Reference Filter Time Constant)	Pn148 (Second Model Following Control Gain)	Pn149 (Second Model Following Control Gain Correction)	Pn122 (Second Friction Compensation Gain)
Gain 3 *1	Pn12B (Third Speed Loop Gain)	Pn12C (Third Speed Loop Integral Time Constant)	Pn12D (Third Position Loop Gain)	Pn413 (First Stage Third Torque Reference Filter Time Constant)	Pn15B (Third Model Following Control Gain)	Pn15C (Third Model Following Control Gain Correction)	Pn129 (Third Friction Compensation Gain)
Gain 4 *1	Pn12E (Fourth Speed Loop Gain)	Pn12F (Fourth Speed Loop Integral Time Constant)	Pn130 (Fourth Position Loop Gain)	Pn414 (First Stage Fourth Torque Reference Filter Time Constant)	Pn15D (Fourth Model Following Control Gain)	Pn15E (Fourth Model Following Control Gain Correction)	Pn12A (Fourth Friction Compensation Gain)

*1 When using automatic gain switching, it cannot be changed.

*2 Gain switching for the model following control gain and the model following control gain correction is applicable only to manual gain switching.
To enable gain switching with these parameters, a gain switching input signal must be used and the following conditions must be met.
If the conditions are not met, these parameters will not be changed even if the other parameters in the above table are changed.

- There must be no reference.
- The motor must be stopped.

(2) Manual Gain Switching

With manual gain switching, you use bits 12 and 13 (G_Sel) in the EtherCat object Controlword_VenderS (2776h) to change the gain from gain 1 to gain 4.

While the motor is stopped, input /G-SEL, and then after 2 ms or longer has elapsed, input the reference (e.g., positioning).

Bit	Function	Description
12, 13	G-Sel	Used to change the gain. 0: Select gain 1 1: Select gain 2 2: Select gain 3 3: Select gain 4

(3) Automatic Gain Switching

Automatic gain switching is enabled only for position control. The switching conditions are specified by using the following settings.

Parameter		Switching Condition	Selected Gains	Switching Waiting Time	Switching Time
Pn139 (2139h)	n.□□□2	Condition A satisfied	Gain 1 to gain 2	Gain Switching Waiting Time 1 Pn135	Gain Switching Time 1 Pn131
		Condition A not satisfied	Gain 2 to gain 1	Gain Switching Waiting Time 2 Pn136	Gain Switching Time 2 Pn132

Select one of the following settings for switching condition A.

Parameter		Position Control Gain Switching Condition A	For Control Methods Other Than Position Control (No Switching)	When Enabled
Pn139 (2139h)	n.□□0□ (default setting)	/COIN (Positioning Completion) signal ON	Gain 1 used.	Immediately
	n.□□1□	/COIN (Positioning Completion) signal OFF	Gain 2 used.	
	n.□□2□	/NEAR (Near) signal ON	Gain 1 used.	
	n.□□3□	/NEAR (Near) signal OFF	Gain 2 used.	
	n.□□4□	Position reference filter output is 0 and position reference input is OFF.	Gain 1 used.	
	n.□□5□	Position reference input is ON.	Gain 2 used.	

Pn139 = n.□□□2 (use automatic gain switching pattern 1)

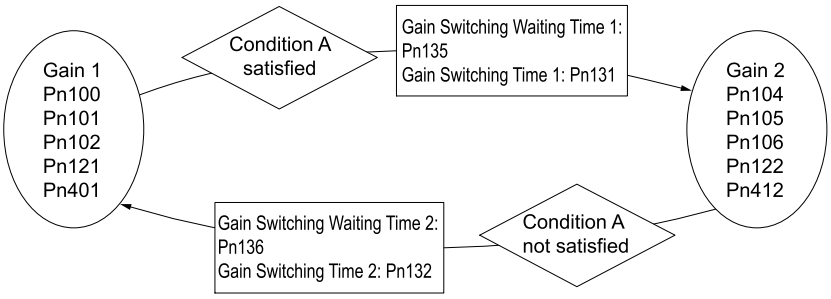

(a) Relationship between the Waiting Times and Switching Times for Gain Switching

In this example, an ON /COIN (Positioning Completion Input) signal is set as condition A for automatic gain switching. The position loop gain is changed from the value in Pn102 (Position Loop Gain) to the value in Pn106 (Second Position Loop Gain). When the /COIN signal turns ON, the switching operation begins after Pn135 (Gain Switching Waiting Time 1). The switching operation changes the position loop gain linearly from the gain set in Pn102 to the gain set in Pn106 over Pn131 (Gain Switching Time 1).

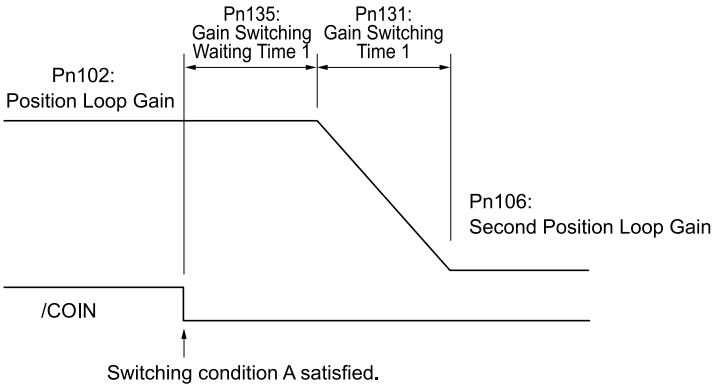

Information Gain switching can be performed when Pn10B is set to n.□□0□ or n.□□1□ (Speed Loop Control Method is PI control or I-P control).

(4) Related Parameters

Pn100 (2100h)	Speed Loop Gain			Speed Pos Trq
	Setting Range	Setting Unit	Default Setting	When Enabled
	10 to 20000	0.1 Hz	400	Immediately
Pn101 (2101h)	Speed Loop Integral Time Constant			Speed Pos Trq
	Setting Range	Setting Unit	Default Setting	When Enabled
	15 to 51200	0.01 ms	2000	Immediately

Continued on next page.

Continued from previous page.

Pn102 (2102h)	Position Loop Gain			Speed Pos Trq
	Setting Range	Setting Unit	Default Setting	When Enabled
	10 to 20000	0.1/s	400	Immediately
Pn401 (2401h)	First Stage First Torque Reference Filter Time Constant			Speed Pos Trq
	Setting Range	Setting Unit	Default Setting	When Enabled
	0 to 65535	0.01 ms	100	Immediately
Pn141 (2141h)	Model Following Control Gain			Speed Pos Trq
	Setting Range	Setting Unit	Default Setting	When Enabled
	10 to 20000	0.1/s	500	Immediately
Pn142 (2142h)	Model Following Control Gain Correction			Speed Pos Trq
	Setting Range	Setting Unit	Default Setting	When Enabled
	500 to 2000	0.1%	1000	Immediately
Pn121 (2121h)	Friction Compensation Gain			Speed Pos Trq
	Setting Range	Setting Unit	Default Setting	When Enabled
	10 to 1000	1%	100	Immediately
Pn104 (2104h)	Second Speed Loop Gain			Speed Pos Trq
	Setting Range	Setting Unit	Default Setting	When Enabled
	10 to 20000	0.1 Hz	400	Immediately
Pn105 (2105h)	Second Speed Loop Integral Time Constant			Speed Pos Trq
	Setting Range	Setting Unit	Default Setting	When Enabled
	15 to 51200	0.01 ms	2000	Immediately
Pn106 (2106h)	Second Position Loop Gain			Speed Pos Trq
	Setting Range	Setting Unit	Default Setting	When Enabled
	10 to 20000	0.1/s	400	Immediately
Pn412 (2412h)	First Stage Second Torque Reference Filter Time Constant			Speed Pos Trq
	Setting Range	Setting Unit	Default Setting	When Enabled
	0 to 65535	0.01 ms	100	Immediately
Pn148 (2148h)	Second Model Following Control Gain			Speed Pos Trq
	Setting Range	Setting Unit	Default Setting	When Enabled
	10 to 20000	0.1/s	500	Immediately
Pn149 (2149h)	Second Model Following Control Gain Correction			Speed Pos Trq
	Setting Range	Setting Unit	Default Setting	When Enabled
	500 to 2000	0.1%	1000	Immediately
Pn122 (2122h)	Second Friction Compensation Gain			Speed Pos Trq
	Setting Range	Setting Unit	Default Setting	When Enabled
	10 to 1000	1%	100	Immediately
Pn12B (212Bh)	Third Speed Loop Gain			Speed Pos Trq
	Setting Range	Setting Unit	Default Setting	When Enabled
	10 to 20000	0.1 Hz	400	Immediately
Pn12C (212Ch)	Third Speed Loop Integral Time Constant			Speed Pos Trq
	Setting Range	Setting Unit	Default Setting	When Enabled
	15 to 51200	0.01 ms	2000	Immediately

Continued on next page.

Continued from previous page.

Pn12D (212Dh)	Third Position Loop Gain			Speed Pos Trq
	Setting Range	Setting Unit	Default Setting	When Enabled
	10 to 20000	0.1/s	400	Immediately
Pn413 (2413h)	First Stage Third Torque Reference Filter Time Constant			Speed Pos Trq
	Setting Range	Setting Unit	Default Setting	When Enabled
	0 to 65535	0.01 ms	100	Immediately
Pn15B (215Bh)	Third Model Following Control Gain			Speed Pos Trq
	Setting Range	Setting Unit	Default Setting	When Enabled
	10 to 20000	0.1/s	500	Immediately
Pn15C (215Ch)	Third Model Following Control Gain Correction			Speed Pos Trq
	Setting Range	Setting Unit	Default Setting	When Enabled
	500 to 2000	0.1%	1000	Immediately
Pn129 (2129h)	Third Friction Compensation Gain			Speed Pos Trq
	Setting Range	Setting Unit	Default Setting	When Enabled
	10 to 1000	1%	100	Immediately
Pn12E (212Eh)	Fourth Speed Loop Gain			Speed Pos Trq
	Setting Range	Setting Unit	Default Setting	When Enabled
	10 to 20000	0.1 Hz	400	Immediately
Pn12F (212Fh)	Fourth Speed Loop Integral Time Constant			Speed Pos Trq
	Setting Range	Setting Unit	Default Setting	When Enabled
	15 to 51200	0.01 ms	2000	Immediately
Pn130 (2130h)	Fourth Position Loop Gain			Speed Pos Trq
	Setting Range	Setting Unit	Default Setting	When Enabled
	10 to 20000	0.1/s	400	Immediately
Pn414 (2414h)	First Stage Fourth Torque Reference Filter Time Constant			Speed Pos Trq
	Setting Range	Setting Unit	Default Setting	When Enabled
	0 to 65535	0.01 ms	100	Immediately
Pn15D (215Dh)	Fourth Model Following Control Gain			Speed Pos Trq
	Setting Range	Setting Unit	Default Setting	When Enabled
	10 to 20000	0.1/s	500	Immediately
Pn15E (215Eh)	Fourth Model Following Control Gain Correction			Speed Pos Trq
	Setting Range	Setting Unit	Default Setting	When Enabled
	500 to 2000	0.1%	1000	Immediately
Pn12A (212Ah)	Fourth Friction Compensation Gain			Speed Pos Trq
	Setting Range	Setting Unit	Default Setting	When Enabled
	10 to 1000	1%	100	Immediately

(5) Parameters Related to Automatic Gain Switching

Pn131 (2131h)	Gain Switching Time 1			Speed Pos Trq
	Setting Range	Setting Unit	Default Setting	When Enabled
	0 to 65535	1 ms	0	Immediately
Pn132 (2132h)	Gain Switching Time 2			Speed Pos Trq
	Setting Range	Setting Unit	Default Setting	When Enabled
	0 to 65535	1 ms	0	Immediately
Pn135 (2135h)	Gain Switching Waiting Time 1			Speed Pos Trq
	Setting Range	Setting Unit	Default Setting	When Enabled
	0 to 65535	1 ms	0	Immediately
Pn136 (2136h)	Gain Switching Waiting Time 2			Speed Pos Trq
	Setting Range	Setting Unit	Default Setting	When Enabled
	0 to 65535	1 ms	0	Immediately

(6) Related Monitoring

- SigmaWin+
  You can monitor gain switching with the status monitor or with tracing.
- Analog Monitor

Parameter	Analog Monitor	Monitor Name	Output Value	Meaning
Pn006 (2006h) Pn007 (2007h)	n.□□0B	Active Gain Monitor	1 V	Gain 1 is enabled.
			2 V	Gain 2 is enabled.
			3 V	Gain 3 is enabled.
			4 V	Gain 4 is enabled.

8.15.2 Friction Compensation

Friction compensation is used to compensate for viscous friction fluctuations and regular load fluctuations.

You can automatically adjust friction compensation with autotuning without a host reference, autotuning with a host reference, or custom tuning, or you can manually adjust it with the following procedure.

(1) Required Parameter Settings

The following parameter settings are required to use friction compensation.

Pn408 (2408h)	n.X□□□	Friction Compensation Function Selection	Speed Pos Trq	When Enabled
		0 Default	Disable friction compensation.	Immediately
		1	Enable friction compensation.	

Pn121 (2121h)	Friction Compensation Gain			Speed Pos Trq
	Setting Range	Setting Unit	Default Setting	When Enabled
	10 to 1000	1%	100	Immediately
Pn122 (2122h)	Second Friction Compensation Gain			Speed Pos Trq
	Setting Range	Setting Unit	Default Setting	When Enabled
	10 to 1000	1%	100	Immediately

Continued on next page.

Continued from previous page.

Pn129 (2129h)	Third Friction Compensation Gain			Speed Pos Trq
	Setting Range	Setting Unit	Default Setting	When Enabled
	10 to 1000	1%	100	Immediately
Pn12A (212Ah)	Fourth Friction Compensation Gain			Speed Pos Trq
	Setting Range	Setting Unit	Default Setting	When Enabled
	10 to 1000	1%	100	Immediately
Pn123 (2123h)	Friction Compensation Coefficient			Speed Pos Trq
	Setting Range	Setting Unit	Default Setting	When Enabled
	0 to 100	1%	0	Immediately
Pn124 (2124h)	Friction Compensation Frequency Correction			Speed Pos Trq
	Setting Range	Setting Unit	Default Setting	When Enabled
	-10000 to 10000	0.1 Hz	0	Immediately
Pn125 (2125h)	Friction Compensation Gain Correction			Speed Pos Trq
	Setting Range	Setting Unit	Default Setting	When Enabled
	1 to 1000	1%	100	Immediately

(2) Operating Procedure for Friction Compensation

Use the following procedure to perform friction compensation.

⚠ CAUTION

Before you execute this function, set Pn103 (Moment of Inertia Ratio) correctly. If the setting greatly differs from the actual moment of inertia ratio, normal control of the machine may not be possible, and vibration may result.

Step	Operation
1	Set the following parameters related to friction compensation to their default settings. Pn121 (Friction Compensation Gain) → default setting: 100 Pn122 (Second Friction Compensation Gain) → default setting: 100 Pn129 (Third Friction Compensation Gain) → default setting: 100 Pn12A (Fourth Friction Compensation Gain) → default setting: 100 Pn123 (Friction Compensation Coefficient) → default setting: 0 Pn124 (Friction Compensation Frequency Correction) → default setting: 0 Pn125 (Friction Compensation Gain Correction) → default setting: 100 **Note:** Always use the default settings for Pn124 (Friction Compensation Frequency Correction) and Pn125 (Friction Compensation Gain Correction).
2	Gradually increase the setting of Pn123 (Friction Compensation Coefficient) to check the effect of friction compensation. **Note:** Usually, set Pn123 (Friction Compensation Coefficient) to 95% or less. If the effect is insufficient, increase the setting of Pn121 (Friction Compensation Gain) by 10% increments until vibration stops. Effect of Adjusted Parameters Pn121: Friction Compensation Gain, Pn122: Second Friction Compensation Gain, Pn122: Third Friction Compensation Gain, and Pn122: Fourth Friction Compensation Gain These parameters set the response to external disturbances. The higher the setting is, the better the response will be. If the machine has a resonance frequency, however, vibration may occur if the setting is too high. Pn123: Friction Compensation Coefficient This parameter sets the effect of friction compensation. The higher the setting is, the more effective friction compensation will be. If the setting is too high, however, vibration will occur more easily. Usually, set the value to 95% or less.
3	Effect of Adjustments The following graphs show the response with and without adjustment. 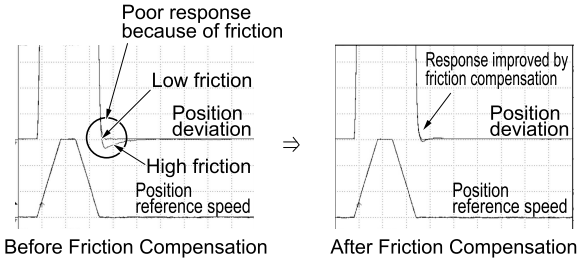

8.15.3 Gravity Compensation

When the servomotor is used with a vertical axis, gravity compensation prevents the moving part from falling due to the machine's own weight when the brake is released.

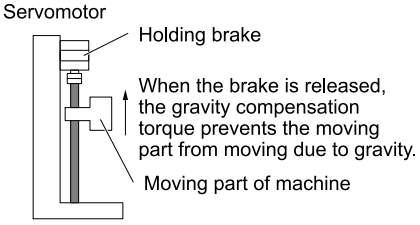

A timing chart for when the moving part is raised then lowered is provided below.

Refer to the following section for details on brake operation timing.

☞ *5.11.1 Brake Operating Sequence on page 200*

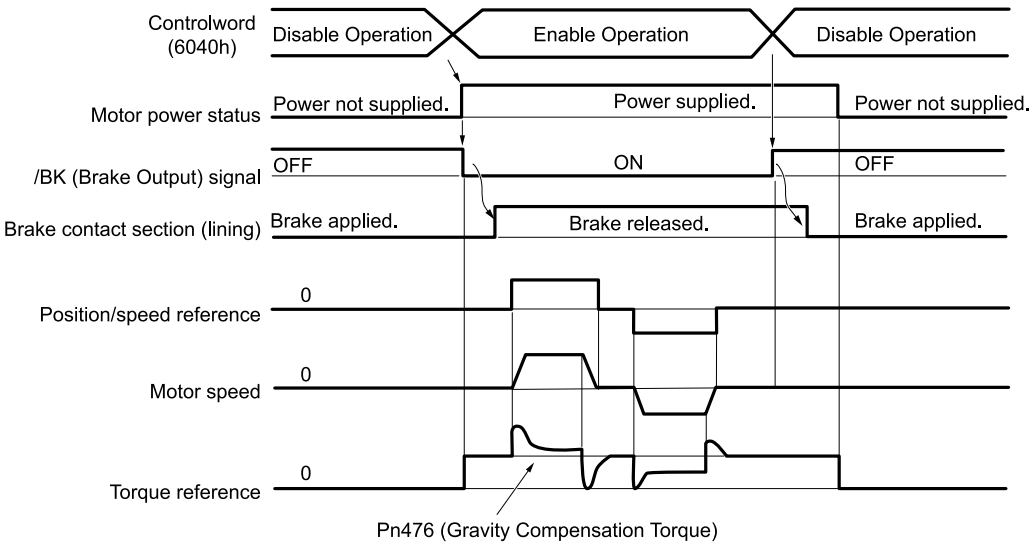

(1) Required Parameter Settings

The following parameter settings are required to use gravity compensation.

		Gravity Compensation Selection		Speed Pos Trq	When Enabled
Pn475 (2475h)	n.□□□X	0 Default	Disable gravity compensation.		After restart
		1	Enable gravity compensation.		

	Gravity Compensation Torque			Speed Pos Trq
Pn476 (2476h)	Setting Range	Setting Unit	Default Setting	When Enabled
	-1000 to 1000	0.1%	0	Immediately

(2) Operating Procedure for Gravity Compensation

Use the following procedure to perform gravity compensation.

1. **Set Pn475 to n.□□□1 (enable gravity compensation).**
2. **To enable changes to the settings, turn the power to the SERVOPACK OFF and ON again.**
3. **Use SigmaWin+ or an analog monitor to find the torque reference value when the motor is stopped with the servo ON.**
4. **Set the torque reference value found in step 3 in Pn476 (Gravity Compensation Torque).**
5. **Turn the servo ON and OFF a few times and fine-tune Pn476 so that the moving part of the machine does not fall.**

8.15.4 Output Torque Compensation

Output torque compensation is used to compensate the offset from the torque reference for output torque.

Output torque may become offset from the reference value due to motor temperature and load status, and this offset can be reduced with compensation.

This function is enabled by default. To disable this function, set Pn428 to n.□□□0 (disable output torque compensation).

		Output Torque Compensation Function Selection Speed Pos Trq		When Enabled
Pn428 (2428h)	n.□□□X	0	Disable output torque compensation.	After restart
		1 Default	Enable output torque compensation.	

8.15.5 Current Control Mode Selection

Current control mode selection reduces noise while the servomotor is being stopped and during high-speed rotation.

To use this function, set Pn009 to n.□□2□ (current control mode 2), Pn009 to n.□□3□ (current control mode 3), or Pn009 to n.□□4□ (current control mode 4).

		Current Control Mode Selection Speed Pos Trq		When Enabled
Pn009 (2009h)	n.□□X□	0	Use current control mode 1.	After restart
		1	• SERVOPACK Models SGDXS-R70A to -7R6A and -1R9D: Use current control mode 1. • SERVOPACK Models SGDXS-120A to -780A and -3R5D to -370D: Use current control mode 2. (For noise reduction when the motor is stopped)	
		2	Use current control mode 2. (For noise reduction when the motor is stopped)	
		3	Use current control mode 3. (For noise reduction when the motor is operating at high speed)	
		4 Default	Use current control mode 4. (For noise reduction when the motor is stopped and operating at high speed)	

8.15.6 Current Gain Level Setting

You can set the current gain level to reduce noise by adjusting the parameter for current control inside the SERVOPACK according to the setting of Pn100 (Speed Loop Gain). The noise level can be reduced by decreasing the setting of Pn13D (Current Gain Level) from its default setting of 2000% (disabled). However, if the setting is decreased, the level of noise will be lowered, but the response characteristic of the SERVOPACK will also be reduced. Adjust the current gain level within the range that maintains the SERVOPACK response characteristic.

	Current Gain Level Speed Pos Trq			
Pn13D (213Dh)	Setting Range	Setting Unit	Default Setting	When Enabled
	100 to 2000	1%	2000	Immediately

Important

If the current gain level is changed, the response characteristic of the speed loop will also change. Servo tuning must therefore be performed again.

8.15.7 Speed Detection Method Selection

You can use the speed detection method selection to ensure smooth servomotor speed changes during operation. To ensure smooth motor speed changes during operation, set Pn009 to n.□1□□ (use speed detection 2).

With a linear servomotor, you can reduce the noise level of the running motor when the linear encoder scale pitch is large.

Pn009 (2009h)	n.□X□□	Speed Detection Method Selection (Speed Pos Trq)		When Enabled
		0 Default	Use speed detection 1.	After restart
		1	Use speed detection 2.	

Important

If the speed detection method is changed, the response characteristic of the speed loop will also change. Servo tuning must therefore be performed again.

8.15.8 Speed Feedback Filter

You can set a first order lag filter for the speed feedback in the speed loop. This ensures smooth changes in the feedback speed to reduce vibration. If a large value is set, it will increase the delay and make response slower.

Pn308 (2308h)	Speed Feedback Filter Time Constant (Speed Pos Trq)			
	Setting Range	Setting Unit	Default Setting	When Enabled
	0 to 65535	0.01 ms	0	Immediately

8.15.9 Backlash Compensation

(1) Outline

If you drive a machine that has backlash, there will be deviation between the travel distance in the position reference that is managed by the host controller and the travel distance of the actual machine. Use backlash compensation to add the backlash compensation value to the position reference and use the result to drive the servomotor. This will ensure that the travel distance of the actual machine will be the same as the travel distance in the host controller.

Note:

- This function can be used only with a rotary servomotor.
- This function can be used only for position control.
- This function is disabled while a utility function is executing. However, this function is always enabled while autotuning with a host reference is executing.

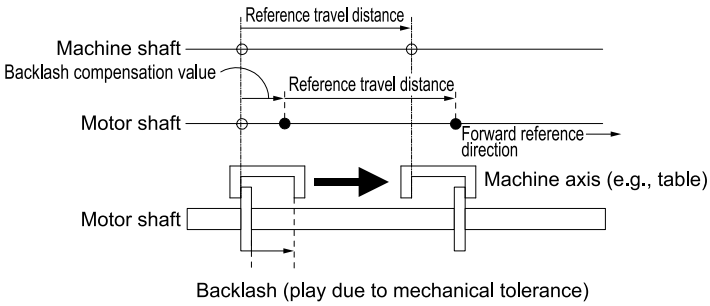

(2) Related Parameters

Set the following parameters to use backlash compensation.

(a) Backlash Compensation Direction

Set the direction in which to apply backlash compensation.

		Backlash Compensation Direction		Speed Pos Trq	When Enabled
Pn230 (2230h)	n.□□□X	0 Default	Compensate forward references.		After restart
		1	Compensate reverse references.		

(b) Backlash Compensation Value

Set the amount of backlash compensation to add to the position reference.

The amount is set in increments of 0.1 reference units. However, when the amount is converted to encoder pulses, it is rounded off at the decimal point.

Information

When Pn231 = 6553.6 [reference units] and position reference unit = 1/1: ((Position User Unit: Numerator (2701h: 1)/ Position User Unit: Denominator (2701h: 2)) = 1/1)

6553.6 × 1 = 6553.6 [pulses]

⇒ The backlash compensation will be 6553 encoder pulses.

	Backlash Compensation Value			Speed Pos Trq
Pn231 (2231h)	Setting Range	Setting Unit	Default Setting	When Enabled
	-500000 to 500000	0.1 reference unit	0	Immediately

Important

- The backlash compensation value is restricted by the following formula. Backlash compensation is not performed if this condition is not met.

$$\text{Pn231} \leq \frac{\text{Denominator}}{\text{Numerator}} \times \frac{\text{Maximum motor speed [min}^{-1}\text{]}}{60} \times \text{Encoder resolution}^{*1} \times 0.00025$$

*1 Refer to the following section for the encoder resolution.
☞ 5.14 Setting Unit Systems on page 209

Example 1:
Denominator = 1, Numerator = 4, Maximum motor speed = 7000 [min^{-1}], and Encoder resolution = 67108864 (26 bits):
1/4 × 7000/60 × 67108864 × 0.00025 = 489335.4 [reference units]
⇒ The backlash compensation will be limited to 489335.4 reference units.
Example 2:
Denominator = 1, Numerator = 1, Maximum motor speed = 7000 [min^{-1}], Pn20A (Number of External Encoder Scale Pitches) = 500, and Use of the JZDP-H00□-000 (signal resolution: 1/256):
1/1 × 7000/60 × (500 × 256) × 0.00025 = 3733.3 [reference units]
⇒ The backlash compensation will be limited to 3733.3 reference units.

- Do not exceed the upper limit of the backlash compensation value. You can check the upper limit on the operation monitor of the SigmaWin+.
- The sign for backlash compensation depends on the setting of Pn230 (Backlash Compensation Direction). Specifically, if Pn231 is set to a positive value when Pn230 is set to n.□□□1 (compensate reverse references), then backlash is compensated in the reverse direction. The relationship between each setting and the direction of backlash compensation is shown below.

Setting of Pn230	Setting of Pn231	Backlash Compensation Direction
n.□□□1 (compensate reverse references)	Positive value	Reverse
	Negative value	Forward
n.□□□0 (compensate forward references)	Positive value	Forward
	Negative value	Reverse

(c) Backlash Compensation Time Constant

You can set a time constant for a first order lag filter for the setting of Pn231 (Backlash Compensation) that is added to the position reference.

If you set Pn233 (Backlash Compensation Time Constant) to 0, the first order lag filter is disabled.

	Backlash Compensation Time Constant			Speed Pos Trq
Pn233 (2233h)	Setting Range	Setting Unit	Default Setting	When Enabled
	0 to 65535	0.01 ms	0	Immediately

Note:

Changes to the settings are applied when there is no reference pulse input and the servomotor is stopped. The current operation is not affected if the setting is changed during servomotor operation.

(3) Related Monitoring

You can monitor the following values on the operation monitor of the SigmaWin+.

Displayed Value	Unit
Current Backlash Compensation Value	0.1 reference units
Backlash Compensation Value Setting Limit	0.1 reference units

(4) Compensation Operation

This section describes the operation that is performed for backlash compensation.

Note:

The following figures are for when backlash compensation direction is set to Pn230 = n.□□□0 (compensate forward references). The following monitor information is provided in the figures: Target Position (607Ah) (target position in the reference coordinate system), Position Demand Value (6062h) (reference position in the reference coordinate system), and Position Actual Value (6064h) (feedback position in the machine coordinate system). The monitor information includes the feedback position in machine coordinate system (Position Actual Value) and other feedback information. The backlash compensation value is subtracted from the feedback positions in the monitor information, so it is not necessary for the host controller to consider the backlash compensation value.

Important

The encoder divided pulse output will output the number of encoder pulses for which driving was actually performed, including the backlash compensation value. If you use the encoder divided pulse output for position feedback at the host controller, you must consider the backlash compensation value.

(a) Operation When the Servo Is ON

Pn231 (Backlash Compensation Value) is added in the backlash compensation direction when the servo is ON (i.e., while power is supplied to the motor) and a reference is input in the same direction as Pn230 = n.□□□X (backlash compensation direction). When there is a reference input in the direction opposite to the backlash compensation direction, the backlash compensation value is not added (i.e., backlash compensation is not performed).

The relationship between Position Actual Value (6064h) and the motor shaft position is as follows:

- If a reference is input in the compensation direction: Position Actual Value (6064h) = motor shaft position - Pn231
- If a reference is input in the direction opposite to the compensation direction: Position Actual Value (6064h) = motor shaft position

The following figure shows driving the servomotor in the forward direction from Target Position (607Ah) to Target Position 1 and then to Target Position 2, and then returning from Target Position 2 to Target Position 1 and then to Target Position 0.

Backlash compensation is applied when moving from Target Position 0 to Target Position 1, but not when moving from Target Position 2 to Target Position 1.

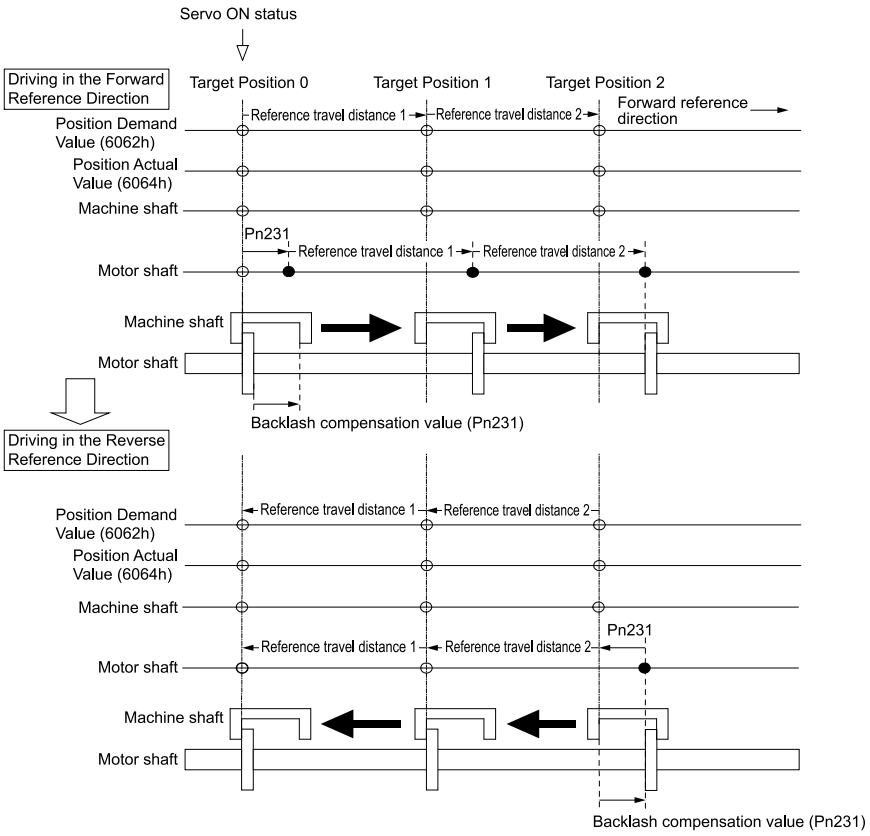

(b) Operation When the Servo Is OFF

Backlash compensation is not applied when the servo is OFF (i.e., when power is not supplied to motor). Therefore, the reference position (Position Demand Value (6062h)) is moved by only the backlash compensation value.

The relationship between Position Actual Value (6064h) and the motor shaft position is as follows:

- When servo is OFF: Position Actual Value (6064h) = servomotor shaft position

The following figure shows what happens when the servo is turned OFF after driving the servomotor in the forward direction from Target Position 0 to Target Position 1. Backlash compensation is not applied when the servo is OFF. (The SERVOPACK manages the position data so that Position Actual Value (6064h) and Position Demand Value (6062h) are the same.)

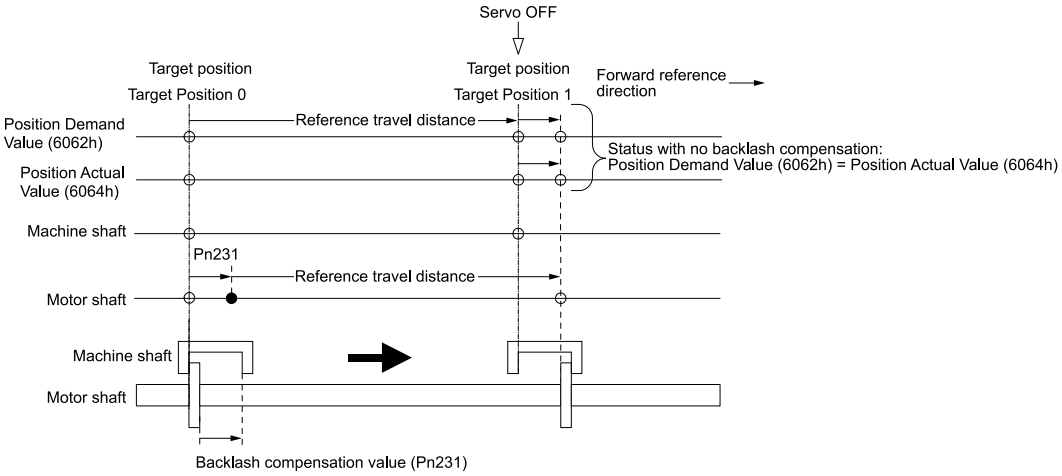

(c) Operation When There Is Overtravel

When there is overtravel (i.e., when driving is prohibited due to an overtravel signal), the operation is the same as for when the servo is OFF, i.e., backlash compensation is not applied.

Refer to the following section for information when the servo is OFF.

☞ *(b) Operation When the Servo Is OFF on page 468*

(d) Operation When Control Is Changed

Backlash compensation is performed only for position control.

Backlash compensation is not applied when position control is changed to any other control method.

Backlash compensation is applied in the same way as when the servo is ON if any other control method is changed to position control.

Refer to the following section for information on the same compensation as when the servo is ON.

☞ *(a) Operation When the Servo Is ON on page 467*

(5) Related Monitoring

You can monitor the following values on the operation monitor of the SigmaWin+.

Displayed Value	Unit	Specification
Input Reference Pulse Speed	min^{-1}	Displays the input reference pulse speed after backlash compensation.
Position Deviation	Reference units	Displays the position deviation for the position reference after backlash compensation.
Input Reference Pulse Counter	Reference units	Displays the input reference pulse counter after backlash compensation.
Feedback Pulse Counter	Encoder pulses	Displays the number of pulses from the actually driven motor encoder.
Fully-Closed Feedback Pulse Counter	External encoder resolution	Displays the number of pulses of the actually driven external encoder.
Feedback Pulse Counter	Reference units	Displays the number of pulses from the actually driven encoder in reference units.

(a) Related Monitoring Diagrams

The following symbols are used in the related monitoring diagrams.

[A]: Analog monitor

[U]: Monitor mode (Un monitor)

[E]: EtherCAT monitor information

[O]: Output signal

[T]: Trace data

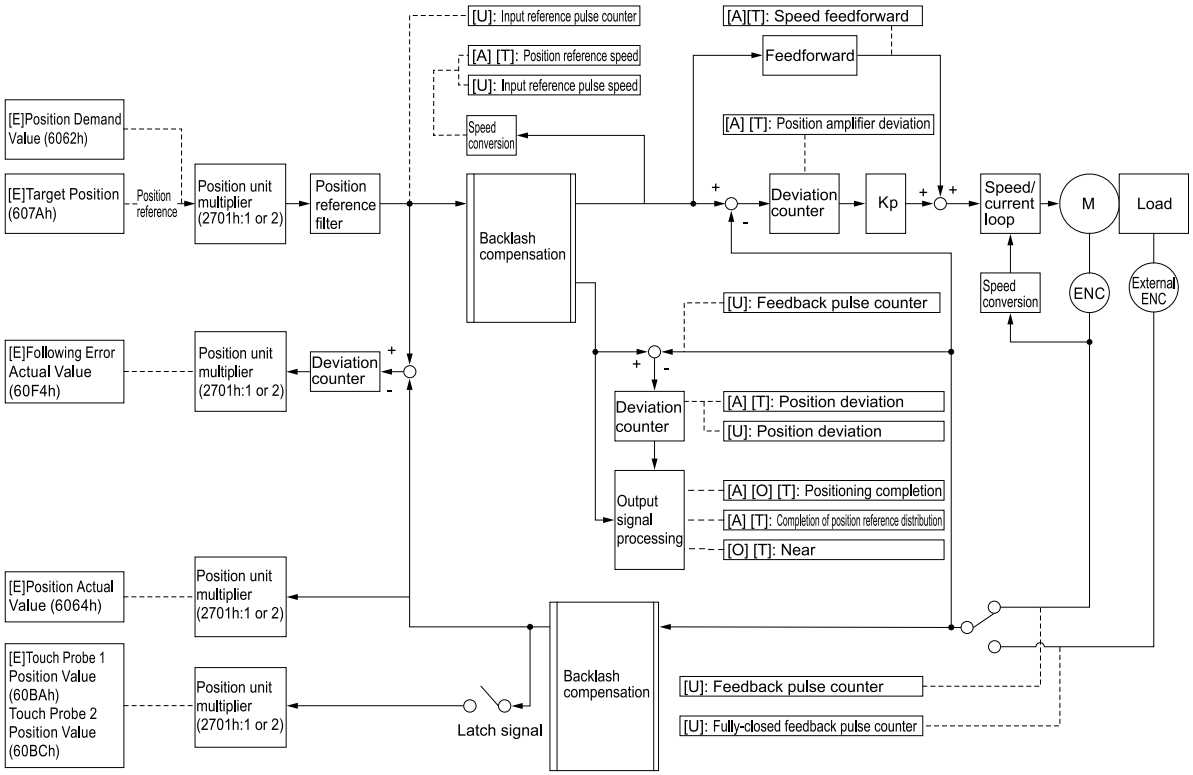
[U]: Input reference pulse counter
[A] [T]: Position reference speed
[U]: Input reference pulse speed
Speed conversion
[A][T]: Speed feedforward
Feedforward
[A] [T]: Position amplifier deviation
[E]Position Demand Value (6062h)
[E]Target Position (607Ah)
Position reference
Position unit multiplier (2701h:1 or 2)
Position reference filter
Backlash compensation
Deviation counter
Kp
Speed/ current loop
M
Load
Speed conversion
ENC
External ENC
[U]: Feedback pulse counter
[E]Following Error Actual Value (60F4h)
Position unit multiplier (2701h:1 or 2)
Deviation counter
Deviation counter
[A] [T]: Position deviation
[U]: Position deviation
Output signal processing
[A] [O] [T]: Positioning completion
[A] [T]: Completion of position reference distribution
[O] [T]: Near
[E]Position Actual Value (6064h)
Position unit multiplier (2701h:1 or 2)
[E]Touch Probe 1 Position Value (60BAh) Touch Probe 2 Position Value (60BCh)
Position unit multiplier (2701h:1 or 2)
Latch signal
Backlash compensation
[U]: Feedback pulse counter
[U]: Fully-closed feedback pulse counter

8.16 Manual Tuning

This section describes manual tuning.

8.16.1 Tuning the Servo Gains

(1) Servo Gains

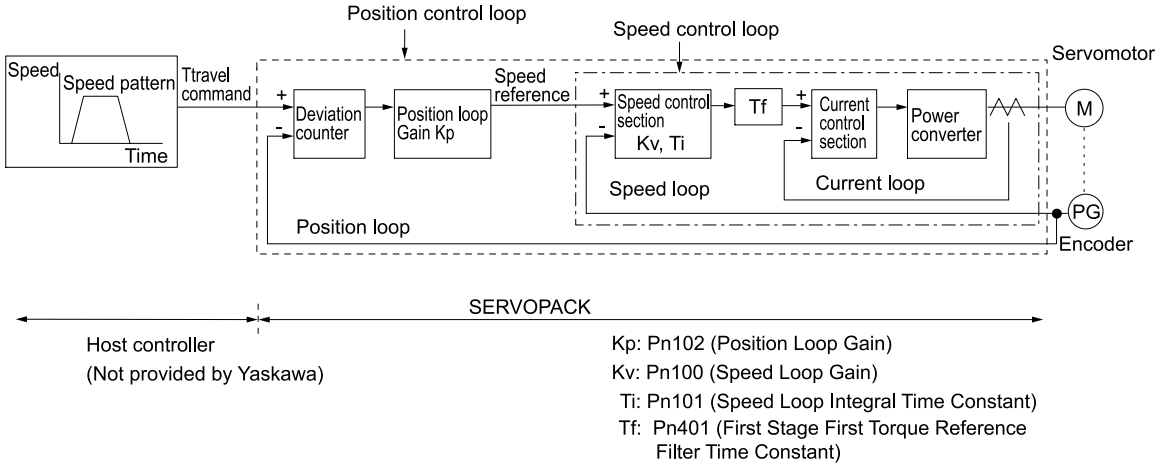

In order to manually tune the servo gains, you must understand the configuration and characteristic of the SERVOPACK and adjust the servo gains individually. In most cases, if you greatly change any one parameter, you must adjust the other parameters again. To check the response characteristic, you must prepare a measuring instrument to monitor the output waveforms from the analog monitor.

The SERVOPACK has three feedback systems (the position loop, speed loop, and current loop), and the response characteristic must be increased more with the inner loops. If this relationship is not maintained, the response characteristic will suffer and vibration will occur more easily.

A sufficient response characteristic is ensured for the current loop. There is never a need for it to be adjusted by the user.

(2) Outline

You can use manual tuning to set the servo gains in the SERVOPACK to increase the response characteristic of the SERVOPACK. For example, you can reduce the positioning time for position control.

Use manual tuning in the following cases.

- When tuning with autotuning without a host reference or autotuning with a host reference does not achieve the desired results
- When you want to increase the servo gains higher than the gains that resulted from autotuning without a host reference or autotuning with a host reference
- When you want to determine the servo gains and moment of inertia ratio yourself

You start manual tuning either from the default parameter settings or from the gain settings that resulted from autotuning without a host reference or autotuning with a host reference.

(3) Applicable Tools

You can monitor the servo gains with the SigmaWin+ or with the analog monitor.

(4) Precautions

Vibration may occur while you are tuning the servo gains. We recommend that you set Pn310 to n.□□□2 (output an alarm (A.520) if vibration is detected). Refer to the following section for information on vibration detection.

☞ *6.11 Vibration Detection Level Initialization on page 276*

Vibration alarms are not detected for all vibration. Also, an emergency stop method is necessary to stop the machine safely when an alarm occurs. You must provide an emergency stop device and activate it immediately whenever vibration occurs.

(5) Tuning Procedure Example (for Position Control or Speed Control)

Step	Description
1	Adjust the setting of Pn401 (First Stage First Torque Reference Filter Time Constant) so that vibration does not occur.
2	Increase the setting of Pn100 (Speed Loop Gain) and reduce the setting of Pn101 (Speed Loop Integral Time Constant) as far as possible within the range that does not cause machine vibration.
3	Repeat steps 1 and 2 and return the settings about 10% to 20% from the values that you set.
4	For position control, increase the setting of Pn102 (Position Loop Gain) within the range that does not cause vibration.

Information

If you greatly change any one servo gain parameter, you must adjust the other parameters again. Do not increase the setting of just one parameter. As a guideline, adjust the settings of the servo gains by approximately 5% each. As a rule, change the servo parameters in the following order.

- To Increase the Response Speed
  1. Reduce the torque reference filter time constant.
  2. Increase the speed loop gain.
  3. Decrease the speed loop integral time constant.
  4. Increase the position loop gain.
- To Reduce Response Speed and to Stop Vibration and Overshooting
  1. Reduce the position loop gain.
  2. Increase the speed loop integral time constant.
  3. Decrease the speed loop gain.
  4. Increase the torque filter time constant.

(6) Adjusted Servo Gains

You can set the following gains to adjust the response characteristic of the SERVOPACK.

Parameter No.	Name	Reference
Pn100	Speed Loop Gain	☞ *(b) Speed Loop Gain on page 473*
Pn101	Speed Loop Integral Time Constant	☞ *(c) Speed Loop Integral Time Constant on page 473*
Pn102	Position Loop Gain	☞ *(a) Position Loop Gain on page 472*
Pn401	First Stage First Torque Reference Filter Time Constant	☞ *(d) Torque Reference Filter on page 473*

(a) Position Loop Gain

The position loop gain determines the response characteristic of the position loop in the SERVOPACK. If you can increase the setting of the position loop gain, the response characteristic will improve and the positioning time will be shortened. However, you normally cannot increase the position loop gain higher than the inherit vibration frequency of the machine system. Therefore, to increase the setting of the position loop gain, you must increase the rigidity of the machine to increase the inherit vibration frequency of the machine.

Pn102 (2102h)	Position Loop Gain			Speed / **Pos** / Trq
	Setting Range	Setting Unit	Default Setting	When Enabled
	10 to 20000	0.1/s	400	Immediately

Information

For machines for which Pn102 (Position Loop Gain) cannot be set to a high value, the A.d00 alarm (Position Deviation Overflow) may occur during high-speed operation. If that is the case, you can increase the setting of the following parameter to increase the level for alarm detection.

Use the following condition as a guideline for determining the setting.

$$Pn520 \geq \frac{\text{Maximum feed speed [reference units/s]}}{Pn102 \div 10\ (1/s)} \times 2.0$$

If you use a position reference filter, transient deviation will increase due to the filter time constant. When you make the setting, consider deviation accumulation that may result from the filter.

Pn520 (2520h)	Position Deviation Overflow Alarm Level			Speed Pos Trq
	Setting Range	Setting Unit	Default Setting	When Enabled
	1 to 1073741823	1 reference unit	6116694	Immediately

(b) Speed Loop Gain

This parameter determines the response characteristic of the speed loop. If the response characteristic of the speed loop is low, it becomes a delay factor for the position loop located outside of the speed loop. This will result in overshooting and vibration in the speed reference. Therefore, setting the speed loop gain as high as possible within the range that will not cause the machine system to vibrate will produce a stable servo system with a good response characteristic.

Pn100 (2100h)	Speed Loop Gain			Speed Pos Trq
	Setting Range	Setting Unit	Default Setting	When Enabled
	10 to 20000	0.1 Hz	400	Immediately

$$\text{Setting of Pn103} = \frac{\text{Load moment of inertia at motor shaft } (J_L)}{\text{Servomotor moment of inertia } (L_M)} \times 100\ (\%)$$

The default setting of Pn103 (Moment of Inertia Ratio) is 100. Before you tune the servo, calculate the moment of inertia ratio with the above formula and set Pn103 to the calculation result.

Pn103 (2103h)	Moment of Inertia Ratio			Speed Pos Trq
	Setting Range	Setting Unit	Default Setting	When Enabled
	0 to 65535	1%	100	Immediately

(c) Speed Loop Integral Time Constant

To enable response to even small inputs, the speed loop has an integral element. The integral element becomes a delay factor in the servo system. If the time constant is set too high, overshooting will occur, positioning settling time will increase, and the response characteristic will suffer.

Pn101 (2101h)	Speed Loop Integral Time Constant			Speed Pos Trq
	Setting Range	Setting Unit	Default Setting	When Enabled
	15 to 51200	0.01 ms	2000	Immediately

(d) Torque Reference Filter

As shown in the following diagram, the torque reference filter contains a first order lag filter and notch filters arranged in series, and each filter operates independently.

The notch filters can be enabled and disabled with Pn408 = n.□X□X and Pn416 = n.□XXX.

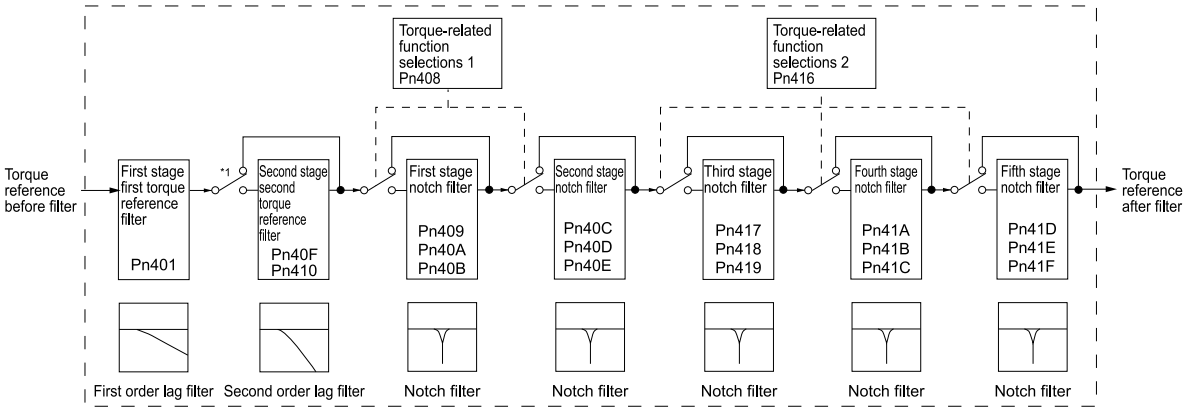

*1 The second stage second torque reference filter is disabled when Pn40F is set to 5000 (default setting) and it is enabled when Pn40F is set to a value lower than 5000.

◆ Torque Reference Filter

If you suspect that machine vibration is being caused by the servo drive, try adjusting the torque reference filter time constant. This may stop the vibration. The lower the value, the better the control response characteristic will be, but there may be a limit depending on the machine conditions.

Pn401 (2401h)	First Stage First Torque Reference Filter Time Constant			Speed Pos Trq
	Setting Range	Setting Unit	Default Setting	When Enabled
	0 to 65535	0.01 ms	100	Immediately
Pn40F (240Fh)	Second Stage Second Torque Reference Filter Frequency			Speed Pos Trq
	Setting Range	Setting Unit	Default Setting	When Enabled
	100 to 5000	1 Hz	5000	Immediately
Pn410 (2410h)	Second Stage Second Torque Reference Filter Q Value			Speed Pos Trq
	Setting Range	Setting Unit	Default Setting	When Enabled
	50 to 100	0.01	50	Immediately

Note:

The filter is disabled if you set Pn40F to 5000.

◆ Notch Filters

The notch filter can eliminate specific frequency elements generated by the vibration of sources such as resonance of the shaft of a ball screw.

The notch filter puts a notch in the gain curve at the specific vibration frequency (called the notch frequency). The frequency components near the notch frequency can be reduced or removed with a notch filter.

Notch filters are set with three parameters for the notch filter frequency, notch filter Q value, and notch filter depth. This section describes the notch filter Q value and notch filter depth.

◆ Notch filter Q Value

The setting of the notch filter Q value determines the width of the frequencies that are filtered for the notch filter frequency. The width of frequencies (width of the notch) changes with the notch filter Q value. The larger the notch filter Q value is, the narrower the width of frequencies that are filtered is (the steeper the notch is).

The notch filter frequency characteristics for different notch filter Q values are shown below.

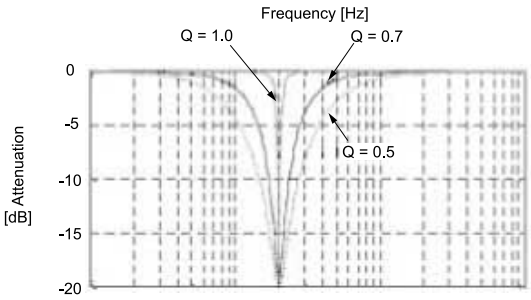

Note:

The above notch filter frequency characteristics are based on calculated values and may be different from actual characteristics.

◆ Notch Filter Depth

The setting of the notch filter depth determines the depth of the frequencies that are filtered for the notch filter frequency. The depth of the notch changes with the notch filter depth. The smaller the notch filter depth is, the deeper the notch is, increasing the effect of vibration suppression. However, if the value is too small, vibration can actually increase.

The notch filter is disabled if the notch filter depth, d, is set to 1.0 (i.e., if Pn419 is set to 1000).

The notch filter frequency characteristics for different notch filter depths are shown below.

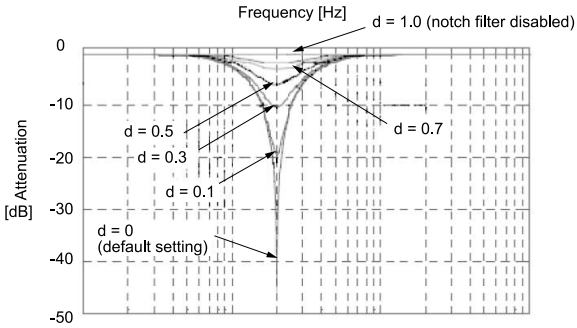

Note:

The above notch filter frequency characteristics are based on calculated values and may be different from actual characteristics.

You can enable or disable the notch filter with Pn408 and Pn416.

Pn408 (2408h)	n.□□□X	Notch Filter Selection 1 Speed Pos Trq		When Enabled
		0 Default	Disable first stage notch filter.	Immediately
		1	Enable first stage notch filter.	
Pn408 (2408h)	n.□X□□	Notch Filter Selection 2 Speed Pos Trq		When Enabled
		0 Default	Disable second stage notch filter.	Immediately
		1	Enable second stage notch filter.	
Pn416 (2416h)	n.□□□X	Notch Filter Selection 3 Speed Pos Trq		When Enabled
		0 Default	Disable third stage notch filter.	Immediately
		1	Enable third stage notch filter.	
Pn416 (2416h)	n.□□X□	Notch Filter Selection 4 Speed Pos Trq		When Enabled
		0 Default	Disable fourth stage notch filter.	Immediately
		1	Enable fourth stage notch filter.	
Pn416 (2416h)	n.□X□□	Notch Filter Selection 5 Speed Pos Trq		When Enabled
		0 Default	Disable fifth stage notch filter.	Immediately
		1	Enable fifth stage notch filter.	

Set the machine vibration frequencies in the notch filter parameters.

Pn409 (2409h)	First Stage Notch Filter Frequency			Speed Pos Trq
	Setting Range	Setting Unit	Default Setting	When Enabled
	10 to 5000	1 Hz	5000	Immediately
Pn40A (240Ah)	First Stage Notch Filter Q Value			Speed Pos Trq
	Setting Range	Setting Unit	Default Setting	When Enabled
	50 to 1000	0.01	70	Immediately
Pn40B (240Bh)	First Stage Notch Filter Depth			Speed Pos Trq
	Setting Range	Setting Unit	Default Setting	When Enabled
	0 to 1000	0.001	0	Immediately
Pn40C (240Ch)	Second Stage Notch Filter Frequency			Speed Pos Trq
	Setting Range	Setting Unit	Default Setting	When Enabled
	10 to 5000	1 Hz	5000	Immediately
Pn40D (240Dh)	Second Stage Notch Filter Q Value			Speed Pos Trq
	Setting Range	Setting Unit	Default Setting	When Enabled
	50 to 1000	0.01	70	Immediately
Pn40E (240Eh)	Second Stage Notch Filter Depth			Speed Pos Trq
	Setting Range	Setting Unit	Default Setting	When Enabled
	0 to 1000	0.001	0	Immediately
Pn417 (2417h)	Third Stage Notch Filter Frequency			Speed Pos Trq
	Setting Range	Setting Unit	Default Setting	When Enabled
	10 to 5000	1 Hz	5000	Immediately
Pn418 (2418h)	Third Stage Notch Filter Q Value			Speed Pos Trq
	Setting Range	Setting Unit	Default Setting	When Enabled
	50 to 1000	0.01	70	Immediately
Pn419 (2419h)	Third Stage Notch Filter Depth			Speed Pos Trq
	Setting Range	Setting Unit	Default Setting	When Enabled
	0 to 1000	0.001	0	Immediately
Pn41A (241Ah)	Fourth Stage Notch Filter Frequency			Speed Pos Trq
	Setting Range	Setting Unit	Default Setting	When Enabled
	10 to 5000	1 Hz	5000	Immediately
Pn41B (241Bh)	Fourth Stage Notch Filter Q Value			Speed Pos Trq
	Setting Range	Setting Unit	Default Setting	When Enabled
	50 to 1000	0.01	70	Immediately
Pn41C (241Ch)	Fourth Stage Notch Filter Depth			Speed Pos Trq
	Setting Range	Setting Unit	Default Setting	When Enabled
	0 to 1000	0.001	0	Immediately
Pn41D (241Dh)	Fifth Stage Notch Filter Frequency			Speed Pos Trq
	Setting Range	Setting Unit	Default Setting	When Enabled
	10 to 5000	1 Hz	5000	Immediately
Pn41E (241Eh)	Fifth Stage Notch Filter Q Value			Speed Pos Trq
	Setting Range	Setting Unit	Default Setting	When Enabled
	50 to 1000	0.01	70	Immediately

Continued on next page.

Continued from previous page.

Pn41F (241Fh)	Fifth Stage Notch Filter Depth			Speed Pos Trq
	Setting Range	Setting Unit	Default Setting	When Enabled
	0 to 1000	0.001	0	Immediately

Important

- Do not set Pn409, Pn40C, Pn417, Pn41A, and Pn41D (notch filter frequencies) that are close to the speed loop's response frequency. Set a frequency that is at least four times the setting of Pn100 (Speed Loop Gain). (However, Pn103 (Moment of Inertia Ratio) must be set correctly.) If the setting is not correct, vibration may occur and the machine may be damaged.
- Change the settings of Pn409, Pn40C, Pn417, Pn41A, and Pn41D (notch filter frequencies) only while the servomotor is stopped. Vibration may occur if a notch filter frequency is changed during operation.

(7) Guidelines for Manually Tuning Servo Gains

When you manually adjust the parameters, make sure that you completely understand the information in the product manual and use the following conditional expressions as guidelines. The appropriate values of the parameter settings are influenced by the machine specifications, so they cannot be determined universally. When you adjust the parameters, actually operate the machine and use the SigmaWin+ or analog monitor to monitor operating conditions. Even if the status is stable while the motor is stopped, an unstable condition may occur when an operation reference is input. Therefore, input operation references and adjust the servo gains as you operate the servomotor.

Adjustment Value for Manual Tuning	Description
Stable Value	Settings that provide a good balance between parameters. However, if the load moment of inertia is large and the machine system contains elements prone to vibration, you must sometimes use a setting that is somewhat higher to prevent the machine from vibrating.
Critical Value	Settings for which the parameters affect each other Depending on the machine conditions, overshooting and vibration may occur and operation may not be stable. If the critical gain condition expressions are not met, operation will become more unstable, and there is a risk of abnormal motor shaft vibration and round-trip operation with a large amplitude. Always stay within the critical gain conditions. If you use the torque reference filter, second torque reference filter, and notch filters together, the interference between the filters and the speed loop gain will be superimposed. Allow leeway in the adjustments.

Important

The following adjusted value guidelines require that the setting of Pn103 (Moment of Inertia Ratio) is correctly set for the actual machine.

Term

P control :

Proportional control.

PI control :

Proportional - integral control.

I-P control :

Proportional - integral control in which the proportional operation works for the controlled variable only and the integral operation works for the control deviation only.

Information

Selecting the Speed Loop Control Method (PI Control or I-P Control)

Usually, I-P control is effective for high-speed positioning and high-speed, high-precision processing applications. With I-P control, you can use a lower position loop gain than for PI control to reduce the positioning time and reduce arc radius reduction. However, if you can use mode switching to change to proportional control to achieve the desired application, then using PI control would be the normal choice.

(a) When Pn10B = n.□□0□ (PI Control)

Guidelines are given below for gain 1.

The same guidelines apply to gain 2 (Pn104, Pn105, Pn106, and Pn412), gain 3 (Pn12B, Pn12C, Pn12D, and Pn413), and gain 4 (Pn12E, Pn12F, Pn130, and Pn414).

- Pn100 (Speed Loop Gain) [Hz] and Pn102 (Position Loop Gain) [/s]
  Stable gain: Pn102 [/s] ≤ 2π × Pn100/4 [Hz]
  Critical gain: Pn102 [/s] < 2π × Pn100 [Hz]

- Pn100 (Speed Loop Gain) [Hz] and Pn101 (Speed Loop Integral Time Constant) [ms]
  Stable gain: Pn101 [ms] ≥ 4000/(2π × Pn100 [Hz])
  Critical gain: Pn101 [ms] > 1000/(2π × Pn100 [Hz])
- Pn100 (Speed Loop Gain) [Hz] and Pn401 (First Stage First Torque Reference Filter Time Constant) [ms]
  Stable gain: Pn401 [ms] ≤ 1000/(2π × Pn100 [Hz] × 4)
  Critical gain: Pn401 [ms] < 1000/(2π × Pn100 [Hz] × 1)
- Pn100 (Speed Loop Gain) [Hz] and Pn40F (Second Stage Second Torque Reference Filter Frequency) [Hz]
  Critical gain: Pn40F [Hz] > 4 × Pn100 [Hz]

  Note:

  Set Pn410 (Second Stage Second Torque Reference Filter Q Value) to 0.70.
- Pn100 (Speed Loop Gain) [Hz] and Pn409 (First Stage Notch Filter Frequency) [Hz] (or Pn40C (Second Stage Notch Filter Frequency) [Hz])
  Critical gain: Pn409 [Hz] > 4 × Pn100 [Hz]
- Pn100 (Speed Loop Gain) [Hz] and Pn308 (Speed Feedback Filter Time Constant) [ms]
  Stable gain: Pn308 [ms] ≤ 1000/(2π × Pn100 [Hz] × 4)
  Critical gain: Pn308 [ms] < 1000/(2π × Pn100 [Hz] × 1)

(b) When Pn10B = n.□□1□ (I-P Control)

Guidelines are given below for gain 1.

The same guidelines apply to gain 2 (Pn104, Pn105, Pn106, and Pn412), gain 3 (Pn12B, Pn12C, Pn12D, and Pn413), and gain 4 (Pn12E, Pn12F, Pn130, and Pn414).

For I-P control, the relationships between the speed loop integral time constant, speed loop gain, and position loop gain are different from the relationships for PI control. The relationship between other servo gains is the same as for PI control.

- Pn100 (Speed Loop Gain) [Hz] and Pn101 (Speed Loop Integral Time Constant) [ms]
  Stable gain: Pn100 [Hz] ≥ 320/Pn101 [ms]
- Pn102 (Position Loop Gain) [/s] and Pn101 (Speed Loop Integral Time Constant) [ms]
  Stable gain: Pn102 [/s] ≤ 320/Pn101 [ms]

(c) Decimal Points in Parameter Settings

For the SERVOPACKs, decimal places are given for the settings of parameters on the digital operator, panel operator, and in the manual. For example with Pn100 (Speed Loop Gain), Pn100 = 40.0 is used to indicate a setting of 40.0 Hz. In the following adjusted value guidelines, the decimal places are also given.

Information

Pn100 (Speed Loop Gain) [Hz] and Pn101 (Speed Loop Integral Time Constant) [ms]

Stable gain: Pn101 [ms] ≥ 4000/(2π × Pn100 [Hz])

If Pn100 = 40.0 [Hz], then Pn101 = 4000/(2π × 40.0) ≈ 15.92 [ms].

(8) Model Following Control

You can use model following control to improve response characteristic and shorten positioning time. You can use model following control only with position control.

Normally, the parameters that are used for model following control are automatically set along with the servo gains by executing autotuning or custom tuning. However, you must adjust them manually in the following cases.

- When the tuning results for autotuning or custom tuning are not acceptable
- When you want to increase the response characteristic higher than that achieved by the tuning results for autotuning or custom tuning
- When you want to determine the servo gains and model following control parameters yourself

The block diagram for model following control is provided below.

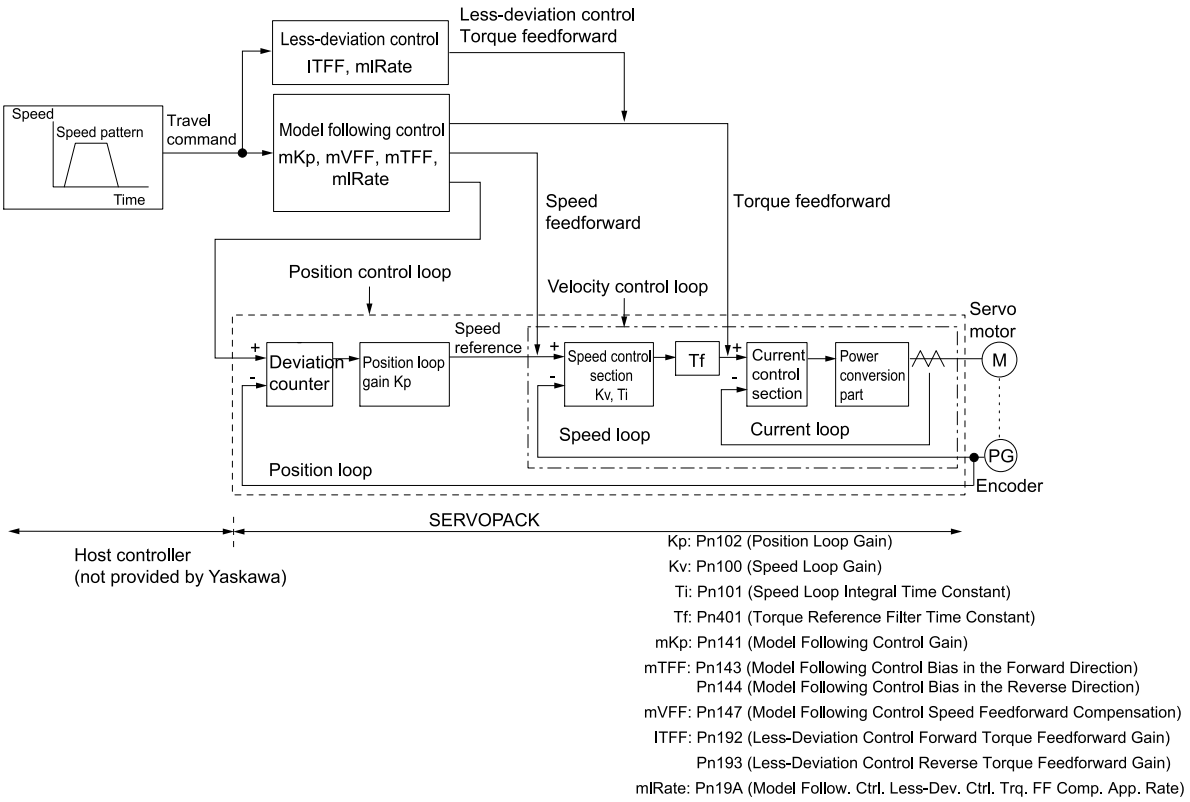

(a) Manual Tuning Procedure

Use the following tuning procedure for using model following control.

Step	Description
1	Friction compensation must also be used. Set the friction compensation parameters. Refer to the following section for the setting procedure. ☞ *8.15.2 Friction Compensation on page 460*
2	Adjust the servo gains. Refer to the following section for an example procedure. ☞ *(5) Tuning Procedure Example (for Position Control or Speed Control) on page 472* **Note:** 1. Set Pn103 (Moment of Inertia Ratio) as accurately as possible. 2. Refer to the guidelines for manually tuning the servo gains and set a stable value to Pn102 (Position Loop Gain). ☞ *(7) Guidelines for Manually Tuning Servo Gains on page 477*
3	Increase the setting of Pn141 (Model Following Control Gain) as much as possible within the range in which overshooting and vibration do not occur.
4	If overshooting occurs or if the response is different for forward and reverse operation, fine-tune model following control with the following settings: Pn143 (Model Following Control Bias in the Forward Direction), Pn144 (Model Following Control Bias in the Reverse Direction), and Pn147 (Model Following Control Speed Feedforward Compensation).

(b) Related Parameters

Next we will describe the following parameters that are used for model following control.

- Pn140 (Model Following Control-Related Selections)
- Pn141 (Model Following Control Gain)
- Pn143 (Model Following Control Bias in the Forward Direction)
- Pn144 (Model Following Control Bias in the Reverse Direction)
- Pn147 (Model Following Control Speed Feedforward Compensation)

◆ Model Following Control-Related Selections

Set Pn140 = n.□□□X to specify whether to use model following control.

If you use model following control with vibration suppression, set Pn140 to n.□□1□ or Pn140 = n.□□2□. When you also perform vibration suppression, adjust vibration suppression with custom tuning in advance.

Note:

If you set Pn140 to n.□□1□ or n.□□2□ (use vibration suppression), always set Pn140 to n.□□□1 (use model following control).

Pn140 (2140h)	n.□□□X	Model Following Control Selection (Speed / **Pos** / Trq)		When Enabled
		0 Default	Do not use model following control.	Immediately
		1	Use model following control.	
Pn140 (2140h)	n.□□X□	Vibration Suppression Selection (Speed / **Pos** / Trq)		When Enabled
		0 Default	Do not perform vibration suppression.	Immediately
		1	Perform vibration suppression for a specific frequency.	
		2	Perform vibration suppression for two specific frequencies.	

◆ Model Following Control Gain

The model following control gain determines the response characteristic of the servo system. If you increase the setting of the model following control gain, the response characteristic will improve and the positioning time will be shortened. The response characteristic of the servo system is determined by this parameter, and not by Pn102 (Position Loop Gain).

Pn141 (2141h)	Model Following Control Gain (Speed / **Pos** / Trq)			
	Setting Range	Setting Unit	Default Setting	When Enabled
	10 to 20000	0.1/s	500	Immediately

Information

For machines for which a high model following control gain cannot be set, the size of the position deviation in model following control will be determined by the setting of the model following control gain. For a machine with low rigidity, in which a high model following control gain cannot be set, position deviation overflow alarms may occur during high-speed operation. If that is the case, you can increase the setting of the following parameter to increase the level for alarm detection.

Use the following conditional expression for reference in determining the setting.

$$\text{Pn520} \geq \frac{\text{Maximum feed speed [reference units/s]}}{\text{Pn141/10 [1/s]}} \times 2.0$$

Pn520 (2520h)	Position Deviation Overflow Alarm Level (Speed / **Pos** / Trq)			
	Setting Range	Setting Unit	Default Setting	When Enabled
	1 to 1073741823	1 reference unit	6116694	Immediately

◆ Model Following Control Bias in the Forward Direction and Model Following Control Bias in the Reverse Direction

If the response is different for forward and reverse operation, use the following parameters for fine-tuning.

If you decrease the settings, the response characteristic will be lowered but overshooting will be less likely to occur.

Pn143 (2143h)	Model Following Control Bias in the Forward Direction (Speed / **Pos** / Trq)			
	Setting Range	Setting Unit	Default Setting	When Enabled
	0 to 10000	0.1%	1000	Immediately
Pn144 (2144h)	Model Following Control Bias in the Reverse Direction (Speed / **Pos** / Trq)			
	Setting Range	Setting Unit	Default Setting	When Enabled
	0 to 10000	0.1%	1000	Immediately

◆ Model Following Control Speed Feedforward Compensation

If overshooting occurs even after you adjust the model following control gain, model following control bias in the forward direction, and model following control bias in the reverse direction, you may be able to improve performance by setting the following parameter.

If you decrease the settings, the response characteristic will be lowered but overshooting will be less likely to occur.

Pn147 (2147h)	Model Following Control Speed Feedforward Compensation			Speed Pos Trq
	Setting Range	Setting Unit	Default Setting	When Enabled
	0 to 10000	0.1%	1000	Immediately

◆ Model Following Control Type Selection

When you enable model following control, you can select the model following control type. Normally, set Pn14F to n.□□□0 (use overshoot control type for model following control.model) (default setting). To further increase responsiveness, set Pn14F to n.□□□1 (response emphasis type for model following control).

Pn14F (214Fh)	n.□□□X	Model Following Control Type Selection (Speed Pos Trq)		When Enabled
		0 Default	Use overshoot control type for model following control.	After restart
		1	Use response emphasis type for model following control.	

(c) Model Following Control Less-Deviation Control Torque FF Compensation Application Rate

If overshooting occurs when using the model following control gain with less-deviation control function, you may be able to improve performance by setting the following parameter. When model following control is enabled, set Pn19A (Model Follow. Ctrl. Less-Dev. Ctrl. Trq. FF Comp. App. Rate).

Pn19A (219Ah)	Model Follow. Ctrl. Less-Dev. Ctrl. Trq. FF Comp. App. Rate			Speed Pos Trq
	Setting Range	Setting Unit	Default Setting	When Enabled
	0 to 100	0.1%	0	Immediately

◆ Tuning Flow

The basic tuning procedure is shown in the following flowchart.

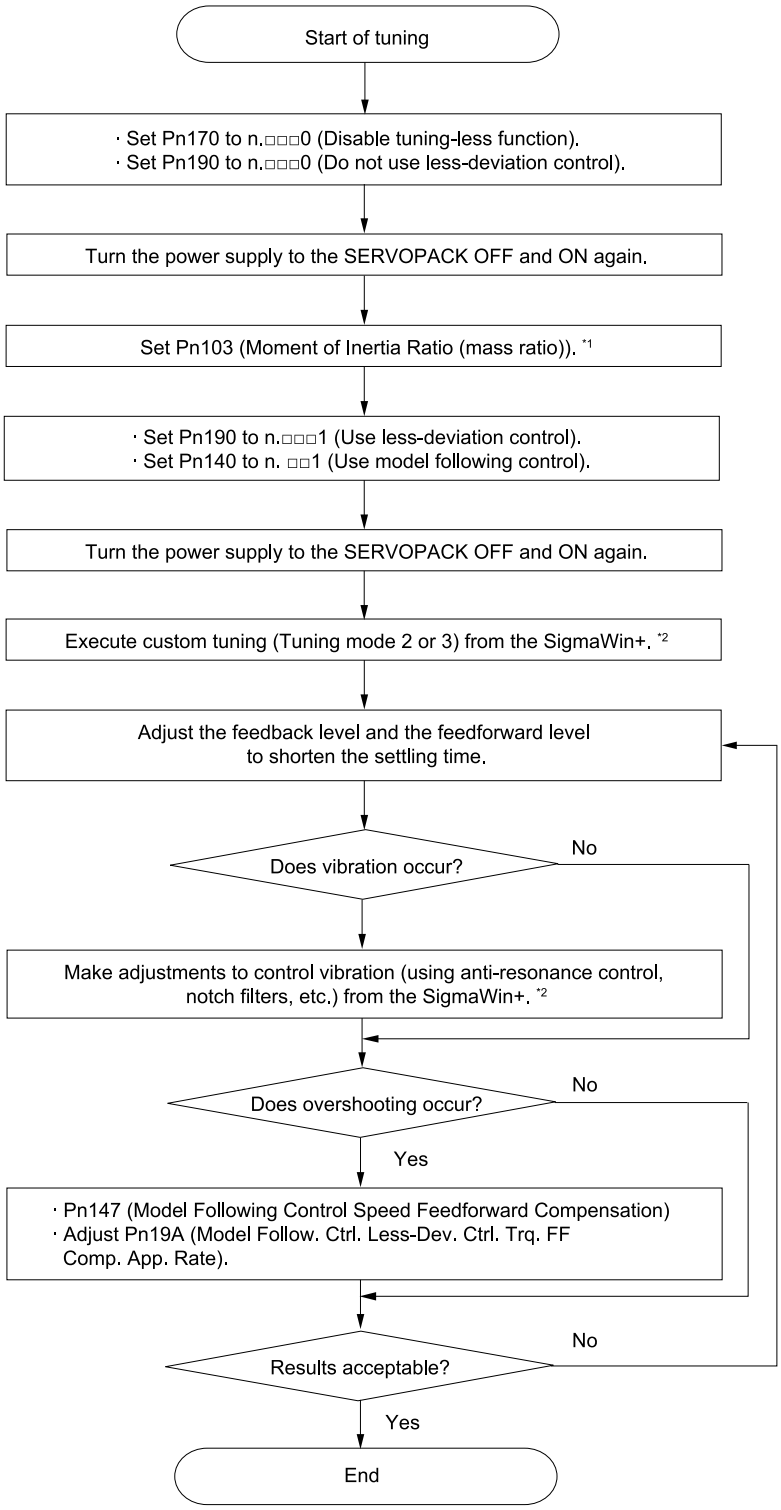

*1 Use one of the following calculation methods.

- Calculate the value manually.
- Use the following SigmaWin+ function: Moment of Inertia Estimation.

*2 For details, refer to the following section.
☞ *8.9 Custom Tuning on page 402*

(9) Low-Frequency Control Function

The low-frequency control function effectively suppresses vibrations from 1 Hz to 100 Hz that occur during operations such as positioning. This function can be combined with notch filters, anti-resonance control adjustment, model following control and friction compensation.

Low-frequency control function is available in the two types shown below.

- Convergence high speed type: Speeds up convergence of vibrations that occur during operations.

- Amplitude reduction type: Reduces the amplitude of vibrations that occur during operations.

Information This function is available in SERVOPACK software version 000F or later.

(a) Application Restrictions

The restrictions for low-frequency control function are given below.

- This function cannot be combined with the tuning-less function, the load fluctuation compensation control and the fully-closed loop control.
- It cannot be used in the following cases.
  - During torque control
  - During execution of mechanical analysis function
  - During execution of moment of inertia estimation function

(b) Preparations

Always check the following before you execute the low-frequency control function.

- Pn170 must be set to n.□□□0 (disable Tuning-less Selection).
- Pn173 must be set to n.□□□0 (do not use the Load Fluctuation Compensation Control Selection).
- The control method must not be set to torque control.
- The parameters must not be write prohibited.

(c) Low-Frequency Control Function Type Selection

◆ Convergence High Speed Type

Speeds up convergence of vibrations that occur during operations. This is effective for mechanisms with a small amount of friction, and it suppresses vibrations on both the servomotor and the load side.

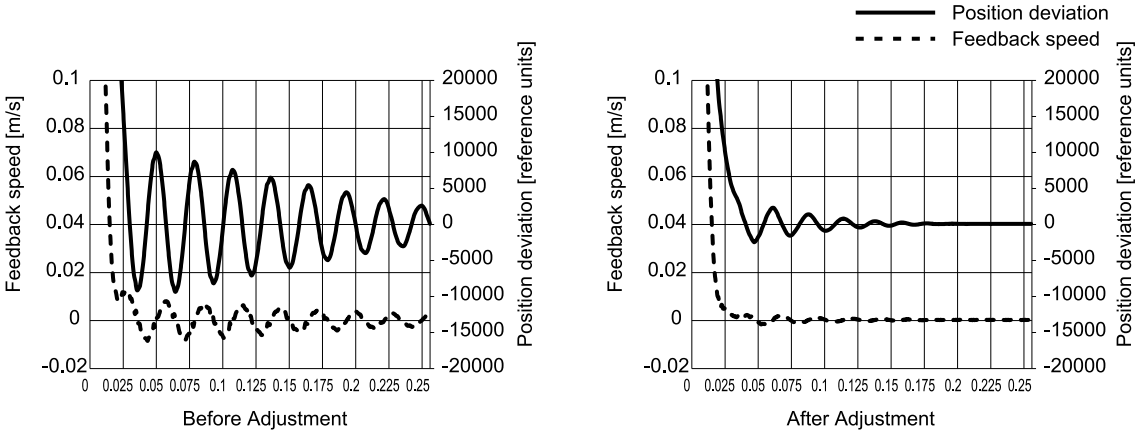

◆ Amplitude Reduction Type

Reduces the amplitude of vibrations that occur during operations. While this suppresses vibrations on the servomotor side, it will not reduce them on the load side.

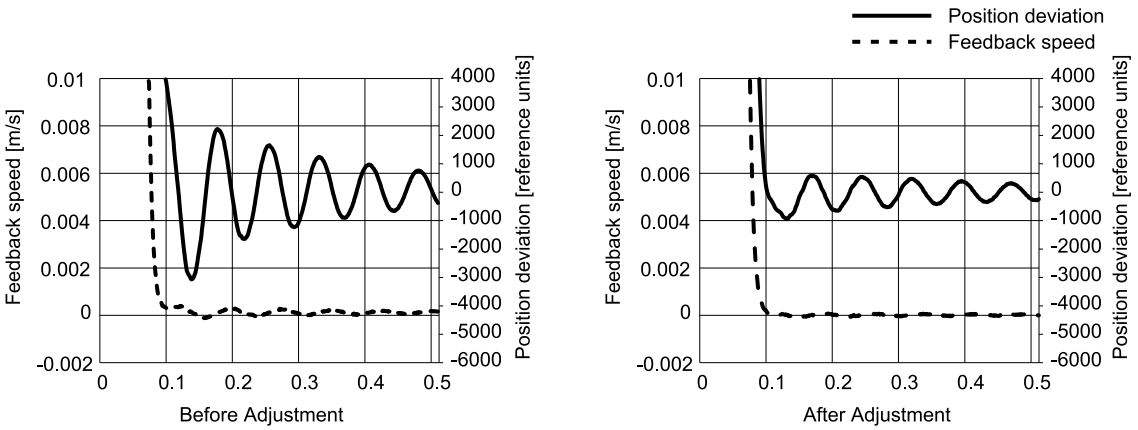

(d) Tuning Procedure

The basic tuning procedure is shown in the following flowchart. Make suitable adjustments considering the conditions and operating requirements of your machine. Raise by 10% at a time as a standard for gain tuning, and once you start to see the effect of vibration control, adjust by raising it 5% at a time.

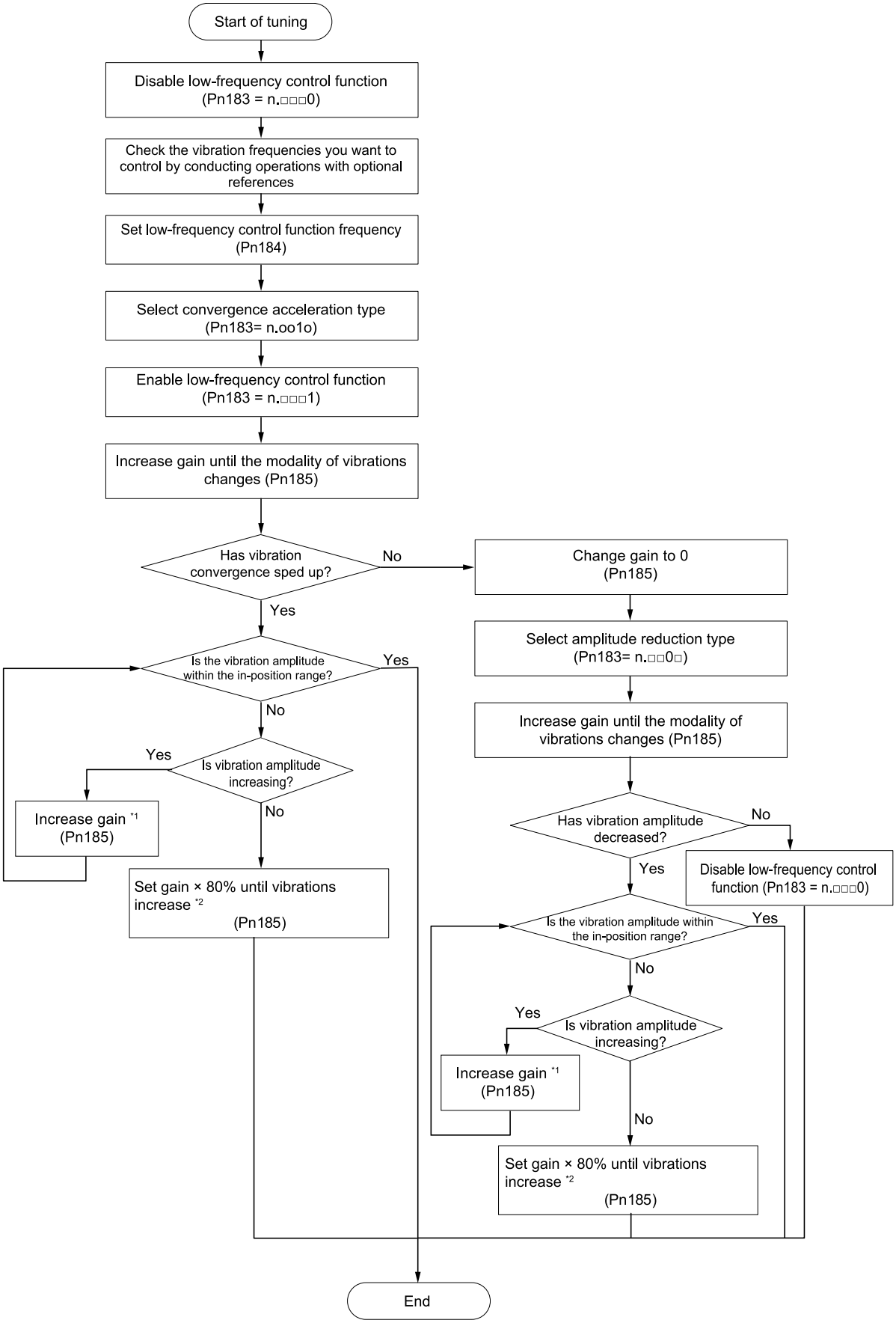

*1 If vibration cannot be suitably controlled even though the gain has been adjusted, adjust the Pn186 (low-frequency control function filter correction). In the trace function, confirm the low-frequency control compensation torque and the torque reference, and make the following adjustments depending on the type.

- Convergence high speed type: Adjust the phase of the compensation torque's vibration frequency component so it progresses 90° in regard to the disturbance estimation value.
- Amplitude reduction type: Adjust the phase of the compensation torque's vibration frequency component so it is in phase in regard to the disturbance estimation value.

*2 If the residual vibration is not within allowances, set a value that is the setting gain multiplied by 0.8 and finish adjustments.

(e) Related Parameters

The following table lists the parameters that you can use with the low-frequency control function.

		Low-Frequency Control Selections (Speed / Pos / Trq)		When Enabled
Pn183 (2183h)	n.□□□X	0 Default	Do not use low-frequency control.	Immediately
		1	Use low-frequency control.	
		Low-Frequency Control Type Selection (Speed / Pos / Trq)		**When Enabled**
Pn183 (2183h)	n.□□X□	0	Use amplitude reduction type.	Immediately
		1 Default	Use convergence acceleration type.	

Pn184 (2184h)	Low-Frequency Control Frequency (Speed / Pos / Trq)			
	Setting Range	Setting Unit	Default Setting	When Enabled
	1.0 to 100.0	0.1 Hz	10.0	Immediately

By adjusting the gain, you can reduce the amplitude of vibrations or increase the speed of convergence. If the gain is set too high, convergence may slow and amplitude or overshooting may increase.

Pn185 (2185h)	Low-Frequency Control Gain (Speed / Pos / Trq)			
	Setting Range	Setting Unit	Default Setting	When Enabled
	-300.0 to 300.0	0.1%	0.0	Immediately

If vibration cannot be suitably controlled even though the gain has been adjusted, you may be able to improve performance by setting the following parameters.

Pn186 (2186h)	Low-Frequency Control Filter Correction (Speed / Pos / Trq)			
	Setting Range	Setting Unit	Default Setting	When Enabled
	-100 to +100	0.1 Hz	0	Immediately

8.16.2 Compatible Adjustment Functions

The compatible adjustment functions are used together with manual tuning. You can use these functions to improve adjustment results. These functions allow you to use the same functions as for Σ-III-series SERVOPACKs to adjust Σ-X-series SERVOPACKs.

(1) Feedforward

The feedforward function applies feedforward compensation to position control to shorten the positioning time.

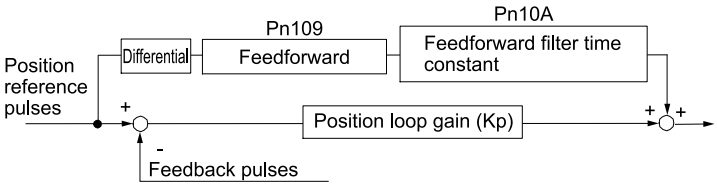

Pn109 (2109h)	Feedforward			Speed Pos Trq
	Setting Range	Setting Unit	Default Setting	When Enabled
	0 to 100	1%	0	Immediately
Pn10A (210Ah)	Feedforward Filter Time Constant			Speed Pos Trq
	Setting Range	Setting Unit	Default Setting	When Enabled
	0 to 6400	0.01 ms	0	Immediately

Note:

If you set the feedforward value too high, the machine may vibrate. As a guideline, use a setting of 80% or less.

(2) Mode Switching (Changing between P and PI Control)

You can use mode switching to automatically change between P control and PI control.

Overshooting caused by acceleration and deceleration can be suppressed and the settling time can be reduced by setting the switching condition and switching levels.

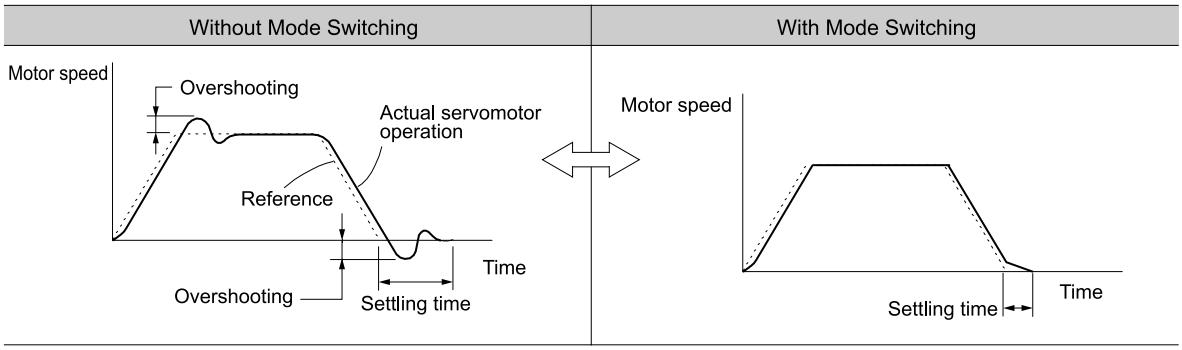

(a) Related Parameters

Select the switching condition for mode switching with Pn10B = n.□□□X.

Parameter		Mode Switching Selection	Parameter That Sets the Level		When Enabled
			Rotary Servomotor	Linear Servomotor	
Pn10B (210Bh)	n.□□□0 (default setting)	Use the internal torque reference as the condition.	Pn10C (210Ch)		Immediately
	n.□□□1	Use the speed reference as the condition.	Pn10D (210Dh)	Pn181 (2181h)	
	n.□□□2	Use the acceleration as the condition.	Pn10E (210Eh)	Pn182 (2182h)	
	n.□□□3	Use the position deviation as the condition.	Pn10F (210Fh)		
	n.□□□4	Do not use mode switching.	–		

◆ Parameters That Set the Switching Levels

- Rotary Servomotors

Pn10C (210Ch)	Mode Switching Level for Torque Reference			Speed Pos Trq
	Setting Range	Setting Unit	Default Setting	When Enabled
	0 to 800	1%	200	Immediately
Pn10D (210Dh)	Mode Switching Level for Speed Reference			Speed Pos Trq
	Setting Range	Setting Unit	Default Setting	When Enabled
	0 to 10000	1 min^{-1}	0	Immediately

Continued on next page.

Continued from previous page.

Pn10E (210Eh)	Mode Switching Level for Acceleration			Speed Pos Trq
	Setting Range	Setting Unit	Default Setting	When Enabled
	0 to 30000	1 min^{-1}/s	0	Immediately
Pn10F (210Fh)	Mode Switching Level for Position Deviation			Speed Pos Trq
	Setting Range	Setting Unit	Default Setting	When Enabled
	0 to 10000	1 reference unit	0	Immediately

- Linear Servomotors

Pn10C (210Ch)	Mode Switching Level for Torque Reference			Speed Pos Trq
	Setting Range	Setting Unit	Default Setting	When Enabled
	0 to 800	1%	200	Immediately
Pn181 (2181h)	Mode Switching Level for Speed Reference			Speed Pos Trq
	Setting Range	Setting Unit	Default Setting	When Enabled
	0 to 10000	1 mm/s	0	Immediately
Pn182 (2182h)	Mode Switching Level for Acceleration			Speed Pos Trq
	Setting Range	Setting Unit	Default Setting	When Enabled
	0 to 30000	1 mm/s^2	0	Immediately
Pn10F (210Fh)	Mode Switching Level for Position Deviation			Speed Pos Trq
	Setting Range	Setting Unit	Default Setting	When Enabled
	0 to 10000	1 reference unit	0	Immediately

◆ Using the Internal Torque Reference as the Mode Switching Condition (Default Setting)

When the internal torque reference equals or exceeds the torque set for Pn10C (Mode Switching Level for Torque Reference), the speed loop is changed to P control.

The default setting for the torque reference level is 200%.

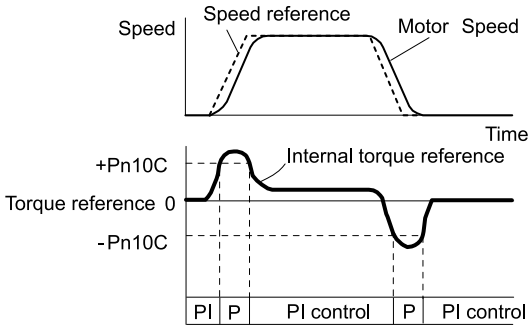

◆ Using the Speed Reference as the Mode Switching Condition

- Rotary Servomotors
  When the speed reference equals or exceeds the speed set for Pn10D (Mode Switching Level for Speed Reference), the speed loop is changed to P control.

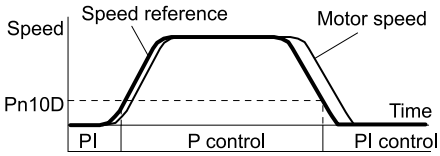

- Linear Servomotors
  When the speed reference equals or exceeds the speed set for Pn181 (Mode Switching Level for Speed Reference), the speed loop is changed to P control.

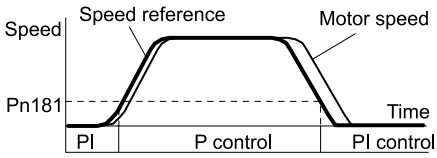

◆ Using the Acceleration as the Mode Switching Condition

- Rotary Servomotors
  When the speed reference equals or exceeds the acceleration rate set for Pn10E (Mode Switching Level for Position Deviation), the speed loop is changed to P control.

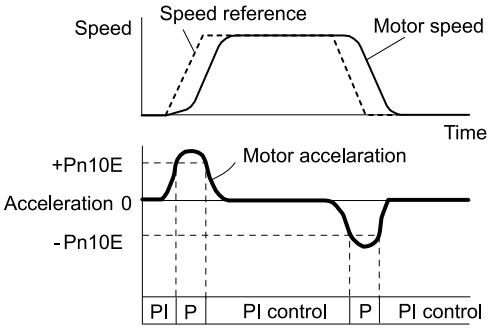

- Linear Servomotors
  When the speed reference equals or exceeds the acceleration rate set for Pn182 (Mode Switching Level for Acceleration), the speed loop is changed to P control.

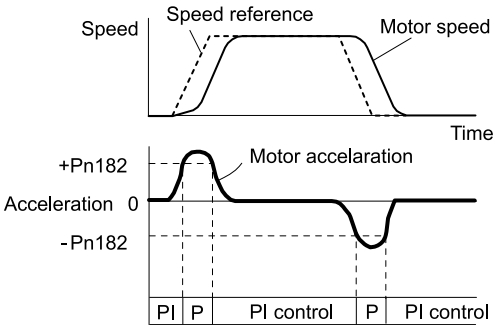

◆ Using the Position Deviation as the Mode Switching Condition

When the position deviation equals or exceeds the value set for Pn10F (Mode Switching Level for Position Deviation), the speed loop is changed to P control.

This setting is enabled only for position control.

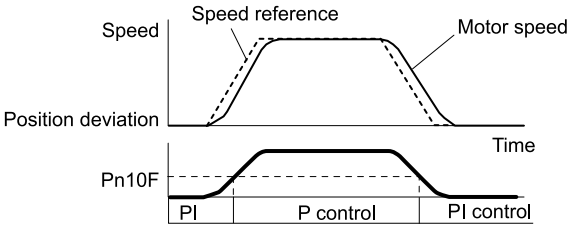

(3) Position Integral

The position integral is the integral function of the position loop. This parameter is effective for electronic cams and electronic shafts.

Pn11F (211Fh)	Position Integral Time Constant			Speed Pos Trq
	Setting Range	Setting Unit	Default Setting	When Enabled
	0 to 50000	0.1 ms	0	Immediately

8.17 Diagnostic Tool

8.17.1 Mechanical Analysis

(1) Overview

You can connect the SERVOPACK to a computer to measure the frequency characteristics of the machine. This allows you to measure the frequency characteristics of the machine without using a measuring instrument.

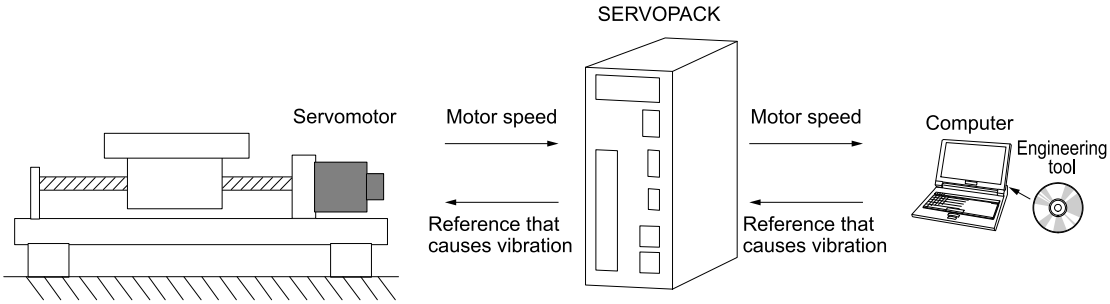

The servomotor is used to cause machine vibration and then the speed frequency characteristics for the motor torque are measured. The measured frequency characteristics can be used to determine the machine resonance.

You determine the machine resonance for use in servo tuning and as reference for considering changes to the machine. The performance of the servo cannot be completely utilized depending on the rigidity of the machine. You may need to consider making changes to the machine. The information can also be used as reference for servo tuning to help you adjust parameters, such as the servo rigidity and torque filter time constant.

You can also use the information to set parameters, such as the notch filters.

Information When this function is being executed, the Less-Deviation Control Function is disabled.

⚠ WARNING

Mechanical analysis is a measurement function that actually drives the machine and therefore presents hazards. Before you execute mechanical analysis, check the information provided in the SigmaWin+ operating manual.

(2) Frequency Characteristics

The motor is used to cause the machine to vibrate and the frequency characteristics from the torque to the motor speed are measured to determine the machine characteristics. For a normal machine, the resonance frequencies are clear when the frequency characteristics are plotted on graphs with the gain and phase (Bode plots). The Bode plots show the size (gain) of the response of the machine to which the torque is applied, and the phase delay (phase) in the response for each frequency. Also, the machine resonance frequency can be determined from the maximum frequency of the valleys (anti-resonance) and peaks (resonance) of the gain and the phase delay.

For a servomotor without a load or for a rigid mechanism, the gain and phase change gradually in the Bode plots.

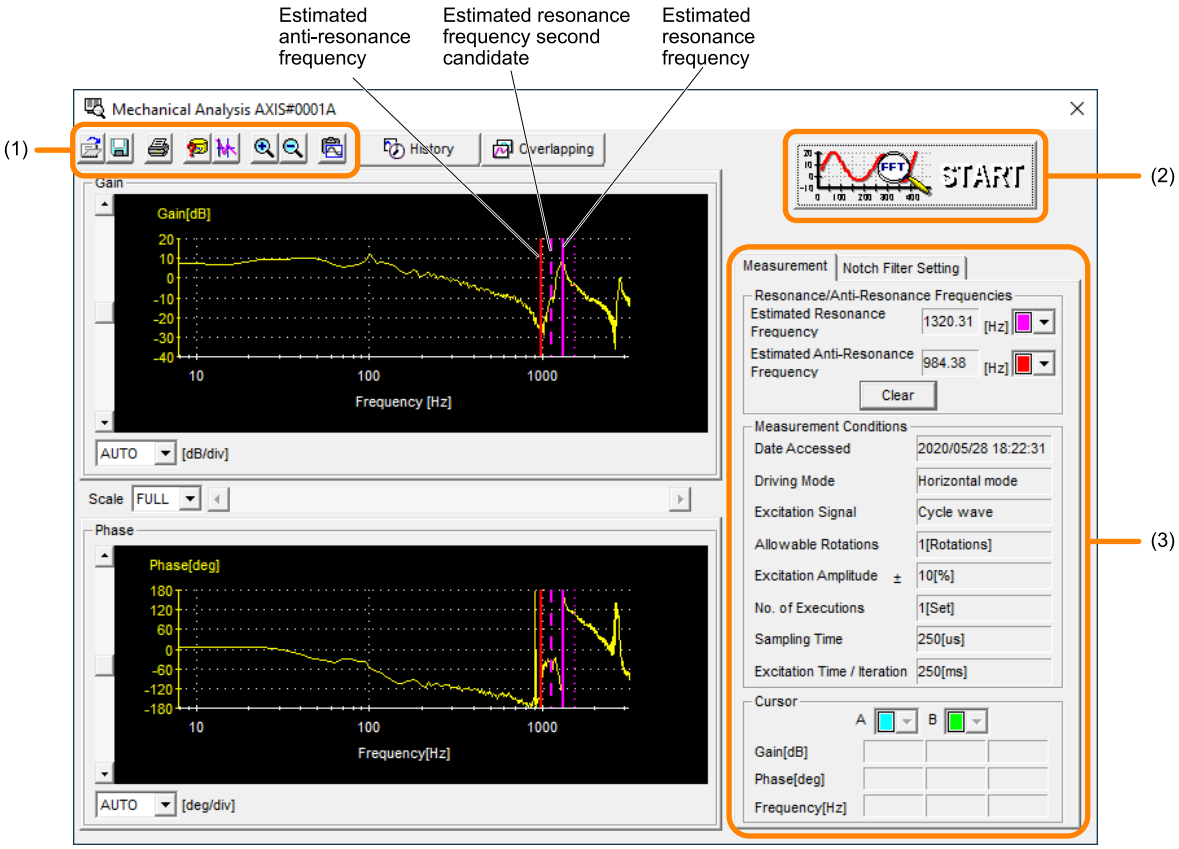

No.	Item	Meaning
(1)	Toolbar	-
(2)	[START] button	Click the [START] button to start analysis.
(3)	[Measurement] tab and [Notch Filter Setting] tab	[Measurement] tab: Displays detailed information on the results of analysis. [Notch Filter Setting] tab: Displays the notch filter frequencies. You can set these values in the parameters.

8.17.2 Easy FFT

The machine is made to vibrate and a resonance frequency is detected from the generated vibration to set notch filters according to the detected resonance frequencies. This is used to eliminate high-frequency vibration and noise.

During execution of Easy FFT, a frequency waveform reference is sent from the SERVOPACK to the servomotor to automatically cause the shaft to rotate multiple times within 1/4th of a rotation, thus causing the machine to vibrate.

Execute this function after the servo is turned OFF if operation of the SERVOPACK results in high frequency noise and vibration.

⚠ WARNING

Never touch the servomotor or machine during execution of Easy FFT.

There is a risk of injury.

⚠ CAUTION

Use Easy FFT when the servo gain is low, such as in the initial stage of servo tuning.

If you execute Easy FFT after you increase the gain, the machine may vibrate depending on the machine characteristics or gain balance.

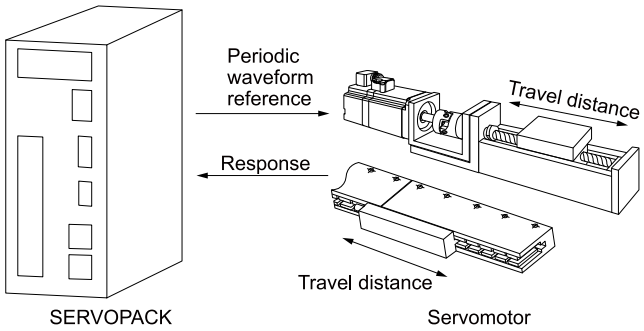

This function is built into the SERVOPACK for compatibility with previous products. Normally use autotuning without a host reference for tuning.

(1) Preparations

Always check the following before you execute Easy FFT.

- The parameters must not be write prohibited.
- The main circuit power must be ON.
- Pn00C must be set to n.□□□0 (Function Selection for Test without a Motor is disabled).
- There must be no alarms.
- There must be no hard wire base block (HWBB).
- The servo must be OFF.
- There must be no overtravel.
- An external reference must not be input.

(2) Applicable Tools

The following table lists the tools that you can use to perform EasyFFT.

Tool	Fn No./Function Name	Operating Procedure Reference
Digital Operator	Fn206	Σ-7/Σ-X-Series Digital Operator Operating Manual (Manual No.: SIEP S800001 33)
SigmaWin+	[Diagnostic] – [Easy FFT]	*(3) Operating Procedure on page 491*

(3) Operating Procedure

Use the following procedure for Easy FFT.

1. **Click the [ ] button for the servo drive in the workspace of the Main Window of the SigmaWin+.**
2. **Click [Easy FFT] in the [Menu] window.**

   The [Easy FFT] window will be displayed.

   Click the [Cancel] button to cancel Easy FFT. The Main Window will return.

3. **Click the [OK] button.**

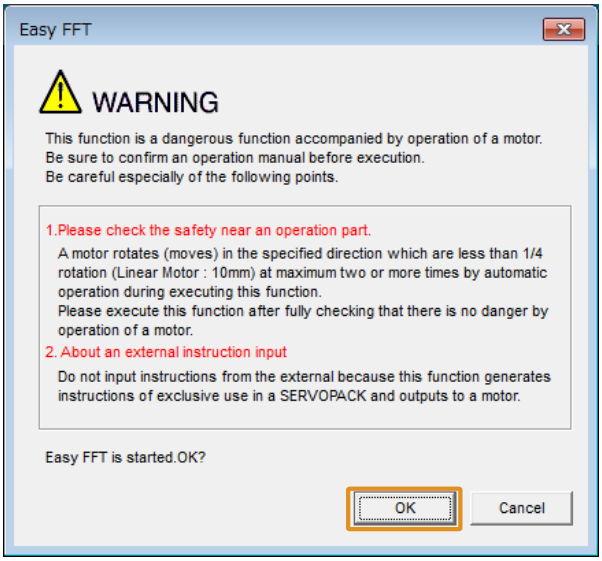

4. **Click the [Servo ON] button.**

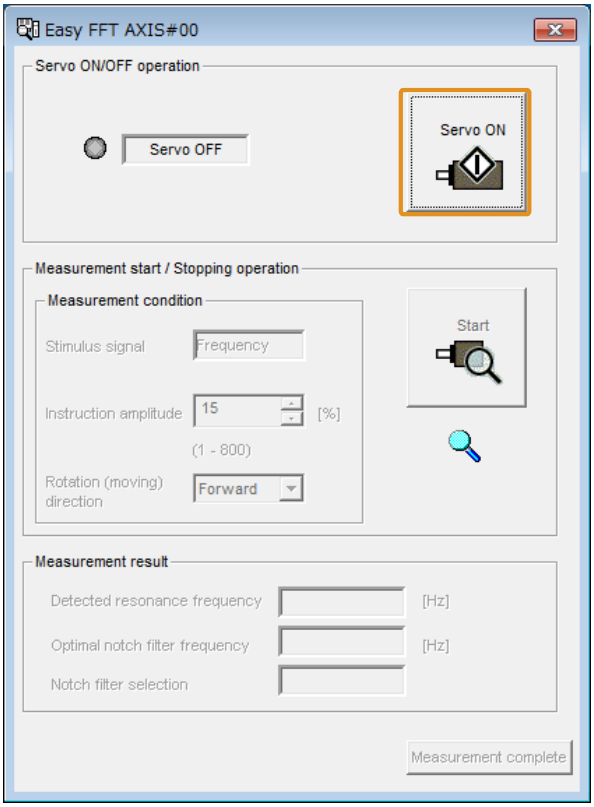

5. **Select [instruction amplitude] and [Rotation (moving) direction] in [Measurement condition], and then click the [Start] button.**

The servomotor shaft will rotate and measurements will start.

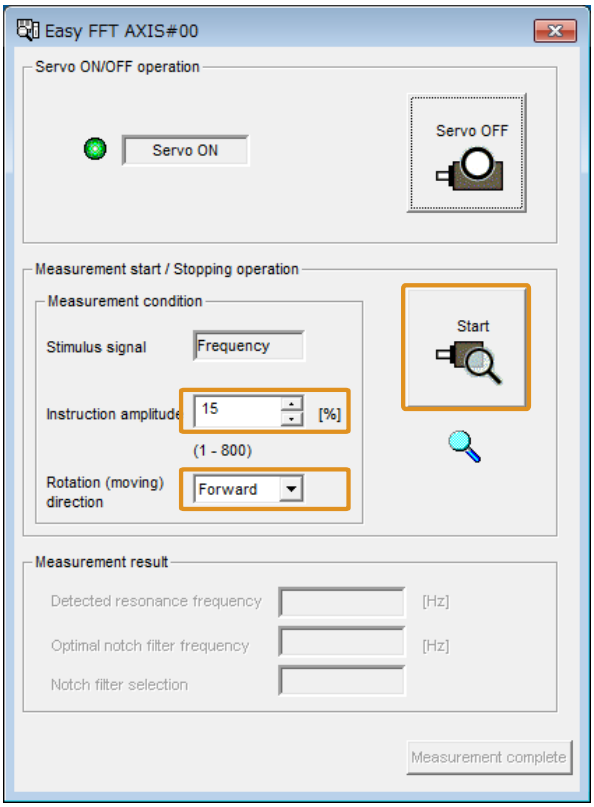

When measurements have been completed, the measurement results will be displayed.

6. **Check the results in [Measurement result] and then click the [Measurement complete] button.**

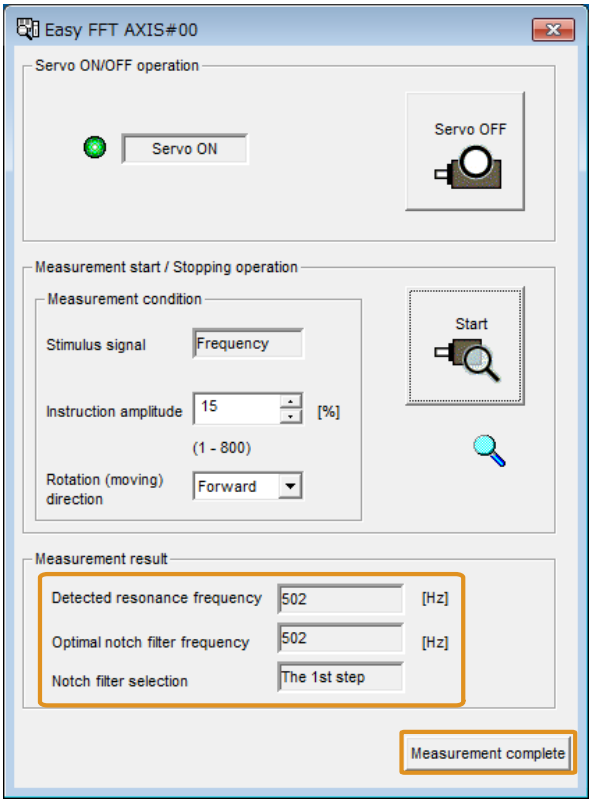

7. **Click the [Result Writing] button if you want to set the measurement results in the parameters.**

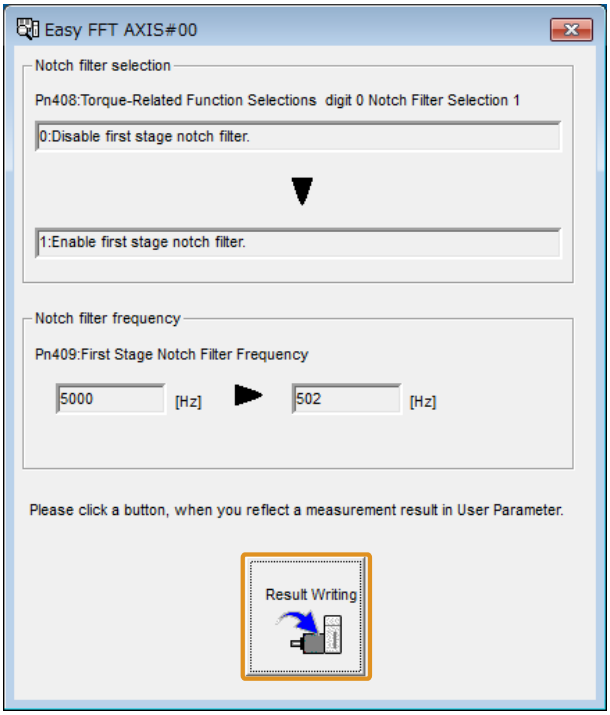

This concludes the procedure to set up Easy FFT.

(4) Related Parameters

The following parameters are automatically adjusted or used as reference when you execute Easy FFT.
Do not change the settings of these parameters during execution of Easy FFT.

Parameter	Name	Automatic Changes
Pn408 (2408h)	Torque-Related Function Selections	Yes
Pn409 (2409h)	First Stage Notch Filter Frequency	Yes
Pn40A (240Ah)	First Stage Notch Filter Q Value	No
Pn40C (240Ch)	Second Stage Notch Filter Frequency	Yes
Pn40D (240Dh)	Second Stage Notch Filter Q Value	No
Pn456 (2456h)	Sweep Torque Reference Amplitude	No

Yes: The parameter is automatically set.
No: The parameter is not automatically set, but the setting is read during execution.

9

Monitoring

This chapter provides information on monitoring SERVOPACK product information and SERVOPACK status.

9.1 Monitoring Product Information 496
9.1.1 Items That You Can Monitor 496
9.1.2 Operating Procedure 496

9.2 Monitoring SERVOPACK Status 498
9.2.1 Servo Drive Information 498
9.2.2 Operation Monitor, Status Monitor, and I/O Monitor 498
9.2.3 I/O Signals Status Monitor 504

9.3 Monitoring Machine Operation Status and Signal Waveforms 506
9.3.1 Items That You Can Monitor 506
9.3.2 Using the SigmaWin+ 506
9.3.3 Using the Analog Monitors 509

9.4 Monitoring Product Life 514
9.4.1 Items That You Can Monitor 514
9.4.2 Operating Procedure 514
9.4.3 Preventative Maintenance 515

9.5 Alarm Tracing 517
9.5.1 Data for Which Alarm Tracing Is Performed 517
9.5.2 Applicable Tools 517

9.6 Error Detection Setting 518
9.6.1 Outline 518
9.6.2 Preparing Trace Data to Create Sample Data 518
9.6.3 Creating Sample Data and Setting the Error Judgment Baseline 519
9.6.4 Executing Error Detection 523

9.1 Monitoring Product Information

9.1.1 Items That You Can Monitor

The items that you can monitor in the [Product Information] window of the SigmaWin+ are listed below.

Monitor Items	
Information on SERVOPACKs	• Model/Type • Serial Number • Manufacturing Date • Software version (SW Ver.) • Remarks
Information on Servomotors	• Model/Type • Serial Number • Manufacturing Date • Remarks
Information on Encoders	• Model/Type • Serial Number • Manufacturing Date • Software version (SW Ver.) • Remarks
Information on Option Modules	• Model/Type • Serial Number • Manufacturing Date • Software version (SW Ver.) • Remarks

9.1.2 Operating Procedure

Use the following procedure to display the servo drive information.

1. **Click the [ ] button for the servo drive in the workspace of the Main Window of the SigmaWin+.**

   The [Menu] window will be displayed.

2. **Click [Product Information] in the [Basic Functions] area.**

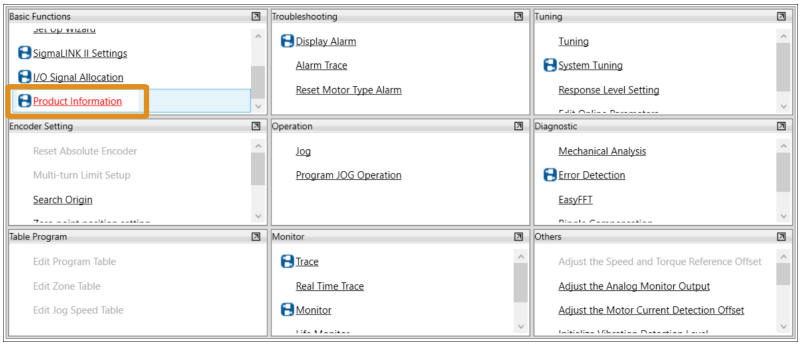

   The [Read Product Information] window will be displayed.

Read Product Information

Product Information	Export				
– 0001-SGDXS-R90A	QR Code				
SERVOPACK	Model/Type	Serial Number	Manufacturing Date	SW Ver.	Remarks
SERVOPACK	SGDXS-R90A				[Specification] : Standard
Motor	Model/Type	Number	Manufacturing Date	SW Ver.	Remarks
1 Motor	SGMXJ-02AUA21A1				[Resolution] : 67108864 [Pulse [Encoder type] : absolute
1 Encoder	UTTAI-B26AX				
Feedback Option Module	Model/Type	Serial Number	Manufacturing Date	SW Ver.	Remarks
Option Module					[Specification] : Standard [Resolution] : 8388608 [Pulse/ [Encoder type] : incremental
Motor					
Encoder	JZDP-Z001-000				

Information With the digital operator, you can use Fn011, Fn012, and Fn01E to monitor this information. Refer to the following manual for the differences in the monitor items compared with the SigmaWin+.

Σ-7-/Σ-X-Series Digital Operator Operating Manual (Manual No.: SIEP S800001 33)

9.2 Monitoring SERVOPACK Status

9.2.1 Servo Drive Information

Use the following procedure to display the servo drive Information.

- Start the SigmaWin+. The servo drive status will be automatically displayed when you go online with a SERVOPACK.

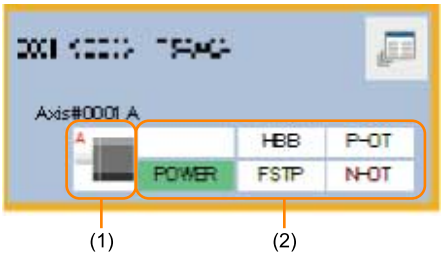

Symbol	Description
(1)	The servomotor type is displayed.
(2)	The servo drive status is displayed.

9.2.2 Operation Monitor, Status Monitor, and I/O Monitor

(1) Operating Procedure

1. **Click the [ ] button for the servo drive in the workspace of the Main Window of the SigmaWin+.**

   The [Menu] window will be displayed.

2. **Click [Monitor] in the [Monitor] area.**

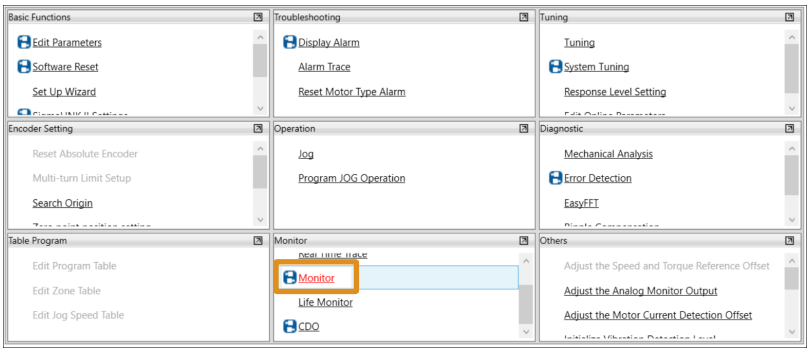

[Operation], [Status], and [I/O] will be displayed in the [Monitor] window.

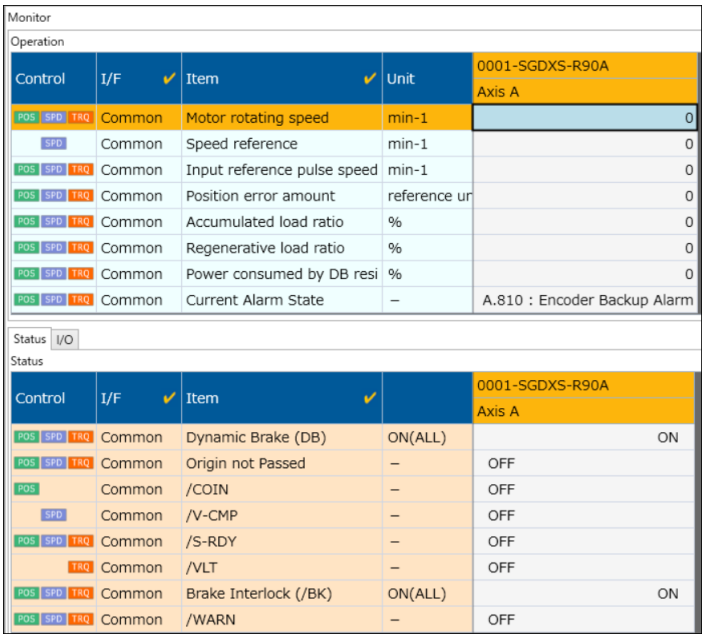

Information You can flexibly change the contents that are displayed in the [Monitor] window. Refer to the following manual for details.

Engineering Tool SigmaWin+ Operation Manual (Manual No.: SIET S800001 34)

(2) Items That You Can Monitor

The items that you can monitor in the [Operation] window, [Status] window, and [I/O] window are listed below.

(a) [Operation] Window

Important The margins that can be monitored are the margins for the operating limits of the SERVOPACK and servomotor. However, these margins provide no guarantees about the long-term reliability of the product.

Information If you are connecting the advanced safety module to the SERVOPACK, monitor items for the advanced safety module will also be displayed. For details, refer to the following manuals.

Σ-X-Series AC Servo Drive Advanced Safety Module with Safety over EtherCAT (FSoE) Communications References Product Manual (Manual No.: SIEP C710812 25)

Σ-X-Series AC Servo Drive Advanced Safety Module Digital I/O Product Manual (Manual No.: SIEP C710812 26)

Monitor Items	Description	Setting Unit
Motor Speed	Displays the current motor speed.	min^{-1}
Speed Reference	Displays the current speed reference value.	min^{-1}
Torque Reference	Displays the current torque reference value.	%
Angle of Rotation 1 (number of encoder pulses from encoder phase C)	This item is displayed when a rotary servomotor is connected. Displays the number of pulses that the encoder has rotated from encoder phase C.	pulse
Electrical Angle 1 (encoder pulses from polarity origin)	This item is displayed when a linear servomotor is connected. Displays the number of pulses that the encoder has moved from the polarity origin.	pulse
Angle of Rotation 2 (electrical angle from polarity origin)	This item is displayed when a rotary servomotor is connected. Displays the electrical angle that the encoder has rotated from the polarity origin.	deg
Electrical Angle 2 (electrical angle from polarity origin)	This item is displayed when a linear servomotor is connected. Displays the electrical angle that the encoder has moved from the polarity origin.	deg
Input Reference Pulse Speed	Displays the speed reference value by pulse reference input.	min^{-1}

Continued on next page.

Continued from previous page.

Monitor Items	Description	Setting Unit
Deviation Counter (Position Deviation)	Displays the position deviation during position control.	reference unit
Cumulative Load	Displays the effective value in a 10-second cycle with rated torque as 100%.	%
Regenerative Load	Displays the effective value in a 10-second cycle with the processable power in the regenerative resistor as 100%.	%
DB Resistor Consumption Power	Displays the effective value in a 10-second cycle with the processable power in the dynamic brake resistor as 100%.	%
Input Reference Pulse Counter	Displays the counter value of the pulse reference input.	reference unit
Feedback Pulse Counter	Displays the number of pulses that were fed back to the SERVOPACK from the encoder.	pulse
Fully Closed Feedback Pulse Counter	Displays the number of pulses that were fed back to the SERVOPACK from the external encoder used in fully-closed loop control.	External encoder resolution
Upper Limit Setting of Motor Maximum Speed/ Upper Limit Setting of Encoder Output Resolution	Displays the upper limit value of the maximum motor speed setting or the encoder resolution setting.	–
Total Operating Time	Displays the cumulative time that the control and main circuit power supplies of the SERVOPACK were turned ON.	100 ms
Overheat Protection Input	Displays the voltage input by the Overheat Protection Input (TH) signal.	0.01 V
Current Backlash Compensation Value	Displays the backlash compensation value.	0.1 reference unit
Backlash Compensation Value Setting Limit	Displays the upper limit of the backlash compensation value setting.	0.1 reference unit
Power Consumption	Displays the power consumption of the SERVOPACK.	W
Consumed Power	Displays the power consumption of the SERVOPACK.	0.001 Wh
Cumulative Power Consumption	Displays the cumulative power consumption of the SERVOPACK from power ON.	Wh
Absolute Encoder Multiturn Data	Displays the current multiturn data of the absolute encoder.	–
Absolute Encoder Position within One Rotation	Displays the position information within one rotation of the absolute encoder.	Pulse
Lower Bits of Absolute Encoder Position	Displays the current position information (lower bits) of the absolute encoder.	pulse
Upper Bits of Absolute Encoder Position	Displays the current position information (upper bits) of the absolute encoder.	pulse
Estimated Vibration	Displays the estimated value of vibration by analyzing the vibration component from servomotor response.	min^{-1}
Maximum Value of Amplitude of Estimated Vibration	Displays the maximum value of estimated vibration from power ON.	min^{-1}
Estimated External Disturbance Torque	Displays the estimated value of disturbance by analyzing the disturbance component from motor response.	%
Maximum Value of Estimated External Disturbance Torque	Displays the maximum value of estimated external disturbance torque from power ON.	%
Minimum Value of Estimated External Disturbance Torque	Displays the minimum value of estimated external disturbance torque from power ON.	%
Identified Moment of Inertia Ratio	Displays the result of estimating the load moment of inertia during SERVOPACK operation.	%

Continued on next page.

Continued from previous page.

Monitor Items	Description	Setting Unit
Maximum Identified Moment of Inertia Ratio	Displays the maximum value of the identified moment of inertia ratio from power ON.	%
Minimum Identified Moment of Inertia Ratio	Displays the minimum value of the identified moment of inertia ratio from power ON.	%
Number of Serial Encoder Communications Errors	Displays the total number of serial encoder communications errors from when the power was turned ON.	Time
Settling Time	Displays the time from the position reference distribution completed (DEN) signal to the rise in the positioning completion (/COIN or PSET) signal.	0.1 ms
Maximum Settling Time	Displays the maximum value of the settling time from power ON.	0.1 ms
Amount of Overshoot	Displays the maximum value of position deviation overshooting by analyzing the positioning status in the servo.	reference unit
Maximum Amount of Overshoot	Displays the maximum value of the amount of overshoot from power ON.	reference unit
Residual Vibration Frequency	Displays the residual vibration (shaking in a short cycle by machine stand vibration) frequency by analyzing the positioning status in the servo.	0.1 Hz
Maximum Value of Accumulated Load Ratio	Displays the maximum value of Un009 (Accumulated Load Ratio).	%
Margin until Overload	Displays the margin until A.710 (Instantaneous Overload) or A.720 (Continuous Overload) is detected. If the margin until overload drops below 0%, A.710 (Instantaneous Overload) or A.720 (Continuous Overload) is detected.	0.01%
Margin until Regenerative Overload	Displays the margin until A.320 (Regenerative Overload) is detected. If the margin until regenerative overload drops below 0%, A.320 (Regenerative Overload) is detected.	0.01%
Margin until Overvoltage	Displays the margin until A.400 (Overvoltage) is detected. If the margin until overvoltage drops below 0 V, A.400 (Overvoltage) is detected.	V
Margin until Undervoltage	Displays the margin until A.410 (Undervoltage) is detected. If the margin until undervoltage drops below 0 V, A.410 (Undervoltage) is detected.	V
Temperature Margin until SERVOPACK Overheats	Displays the margin until A.7A1 (Internal Temperature Error 1) or A.7A2 (Internal Temperature Error 2) is detected. If the temperature margin until the SERVOPACK overheats drops below 0°C, A.7A1 (Internal Temperature Error 1) or A.7A2 (Internal Temperature Error 2) is detected.	°C
Temperature Margin until Servomotor Overheats	Displays the margin until A.860 (Encoder Overheated) is detected. If the temperature margin drops below 0°C, A.860 (Encoder Overheated) is detected.	°C
Encoder Power Supplied Time	Displays the cumulative time that power was supplied to the encoder.	100 ms
Encoder Power Supply Voltage	Displays the power supply voltage supplied to the encoder. A guildeline for the normal value is given next. • Standard specification servomotor: 3.9 V or higher • Σ-7-compatible specification servomotor: 4.5 V to 5.5 V	0.1 V
Encoder Battery Voltage	Displays the voltage of the battery for the absolute encoder. If the voltage drops below 2.7 V, A.930 (Low Battery Voltage) occurs.	0.1 V
Motor Total Number of Rotations	Displays the total number of rotations that the motor rotated since it was shipped from the factory. The value is incremented even if the motor does not complete one rotation.	100 rev
Maintenance Prediction Monitor - Bearings	Displays the prediction value for when to perform maintenance on the servomotor bearings. The prediction value is displayed with the unused status of the servomotor treated as 100%, and the value decreases according to the total number of rotations of the motor. Use a monitor value of 0% as a guideline for the maintenance period.	%

Continued on next page.

Continued from previous page.

Monitor Items	Description		Setting Unit
Maintenance Prediction Monitor - Oil Seal	Displays the prediction value for when to perform maintenance on the servomotor oil seal. The prediction value is displayed with the unused status of the servomotor treated as 100%, and the value decreases according to the total number of rotations of the motor. Use a monitor value of 0% as a guideline for the maintenance period.		%
Motor Vibration in X-Axis Direction	Displays the vibration in the X-axis direction of the accelerometer built into the servomotor. The refresh cycle is 1 ms.	The following figure shows the X-axis, Y-axis, and Z-axis directions of vibration in the motor. Vibration in the direction of the arrow is a positive value, and the opposite direction is a negative value. 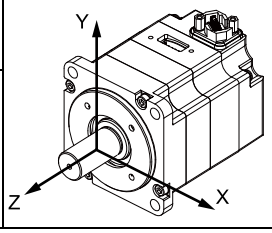 	0.0001 G (Resolution: 0.0625 G)
Motor Vibration in Y-Axis Direction	Displays the vibration in the Y-axis direction of the accelerometer built into the servomotor. The refresh cycle is 1 ms.		0.0001 G (Resolution: 0.0625 G)
Motor Vibration in Z-Axis Direction	Displays the vibration in the Z-axis direction of the accelerometer built into the servomotor. The refresh cycle is 1 ms.		0.0001 G (Resolution: 0.0625 G)
Motor Vibration XYZ Composite Value	Displays the composite value of vibration in the X-axis, Y-axis, and Z-axis directions of the motor. The refresh cycle is 1 ms.		0.0001 G (Resolution: 0.0625 G)
Maximum Motor Vibration	Displays the maximum value of the motor vibration XYZ composite value from power ON.		0.0001 G (Resolution: 0.0625 G)
Σ-LINK II Response Data 1 to 8	Displays the values of input signals for devices connected over Σ-LINK II.		–
Σ-LINK II Command Data 1 to 4	Displays the values of output signals for devices connected over Σ-LINK II.		–
Σ-LINK II Sequence Input Signal Monitor	Displays the status of a signal when a Σ-LINK II input signal is allocated to a SERVOPACK function.		–
Σ-LINK II Sequence Output Signal Monitor	Displays the status of a signal when a Σ-LINK II output signal is allocated to a SERVOPACK function.		–
Σ-LINK II Data Status	Displays the status related to Σ-LINK II data.		–
Position Amplifier Deviation	Displays the position deviation during position control in pulses.		pulse
6041h: Statusword	Displays the value of the Statusword (6041h) object in EtherCAT communications.		–
6061h: Modes of Operation	Displays the value of the Mode of Operation Display (6061h) object in EtherCAT communications.		–
6062h: Current Reference Position	Displays the value of the Position Demand Value (6062h) object in EtherCAT communications.		Pos. unit
6063h: Feedback Position Pulse	Displays the value of the Position Actual Internal Value (6063h) object in EtherCAT communications.		Inc
6064h:Feedback Position	Displays the value of the Position Actual Value (6064h) object in EtherCAT communications.		Pos. unit
606Bh: Speed Reference	Displays the value of the Velocity Demand Value (606Bh) object in EtherCAT communications.		Vel. unit
606Ch: Feedback Speed	Displays the value of the Velocity Actual Value (606Ch) object in EtherCAT communications.		Vel. unit
6074h: Torque Reference	Displays the value of the Torque Demand Value (6074h) object in EtherCAT communications.		Trq. unit
60B9h: Touch Probe Status	Displays the value of the Touch Probe Status (60B9h) object in EtherCAT communications.		–
60BAh: Touch Probe 1 Latched Position	Displays the value of the Touch Probe 1 Positive Edge (60BAh) object in EtherCAT communications.		Pos. unit
60Bbh: Touch Probe 1 Latched Position	Displays the value of the Touch Probe 1 Negative Edge (60BBh) object in EtherCAT communications.		Pos. unit
60BCh: Touch Probe 2 Latched Position	Displays the value of the Touch Probe 2 Positive Edge (60BCh) object in EtherCAT communications.		Pos. unit

Continued on next page.

Continued from previous page.

Monitor Items	Description	Setting Unit
60BDh: Touch Probe 2 Latched Position	Displays the value of the Touch Probe 2 Negative Edge (60BDh) object in EtherCAT communications.	Pos. unit
60F4h: Position Deviation	Displays the value of the Following Error Actual Value (60F4h) object in EtherCAT communications.	Pos. unit
60FCh: Reference Position Pulse	Displays the value of the Position Demand Internal Value (60FCh) object in EtherCAT communications.	Pos. unit
1C32h: 1: EtherCAT Communications Type	Displays the value of the synchronization type (subindex 1) of the Sync Manager 2 Synchronization (1C32h) object in EtherCAT communications.	–
1C32h: 2: EtherCAT Communications Synchronization Cycle	Displays the value of the cycle time (subindex 2) of the Sync Manager 2 Synchronization (1C32h) object in EtherCAT communications.	ns
1C32h: 11: EtherCAT Receive Event Miss Count	Displays the value of the SM event missed counter (subindex 11) of the Sync Manager 2 Synchronization (1C32h) object in EtherCAT communications.	–

(b) [Status] Window

Information

If you are connecting the advanced safety module to the SERVOPACK, monitor items for the advanced safety module will also be displayed. For details, refer to the following manual.

Σ-X-Series AC Servo Drive Advanced Safety Module with Safety over EtherCAT (FSoE) Communications References Product Manual (Manual No.: SIEP C710812 25)

Σ-X-Series AC Servo Drive Advanced Safety Module Digital I/O Product Manual (Manual No.: SIEP C710812 26)

Monitor Items	
• Active Gain Monitor • Main Circuit • Encoder (PGRDY) • Motor Power (Request) • Motor Power ON • Dynamic Brake (DB) • Rotation Direction • Mode Switch • Speed Reference • Torque Reference • Position Reference (PULS)	• Position Reference Direction • AC Power ON • Surge Current Limiting Resistor Short Relay • Regenerative Transistor • Regenerative Error Detection • Overcurrent • Origin Not Passed • Moment of Inertia Estimation • Polarity Detection • Polarity Identification Completed • Speed Ripple Compensation in Progress

(c) [I/O] Window

Information

If you are connecting the advanced safety module to the SERVOPACK, monitor items for the advanced safety module will also be displayed. For details, refer to the following manual.

Σ-X-Series AC Servo Drive Advanced Safety Module with Safety over EtherCAT (FSoE) Communications References Product Manual (Manual No.: SIEP C710812 25)

Σ-X-Series AC Servo Drive Advanced Safety Module Digital I/O Product Manual (Manual No.: SIEP C710812 26)

Monitor Items	
Input Signal Status	**Output Signal Status**
• P-OT (Forward Drive Prohibit Input) Signal • N-OT (Reverse Drive Prohibit Input) Signal • /P-CL (Forward External Torque Limit Input) Signal • /N-CL (Reverse External Torque Limit Input) Signal • /G-SEL (Gain Selection Input) Signal • /P-DET (Polarity Detection Input) Signal • /DEC (Origin Return Deceleration Switch Input) Signal • /Probe1 (Probe 1 Latch Input) Signal • /Probe2 (Probe 2 Latch Input) Signal • /Home (Home Switch Input) Signal • FSTP (Forced Stop Input) Signal • Σ-LINK II Sequence Input Signal Monitor	• ALM (Servo Alarm Output) Signal • /COIN (Positioning Completion Output) Signal • /V-CMP (Speed Coincidence Detection Output) Signal • /TGON (Rotation Detection Output) Signal • /S-RDY (Servo Ready Output) Signal • /CLT (Torque Limit Detection Output) Signal • /VLT (Speed Limit Detection Output) Signal • /BK (Brake Output) Signal • /WARN (Warning Output) Signal • /NEAR (Near Output) Signal • PAO (Encoder Divided Pulse Output Phase A) Signal • PBO (Encoder Divided Pulse Output Phase B) Signal • PCO (Encoder Divided Pulse Output Phase C) Signal • /PM (Preventative Maintenance Output) Signal • Σ-LINK II Sequence Output Signal Monitor

9.2.3 I/O Signals Status Monitor

Use the following procedure to check the status of the I/O signals.

1. **Click the [ ] button for the servo drive in the workspace of the Main Window of the SigmaWin+.**

   The [Menu] window will be displayed.

2. **Click [I/O Signal Allocation] in the [Basic Functions] area.**

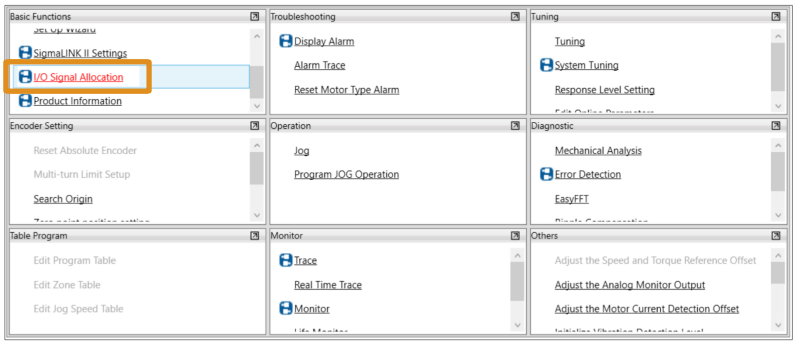

   The [I/O Signal Allocation] window will be displayed.

3. **Click the [Input Signal] tab to check the status of input signals.**

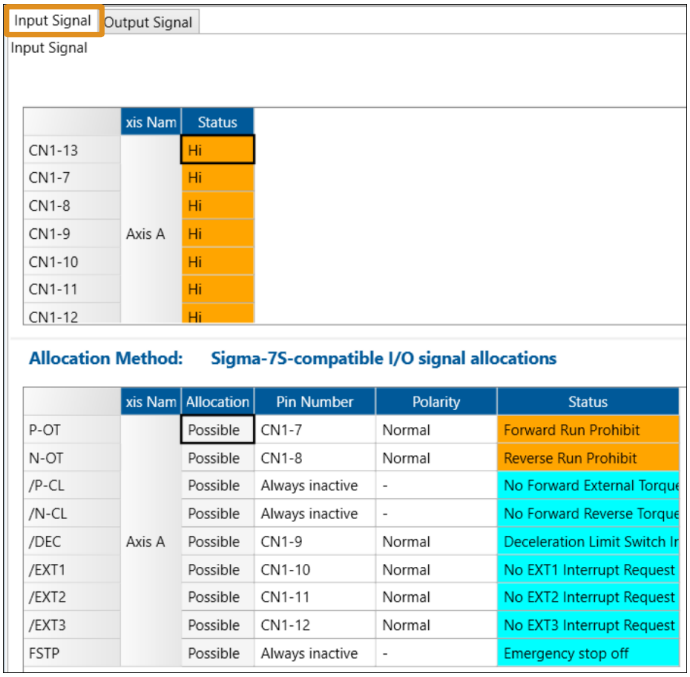

	xis Nam	Status
CN1-13	Axis A	Hi
CN1-7		Hi
CN1-8		Hi
CN1-9		Hi
CN1-10		Hi
CN1-11		Hi
CN1-12		Hi

	xis Nam	Allocation	Pin Number	Polarity	Status
P-OT	Axis A	Possible	CN1-7	Normal	Forward Run Prohibit
N-OT		Possible	CN1-8	Normal	Reverse Run Prohibit
/P-CL		Possible	Always inactive	-	No Forward External Torque
/N-CL		Possible	Always inactive	-	No Forward Reverse Torque
/DEC		Possible	CN1-9	Normal	Deceleration Limit Switch In
/EXT1		Possible	CN1-10	Normal	No EXT1 Interrupt Request
/EXT2		Possible	CN1-11	Normal	No EXT2 Interrupt Request
/EXT3		Possible	CN1-12	Normal	No EXT3 Interrupt Request
FSTP		Possible	Always inactive	-	Emergency stop off

4. **Click the [Output Signal] tab to check the status of output signals.**

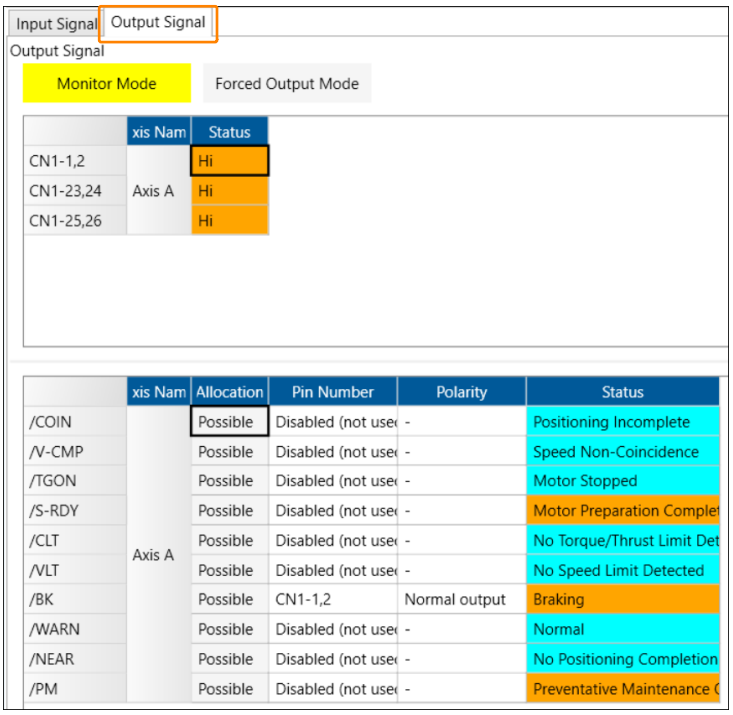

	xis Nam	Status
CN1-1,2	Axis A	Hi
CN1-23,24		Hi
CN1-25,26		Hi

	xis Nam	Allocation	Pin Number	Polarity	Status
/COIN	Axis A	Possible	Disabled (not use	-	Positioning Incomplete
/V-CMP		Possible	Disabled (not use	-	Speed Non-Coincidence
/TGON		Possible	Disabled (not use	-	Motor Stopped
/S-RDY		Possible	Disabled (not use	-	Motor Preparation Complet
/CLT		Possible	Disabled (not use	-	No Torque/Thrust Limit Det
/VLT		Possible	Disabled (not use	-	No Speed Limit Detected
/BK		Possible	CN1-1,2	Normal output	Braking
/WARN		Possible	Disabled (not use	-	Normal
/NEAR		Possible	Disabled (not use	-	No Positioning Completion
/PM		Possible	Disabled (not use	-	Preventative Maintenance (

Information You can also use the above window to check wiring.

- Checking Input Signal Wiring
  Change the signal status at the host controller. If the input signal status on the window changes accordingly, then the wiring is correct.
- Checking Output Signal Wiring
  Click the [Forced Output Mode] button. This will force the output signal status to change. If the signal status at the host controller changes accordingly, then the wiring is correct.
  You cannot use the [Forced Output Mode] button while the servo is ON.

Refer to the following manual for details.

Engineering Tool SigmaWin+ Operation Manual (Manual No.: SIET S800001 34)

9.3 Monitoring Machine Operation Status and Signal Waveforms

To monitor waveforms, use the SigmaWin+ trace function or a measuring instrument.

9.3.1 Items That You Can Monitor

You can use the SigmaWin+ or a measuring instrument to monitor the shaded items in the following block diagram.

- Rotary Servomotors

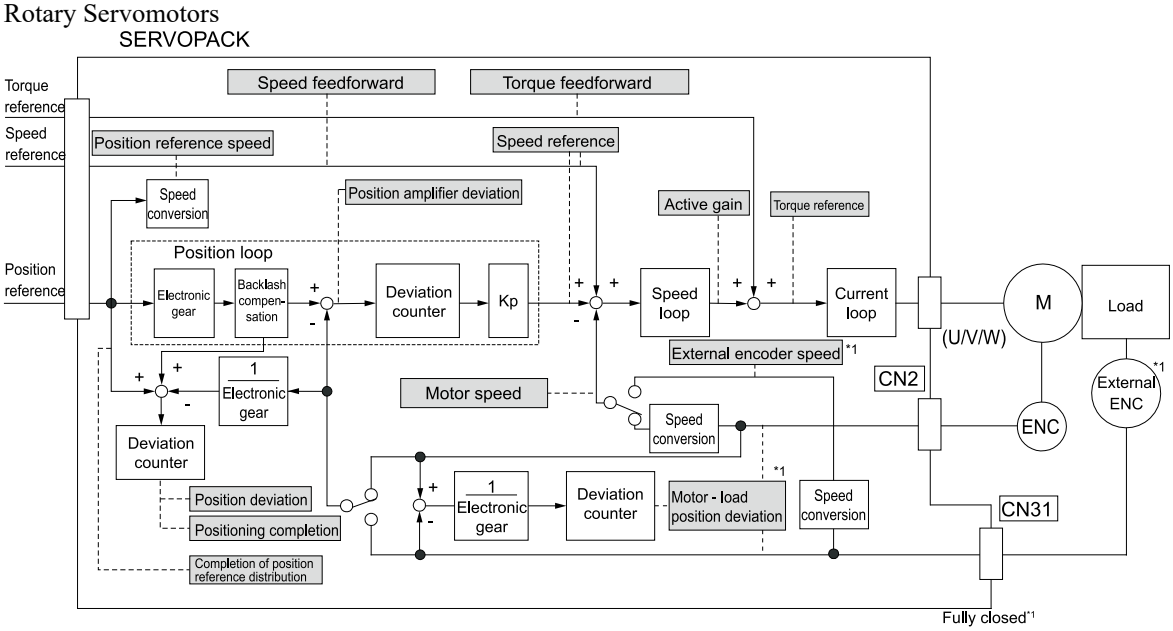

*1 Enabled when fully-closed loop control is being used.

- Linear Servomotors

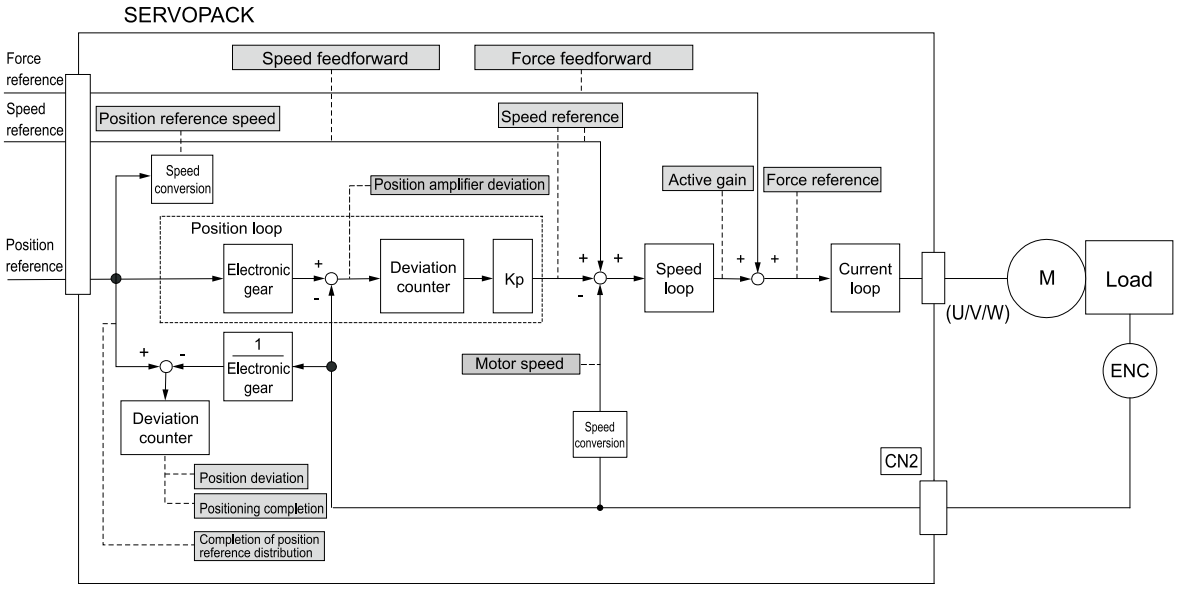

9.3.2 Using the SigmaWin+

This section describes how to trace data and I/O with the SigmaWin+.

Refer to the following manual for detailed operating procedures for the SigmaWin+.

Engineering Tool SigmaWin+ Operation Manual (Manual No.: SIET S800001 34)

(1) Operating Procedure

1. **Click the [ ] button for the servo drive in the workspace of the Main Window of the SigmaWin+.**

   The [Menu] window will be displayed.

2. **Click [Trace] in the [Monitor] area.**

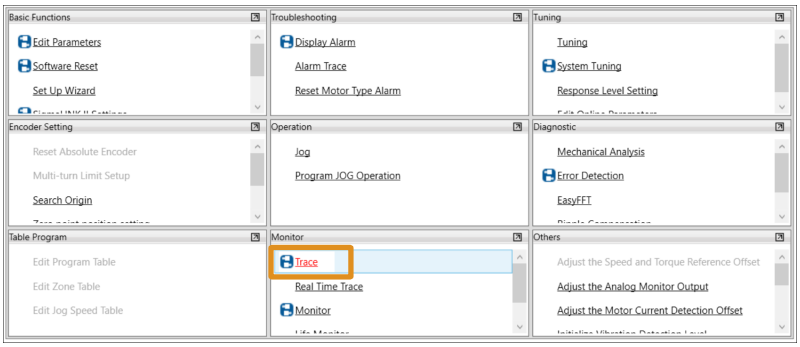

The [Trace] window will be displayed.

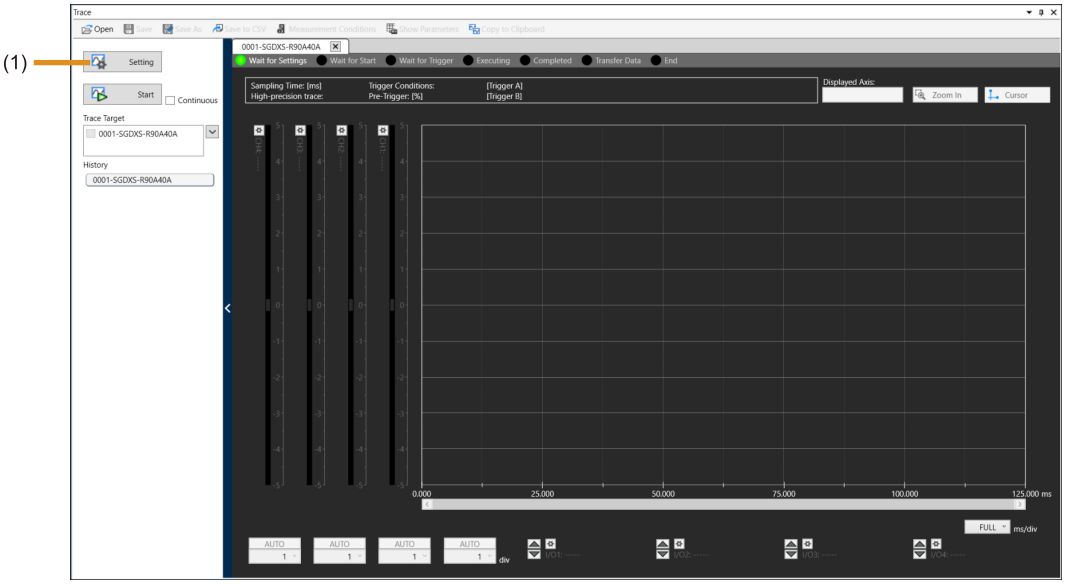

No.	Meaning
(1)	Click this button to display the [Trace Setting] window shown below, and set the data to trace and the trace conditions. 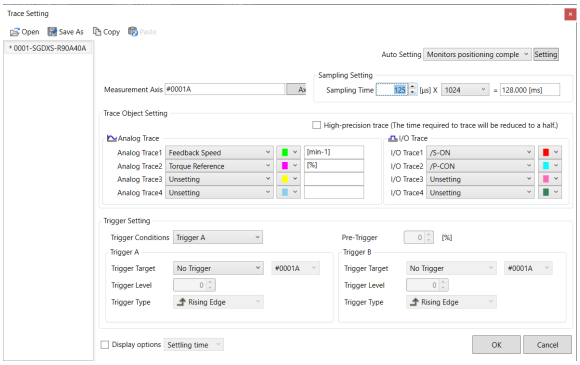

(2) Trace Objects

You can trace the following items.

(a) Data Tracing

Information

If you are connecting the advanced safety module to the SERVOPACK, trace objects for the advanced safety module will also be displayed. For details, refer to the following manual.

Σ-X-Series AC Servo Drive Advanced Safety Module with Safety over EtherCAT (FSoE) Communications References Product Manual (Manual No.: SIEP C710812 25)

Σ-X-Series AC Servo Drive Advanced Safety Module Digital I/O Product Manual (Manual No.: SIEP C710812 26)

Trace Objects	
• Feedback Speed • Torque Reference • Reference Speed • Position Reference Speed • Position Error (Deviation) • Position Amplifier Error (Deviation) • Position Deviation After Position Ref. Filter • Motor - Load Position Deviation • Speed Feedforward • Torque Feedforward • Effective (Active) Gain • Main Circuit DC Voltage • External Encoder Speed • Estimated Vibration • Estimated External Disturbance Torque	• Σ-LINK II Response Data 1 to 8 • Σ-LINK II Command Data 1 to 4 • Margin until Regenerative Overload • Margin until Overload • Temperature Margin until SERVOPACK Overheats • Temperature Margin until Servomotor Overheats • Margin until Undervoltage • Margin until Overvoltage • Identified Moment of Inertia Ratio • Motor Vibration in X-Axis Direction • Motor Vibration in Y-Axis Direction • Motor Vibration in Z-Axis Direction • Motor Vibration XYZ Composite Value • Current Reference • Low-Frequency Control Compensation Torque

(b) I/O Tracing

Information

If you are connecting the advanced safety module to the SERVOPACK, trace objects for the advanced safety module will also be displayed. For details, refer to the following manual.

Σ-X-Series AC Servo Drive Advanced Safety Module with Safety over EtherCAT (FSoE) Communications References Product Manual (Manual No.: SIEP C710812 25)

Σ-X-Series AC Servo Drive Advanced Safety Module Digital I/O Product Manual (Manual No.: SIEP C710812 26)

Trace Objects	
Input Signals	**Output Signals**
• P-OT (Forward Drive Prohibit Input) Signal • N-OT (Reverse Drive Prohibit Input) Signal • /P-CL (Forward External Torque Limit Input) Signal • /N-CL (Reverse External Torque Limit Input) Signal • /G-SEL (Gain Selection Input) Signal • /P-DET (Polarity Detection Input) Signal • /DEC (Origin Return Deceleration Switch Input) Signal • /Probe1 (Probe 1 Latch Input) Signal • /Probe2 (Probe 2 Latch Input) Signal • /Home (Home Switch Input) Signal • EXT_TRC (External Trace Input) Signal • FSTP (Forced Stop Input) Signal • /HWBB1 (Hard Wire Base Block Input 1) Signal • /HWBB2 (Hard Wire Base Block Input 2) Signal • Σ-LINK II Sequence Input 0 to 7	• ALM (Servo Alarm Output) Signal • /COIN (Positioning Completion Output) Signal • /V-CMP (Speed Coincidence Detection Output) Signal • /TGON (Rotation Detection Output) Signal • /S-RDY (Servo Ready Output) Signal • /CLT (Torque Limit Detection Output) Signal • /VLT (Speed Limit Detection Output) Signal • /BK (Brake Output) Signal • /WARN (Warning Output) Signal • /NEAR (Near Output) Signal • ALO1 (Alarm Code Output) Signal • ALO2 (Alarm Code Output) Signal • ALO3 (Alarm Code Output) Signal • PAO (Encoder Divided Pulse Output Phase A) Signal • PBO (Encoder Divided Pulse Output Phase B) Signal • PCO (Encoder Divided Pulse Output Phase C) Signal • ACON (Main Circuit ON) Signal • PDETCMP (Polarity Detection Completed) Signal • DEN (Position Reference Distribution Completed) Signal • Σ-LINK II Sequence Output 1 to 4 • High-Speed Output Signal for Trigger at Preset Position 1 to 3 (/HSO1 to 3) • Normal Output Signal for Trigger at Preset Position 1 to 3 (/NSO1 to 3)

9.3.3 Using the Analog Monitors

Connect a measuring instrument to the analog monitor connector (CN5) on the SERVOPACK to monitor analog signal waveforms. The measuring instrument is not provided by Yaskawa.

Refer to the following section for details on the connection.

☞ *4.10 Using the Analog Monitors on page 165*

(1) Setting the Monitor Object

Use Pn006 = n.□□XX and Pn007 = n.□□XX (Analog Monitor 1 and 2 Signal Selections) to set the items to monitor.

Line Color	Signal	Parameter Setting
White	Analog monitor 1	Pn006 (2006h) = n.□□XX
Red	Analog monitor 2	Pn007 (2007h) = n.□□XX
Black (2 lines)	GND	–

	Analog Monitor 1 Signal Selection Analog Monitor 2 Signal Selection			Speed Pos Trq	When Enabled
	Description	**Monitor Signal**	**Output Unit**	**Remarks**	
Pn006 (2006h) Pn007 (2007h)	n.□□00 [Default setting of Pn007 (2007h)]	Motor Speed	• Rotary servomotor: 1 V/1000 min-1 • Linear servomotor: 1 V/1000 mm/s	–	Immediately
	n.□□01	Speed Reference	• Rotary servomotor: 1 V/1000 min-1 • Linear servomotor: 1 V/1000 mm/s	–	
	n.□□02 [Default setting of Pn006 (2006h)]	Torque Reference	1 V/100% rated torque	–	
	n.□□03	Position Deviation	0.05 V/reference unit	0 V for speed or torque control	
	n.□□04	Position Amplifier Deviation	0.05 V/encoder pulse unit	Position deviation after electronic gear conversion	
	n.□□05	Position Command Speed	• Rotary servomotor: 1 V/1000 min-1 • Linear servomotor: 1 V/1000 mm/s	–	
	n.□□06	Reserved (Do not use.)	–	–	
	n.□□07	Motor - Load Position Deviation	0.01 V/reference unit	–	
	n.□□08	Positioning Completion	Positioning completed: 5 V Positioning not completed: 0 V	Completion is indicated by the output voltage.	
	n.□□09	Speed Feedforward	• Rotary servomotor: 1 V/1000 min-1 • Linear servomotor: 1 V/1000 mm/s	–	
	n.□□0A	Torque Feedforward	1 V/100% rated torque	–	
	n.□□0B	Active Gain *1	Gain 1: 1 V Gain 2: 2 V Gain 3: 3 V Gain 4: 4 V	The gain that is active is indicated by the output voltage.	
	n.□□0C	Completion of Position Reference Distribution	Distribution completed: 5 V Distribution not completed: 0 V	Completion is indicated by the output voltage.	
	n.□□0D	External Encoder Speed	1 V/1000 min-1	Value calculated at the motor shaft	
	n.□□10	Main Circuit DC Voltage	1 V/100 V (main circuit DC voltage)	–	

*1 Refer to the following section for details.
☞ *8.15.1 Gain Switching on page 455*

(2) Changing the Monitor Factor and Offset

You can change the monitor factors and offsets for the output voltages for analog monitor 1 and analog monitor 2. The relationships to the output voltages are as follows:

$$\text{Analog monitor 1 output voltage} = (-1) \times \left\{ \underset{\text{(Analog Monitor 1 Signal Selection)}}{\text{Pn006 = n.□□XX}} \times \underset{\text{(Analog Monitor 1 Magnification)}}{\text{Pn552}} + \underset{\text{(Analog Monitor 1 Offset Voltage)}}{\text{Pn550}} \right\}$$

$$\text{Analog monitor 2 output voltage} = (-1) \times \left\{ \underset{\text{(Analog Monitor 2 Signal Selection)}}{\text{Pn007 = n.□□XX}} \times \underset{\text{(Analog Monitor 2 Magnification)}}{\text{Pn553}} + \underset{\text{(Analog Monitor 2 Offset Voltage)}}{\text{Pn551}} \right\}$$

The following parameters are set.

Pn550 (2550h)	Analog Monitor 1 Offset Voltage			Speed Pos Trq
	Setting Range	Setting Unit	Default Setting	When Enabled
	-10000 to 10000	0.1 V	0	Immediately
Pn551 (2551h)	Analog Monitor 2 Offset Voltage			Speed Pos Trq
	Setting Range	Setting Unit	Default Setting	When Enabled
	-10000 to 10000	0.1 V	0	Immediately
Pn552 (2552h)	Analog Monitor 1 Magnification			Speed Pos Trq
	Setting Range	Setting Unit	Default Setting	When Enabled
	-10000 to 10000	× 0.01	100	Immediately
Pn553 (2553h)	Analog Monitor 2 Magnification			Speed Pos Trq
	Setting Range	Setting Unit	Default Setting	When Enabled
	-10000 to 10000	× 0.01	100	Immediately

Example: To set the monitor item to Pn006 = n.□□00 (Motor Speed)

When Pn552 = 100 (Setting unit: ×0.01)

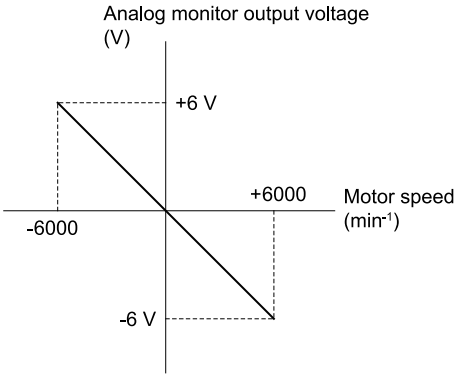

When Pn552 = 1000 (Setting unit: ×0.01)

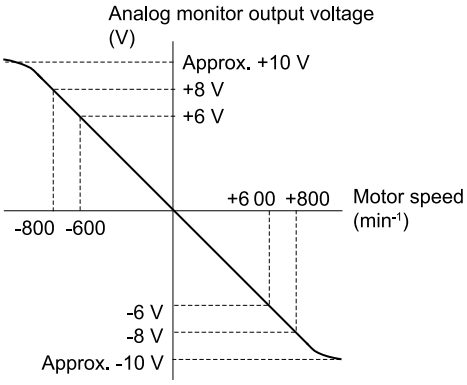

Note: The valid linearity range is ±8 V.
The resolution is 16 bits.

(3) Adjusting the Analog Monitor Output

You can manually adjust the offset and gain for the analog monitor outputs for the torque reference monitor and motor speed monitor.

The offset is adjusted to compensate for offset in the zero point caused by output voltage drift or noise in the monitoring system.

The gain is adjusted to match the sensitivity of the measuring system.

The offset and gain are adjusted at the factory. You normally do not need to adjust them.

(4) Adjustment Example

An example of adjusting the output of the motor speed monitor is provided below.

Offset Adjustment

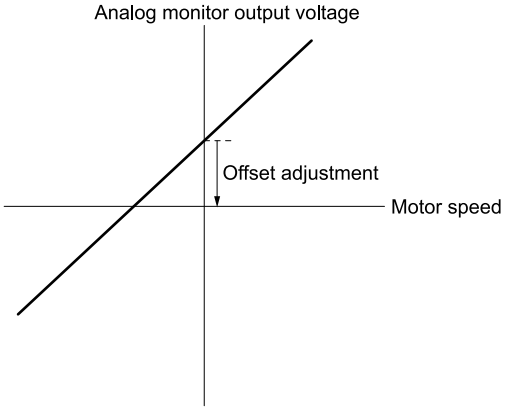

Item	Specification
Offset Adjustment Range	-2.4 V to 2.4 V
Adjustment Unit	18.9 mV/LSB

Gain Adjustment

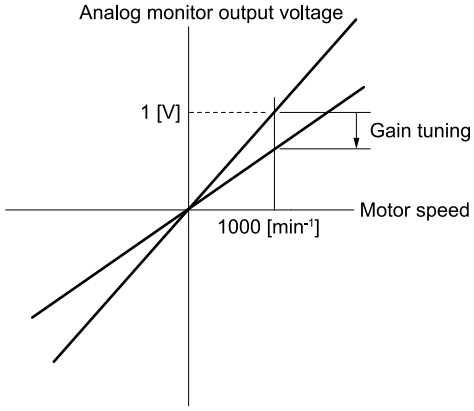

Item	Specification
Gain Adjustment Range	100 ±50%
Adjustment Unit	0.4%/LSB

The gain adjustment range is made using a 100% output value (gain adjustment of 0) as the reference value with an adjustment range of 50% to 150%. A setting example is given below.

- Setting the Adjustment Value to -125
  100 + (-125 × 0.4) = 50 [%]
  Therefore, the monitor output voltage goes to 50% of the original value.
- Setting the Adjustment Value to 125
  100 + (125 × 0.4) = 150 [%]
  Therefore, the monitor output voltage goes to 150% of the original value.

Information

- The adjustment values do not use parameters, so they will not change even if the parameter settings are initialized.
- Adjust the offset with the measuring instrument connected so that the analog monitor output value goes to zero. The following setting example achieves a zero output.
  - While power is not supplied to the servomotor, set the monitor signal to the torque reference.
  - In speed control, set the monitor signal to the position deviation.

(5) Preparations

Always check the following before you adjust the analog monitor output.

- The parameters must not be write prohibited.

(6) Applicable Tools

The following table lists the tools that you can use to perform analog monitor output tuning.

- Offset Adjustment

Tool	Fn No./Function Name	Reference
Digital Operator	Fn00C	Σ-7-/Σ-X-Series Digital Operator Operating Manual (Manual No.: SIEP S800001 33)
SigmaWin+	[Others] - [Adjusting the Analog Monitor Output]	*(7) Operating Procedure on page 512*

- Gain Adjustment

Tool	Fn No./Function Name	Reference
Digital Operator	Fn00D	Σ-7-/Σ-X-Series Digital Operator Operating Manual (Manual No.: SIEP S800001 33)
SigmaWin+	[Others] - [Adjusting the Analog Monitor Output]	*(7) Operating Procedure on page 512*

(7) Operating Procedure

Use the following procedure to adjust the analog monitor output.

1. **Click the [ ] button for the servo drive in the workspace of the Main Window of the SigmaWin+.**
2. **Click [Adjust the Analog Monitor Output] in the [Menu] window.**
   The [Adjust the Analog Monitor Output] window will be displayed.
3. **Click the [Zero Adjustment] or [Gain Adjustment] tab.**

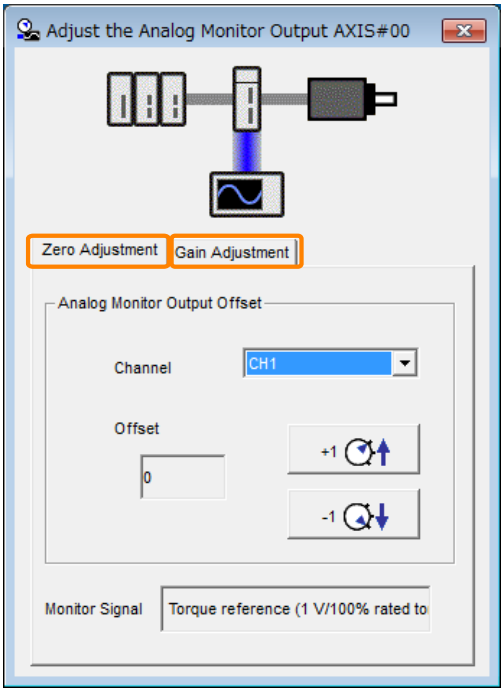

4. **While watching the analog monitor, use the [+1] and [-1] buttons to adjust the offset.**
   There are two channels: CH1 and CH2. If necessary, click the down arrow on the [Channel] and select the channel.

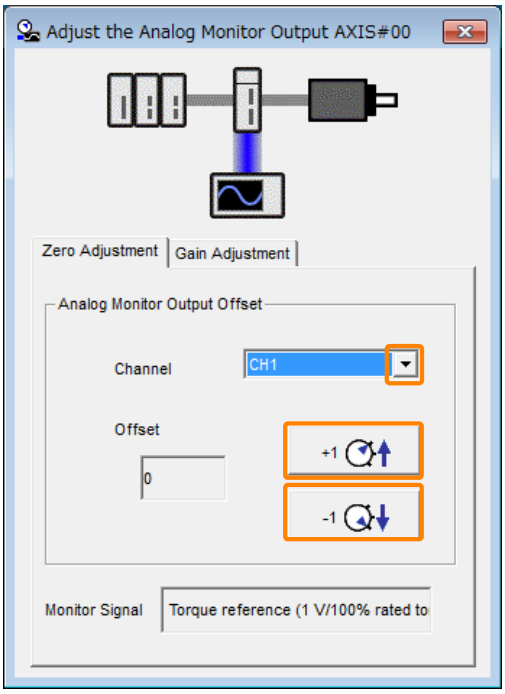

This concludes adjusting the analog monitor output.

9.4 Monitoring Product Life

9.4.1 Items That You Can Monitor

Monitor Items	Description
SERVOPACK Installation Environment	The operating status of the SERVOPACK in terms of the installation environment is displayed. Implement one or more of the following actions if the monitor value exceeds 100%. • Lower the surrounding temperature. • Decrease the load.
Servomotor Installation Environment	
Built-in Fan Service Life Prediction	The unused status of the SERVOPACK is treated as the 100% value. The value decreases each time the main circuit power supply is turned ON and each time the servo is turned OFF. Use a monitor value of 0% as a guideline for the replacement period. Refer to the following section for part replacement guidelines. ☞ *16.1.2 Guidelines for Part Replacement on page 695*
Capacitor Service Life Prediction	
Inrush Current Prevention Circuit Service Life Prediction	The unused status of the SERVOPACK is treated as the 100% value. The value decreases each time the main circuit power supply is turned ON and each time the servo is turned OFF. Use a monitor value of 0% as a guideline for the replacement period. Refer to the following section for part replacement guidelines. ☞ *16.1.2 Guidelines for Part Replacement on page 695*
Dynamic Brake Circuit Service Life Prediction	
Maintenance Prediction of Bearings	The prediction value is displayed with the unused status of the servomotor treated as 100%, and the value decreases according to the total number of rotations of the motor. Use a monitor value of 0% as a guideline for the maintenance period. The prediction value is calculated from the standard service life time for motor parts and the motor total number of rotations when the motor has rotated continuously at the rated speed. (The standard service life of the bearings is 20,000 hours. The service life depends on the actual usage conditions and environment.) Example: Servomotor with a rated speed of 3000 min^{-1} Rated speed 3000 [min^{-1}] × 60 [min] × 20000 [hours] = 3600 × 10^6 [revolutions] Maintenance prediction monitor: bearings [%] = (1 - (Current total number of rotations / 3600 × 10^6)) × 100 Refer to the following manual for details on the service life of motor parts. 📖 Σ-X-Series Rotary Servomotor Product Manual (Manual No.: SIEP C230210 00)
Maintenance Prediction of Oil Seal	The prediction value is displayed with the unused status of the servomotor treated as 100%, and the value decreases according to the total number of rotations of the motor. Use a monitor value of 0% as a guideline for the maintenance period. The prediction value is calculated from the standard service life time for motor parts and the motor total number of rotations when the motor has rotated continuously at the rated speed. (The standard service life of the oil seal is 5,000 hours. The service life depends on the actual usage conditions and environment.) Example: Servomotor with a rated speed of 3000 min^{-1} Rated speed 3000 [min^{-1}] × 60 [min] × 5000 [hours] = 900 × 10^6 [revolutions] Maintenance prediction monitor: oil seal [%] = (1 - (Current total number of rotations / 900 × 10^6)) × 100 Refer to the following manual for details on the service life of motor parts. 📖 Σ-X-Series Rotary Servomotor Product Manual (Manual No.: SIEP C230210 00)

9.4.2 Operating Procedure

Use the following procedure to monitor the installation environment, service life predictions, and maintenance predictions.

1. **Click the [ ] button for the servo drive in the workspace of the Main Window of the SigmaWin+.**

   The [Menu] window will be displayed.

2. **Click [Life Monitor] in the [Monitor] area.**

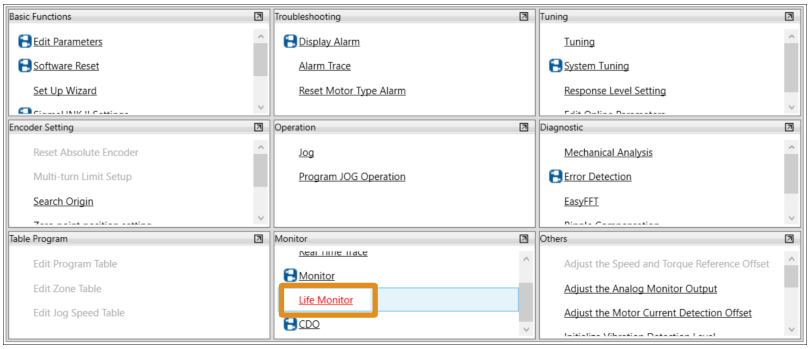

The [Life Monitor] window will be displayed.

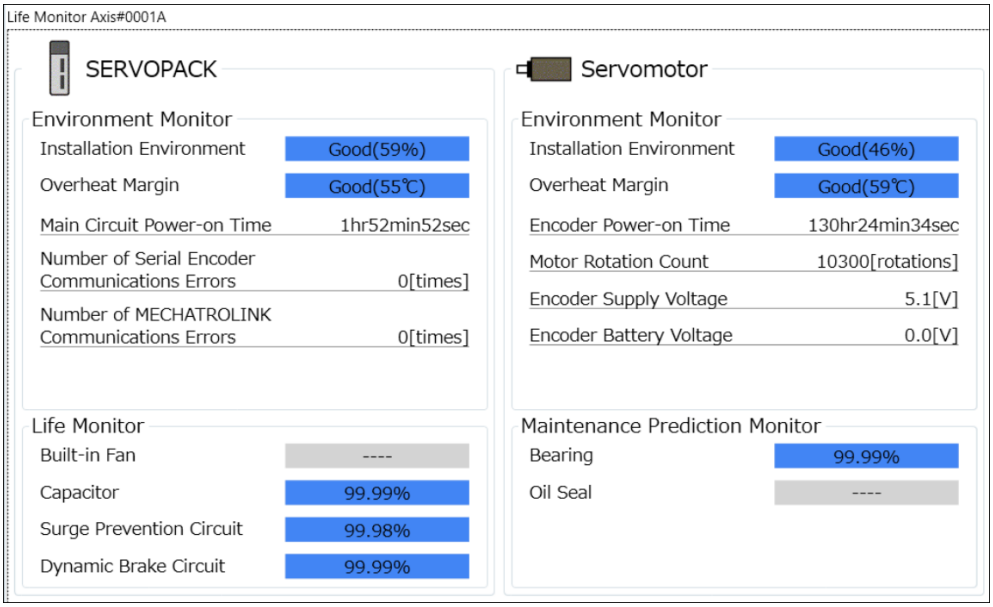

Information With the digital operator, you can use Un025 to Un02A, Un183 to Un188 to monitor this information.

9.4.3 Preventative Maintenance

You can use the following functions for preventative maintenance.

- Preventative maintenance warnings
- /PM (Preventative Maintenance Output) Signal

The SERVOPACK can notify the host controller when it is time to replace any of the main parts and when the service life of bearings and oil seals are reached.

(1) Preventative Maintenance Warning

(a) SERVOPACK Preventative Maintenance Warning

An A.9b0 warning (SERVOPACK Preventative Maintenance Warning) is detected when any of the following service life prediction values drops to 10% or less: SERVOPACK built-in fan life, capacitor life, inrush current prevention circuit life, and dynamic brake circuit life. You can change the setting of Pn00F = n.□□□X to enable or disable the SERVOPACK preventative maintenance warning.

		SERVOPACK Preventative Maintenance Warning Selection Speed Pos Trq		When Enabled
Pn00F (200Fh)	n.□□□X	0 Default	Do not detect SERVOPACK preventative maintenance warnings.	After restart
		1	Detect SERVOPACK preventative maintenance warnings.	

(b) Servomotor Preventative Maintenance Warning

For bearings and oil seals, which are consumable parts in the servomotor, an A.9b1 (Servomotor Preventative Maintenance Warning) is detected when one of the maintenance prediction values becomes 10% or lower. Use this warning as a guideline for when to perform maintenance.

You can change the setting of Pn00F = n.□□X□ to enable or disable the servomotor preventative maintenance warning.

		Servomotor Preventative Maintenance Warning Selection Speed Pos Trq		When Enabled
Pn00F (200Fh)	n.□□X□	0 Default	Do not detect servomotor preventative maintenance warnings.	After restart
		1	Detect servomotor preventative maintenance warnings.	

(2) /PM (Preventative Maintenance Output) Signal

The /PM (Preventative Maintenance Output) signal is output when any of the following service life prediction items reaches 10% or less.

- SERVOPACK fan service life prediction
- SERVOPACK capacitor service life prediction
- SERVOPACK inrush current prevention circuit service life prediction
- SERVOPACK dynamic brake circuit service life prediction
- Servomotor maintenance prediction of bearings
- Servomotor maintenance prediction of oil seal

Even if Pn00F is set to n.□□□0 (do not detect SERVOPACK preventative maintenance warnings) or Pn00F is set to n.□□0□ (do not detect servomotor preventative maintenance warnings), the /PM signal will still be output as long as it is allocated.

Classification	Signal	Connector Pin No.	Signal Status	Description
Output	/PM	Must be allocated.	ON (closed)	A service life prediction item has reached 10% or less.
			OFF (open)	All service life prediction items are greater than 10%.

Note:

You must allocate the /PM signal to use it. The parameters that you use depend on the allocation method.

Allocation Method	Parameter to Use
Σ-7S-compatible I/O Signal Allocation	• Pn50A = n.□□□1 (Σ-7S-compatible I/O Signal Allocations) • Pn514 = n.□X□□ (/PM (Preventative Maintenance Output) Signal Allocation)
Σ-LINK II Input Signal Allocation	• Pn50A = n.□□□2 (use Σ-LINK II input signal allocations) • Pn5BC (/PM (Preventative Maintenance Output) Signal Allocation)

Refer to the following section for details.

☞ *6.1.4 Output Signal Allocations on page 234*

9.5 Alarm Tracing

Alarm tracing records data in the SERVOPACK from before and after an alarm occurs. This data helps you to isolate the cause of the alarm.

You can display the data recorded in the SERVOPACK as a trace waveform on the SigmaWin+.

Information
- Alarms that occur when the power supply is turned ON are not recorded.
- Alarms that occur during the recording of alarm trace data are not recorded.
- Alarms that occur while utility functions are being executed are not recorded.

9.5.1 Data for Which Alarm Tracing Is Performed

Two types of data are recorded for alarm tracing: numeric data and I/O signal ON/OFF data.

Numeric Data	ON/OFF Data
• Torque reference [%] • Feedback speed [min^{-1}] • Reference speed [min^{-1}] • Position command speed [min^{-1}] • Position deviation [reference units] • Motor-load position deviation [reference units] • Main circuit DC voltage [V]	• ALM • Servo ON command (/S-ON) • Proportional control command (/P-CON) • Forward torque command (/P-CL) • Reverse torque command (/N-CL) • G-SEL1 signal (/G-SEL1) • ACON

9.5.2 Applicable Tools

The following table lists the tools that you can use to perform alarm tracing.

Tool	Fn No./Function Name	Reference
Digital Operator	You cannot display alarm tracing data from the digital operator.	
SigmaWin+	[Troubleshooting] - [Alarm Trace]	Engineering Tool SigmaWin+ Operation Manual (Manual No.: SIET S800001 34)

9.6 Error Detection Setting

9.6.1 Outline

Error detection is a function that compares the values of normal operating characteristics saved to the SERVOPACK in advance with the actual values during operation to judge errors. You can use this function to detect deterioration and failures in machines and equipment and to detect defective products. The detected results can be checked from the host controller.

The following table gives the steps to execute error detection and references for each step.

Step	Item	Reference
1	Preparing Trace Data for Sample Data	☞ *9.6.2 Preparing Trace Data to Create Sample Data on page 518*
2	Creating Sample Data and Setting the Error Judgment Baseline	☞ *9.6.3 Creating Sample Data and Setting the Error Judgment Baseline on page 519*
3	Executing Error Detection	☞ *9.6.4 Executing Error Detection on page 523*

Information

Error detection is performed by calculating the Mahalanobis distance of each sampling point from sample data saved to the SERVOPACK in advance and trace data obtained during operation. For the Mahalanobis distance of each sampling point, A.905 (Error Detection Warning) will occur when the number of points that exceed the judgment level registered in advance is greater than or equal to the number of error detection points. You can select up to two trace targets for calculating the Mahalanobis distance.

Term

Sample Data :

Sample data is the data set saved to the SERVOPACK in advance for error detection processing. The sample data is created by calculating the mean value and distribution value in waveform sample points from multiple waveforms when the SERVOPACK performed the same operation.

Mahalanobis Distance :

The Mahalanobis distance is an index that expresses the degree to which the operating values deviate from the sample data. The greater the Mahalanobis distance, the more the operating values are deviating from the sample data.

9.6.2 Preparing Trace Data to Create Sample Data

Prepare the trace data to create sample data.

Perform tracing using the same procedure as normal tracing and obtain multiple items of trace data (std file).

Important

If the SERVOPACK software version is 0007 or later, use the SigmaWin+ Ver. 7.42 or later to use error detection.

Important

Be careful of the following settings when acquiring trace data.

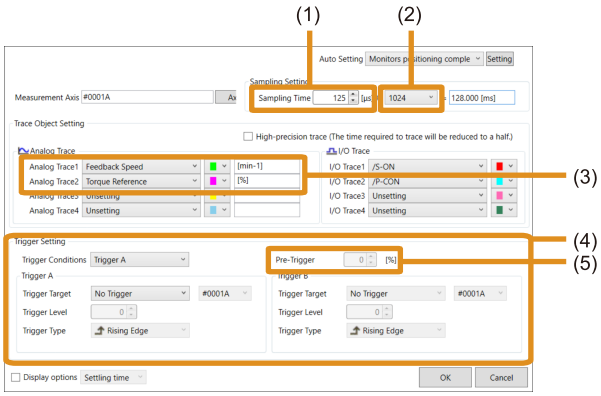

No.	Setting
(1)	Make this the same as the sampling time.
(2)	Set to “1024”.
(3)	Set analog trace 1 and analog trace 2 to the data for error detection (trace targets with which to calculate the Mahalanobis distance).
(4)	Make this the same as the trigger settings.
(5)	Set the pre-trigger to 0.

9.6.3 Creating Sample Data and Setting the Error Judgment Baseline

1. **Check if the trace data is finished being prepared, and check if the trace data (std file) is saved to the same computer.**

   Refer to the following section for details on preparing the trace data.

   ☞ *9.6.2 Preparing Trace Data to Create Sample Data on page 518*

2. **Click the [ ] button for the servo drive in the workspace of the Main Window of the SigmaWin+.**

   The [Menu] window will be displayed.

3. **Click [Error Detection] in the [Diagnostic] area.**

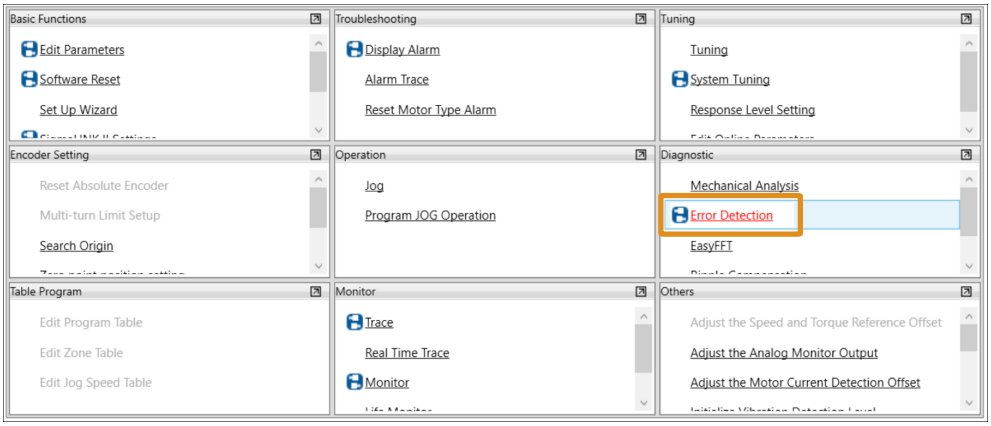

   The [Error Detection] window will be displayed.

4. **Click the [Edit Settings] button.**

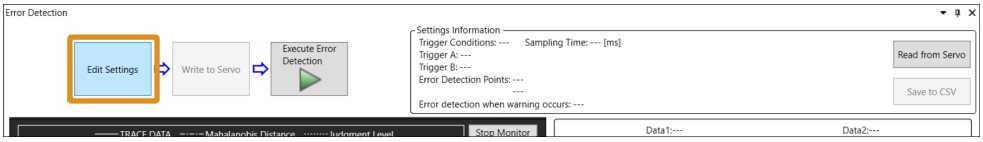

The [Edit Error Detection Settings] window will be displayed.

5. **Click the [Select File] button.**

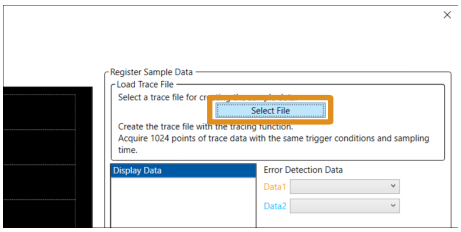

The [Open Trace File] window will be displayed.

6. **Select the prepared trace data (std file), and then click the [Open] button.**

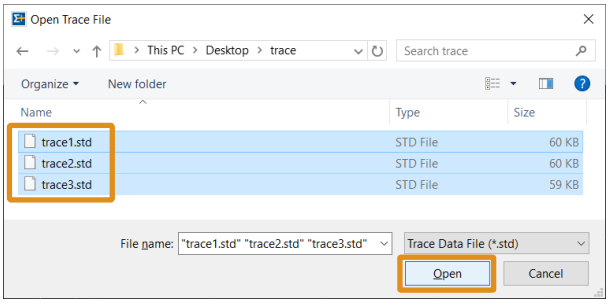

Information You can select multiple files by using the [Shift] key and [Ctrl] key while selecting files.

The selected files will be displayed on the [Error Detection-Edit Settings] window.

7. **Configure the following settings, and then click the [OK] button.**

- Select the check boxes for the data to use to create the sample data.
- Set the data to use for error detection in [Data 1] and [Data 2].
- Set the number of error detection points.
  Set whether to trigger A.905 when a difference of the number of points is detected for the sample data. If the setting is low, the odds of A.905 being triggered will increase. If the setting is 1024, A.905 will no longer be triggered.
  The number of error detection points can be changed when using error detection. The appropriate setting will depend on the device and usage conditions, so adjust the setting while actually using error detection.
- Select the error detection trace execution setting.

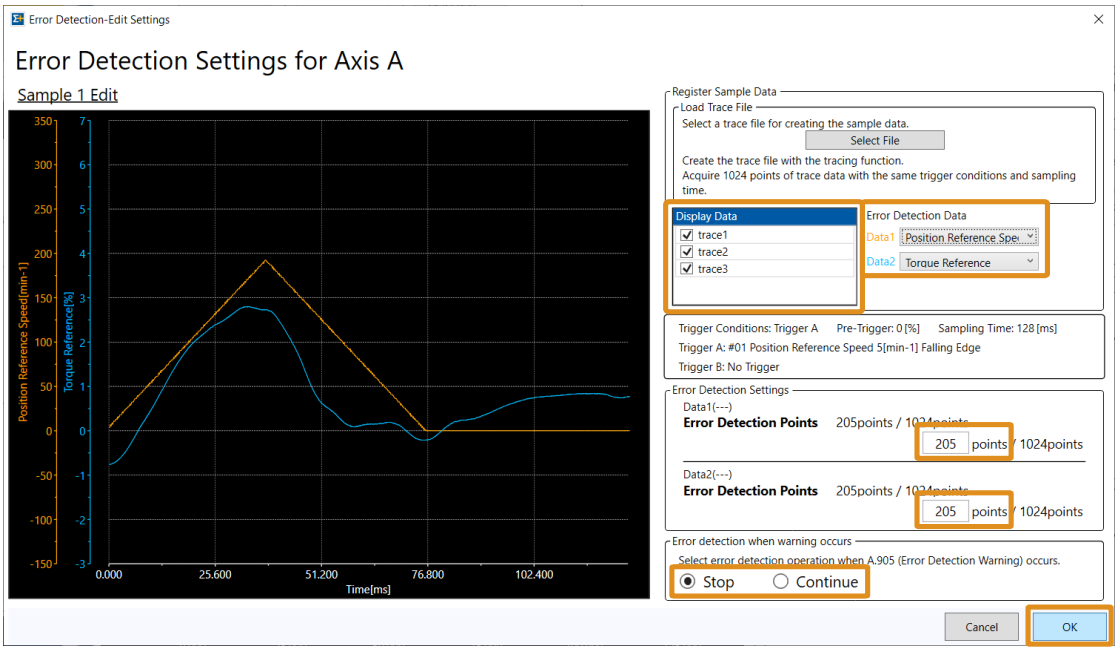

The average and dispersion values of the sample data will be displayed on the [Error Detection] window.

Information You can also set the error detection trace execution setting with the parameter. The following table gives details on the parameter to set.

		Execution Selection when Error Detection Warning Speed Pos Trq		When Enabled
Pn5C3 (25C3h)	n.□□X□	0 Default	Stop error detection when A.905 (Error Detection Warning) occurs.	After restart
		1	Do not stop error detection when A.905 (Error Detection Warning) occurs.	

8. **Check the waveforms of the sample data, and then click [Write to Servo] button.**

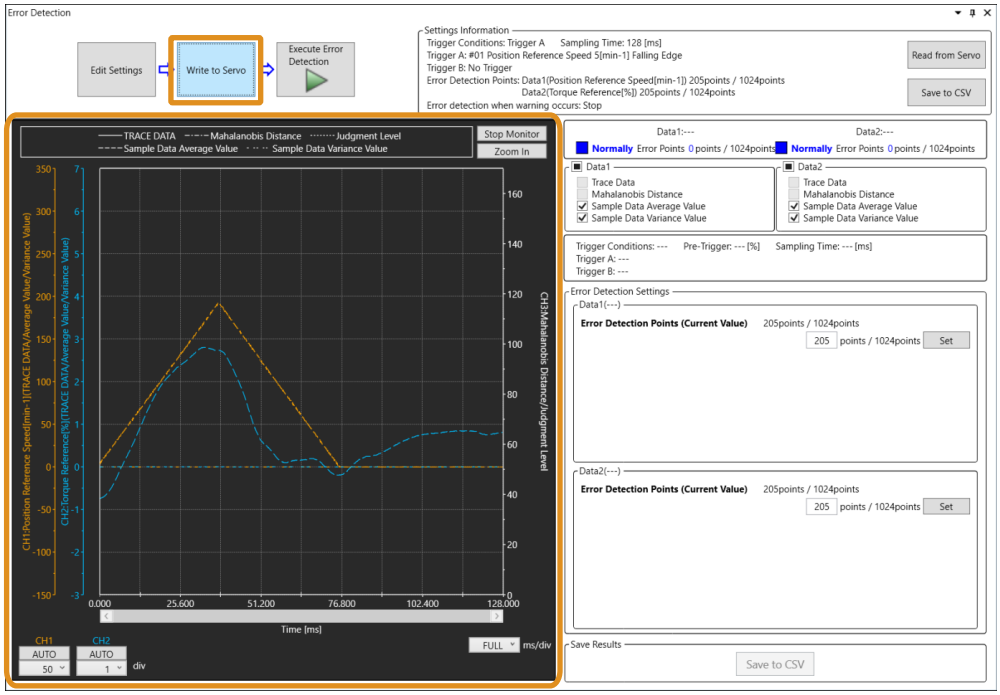

The message dialog box will be displayed.

9. **Click the [OK] button.**

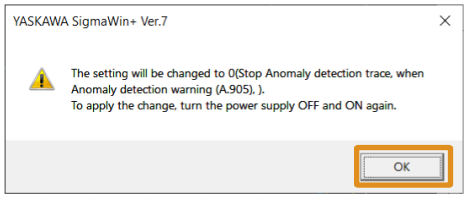

The displayed sample data will be written to the SERVOPACK.

10. **To enable the sample data saved to the SERVOPACK, turn the power to the SERVOPACK OFF and ON again.**

Information To edit the sample data, click the [Edit Settings] button. The [Edit Error Detection Settings] window will be displayed, and you can change the settings.

This concludes the procedure to create sample data. Next, use error detection. Refer to the following section for details.

☞ *9.6.4 Executing Error Detection on page 523*

(1) Related Parameters

The following section describes the setting procedure using the SigmaWin+.

☞ *9.6.3 Creating Sample Data and Setting the Error Judgment Baseline on page 519*

You can also configure these settings with SERVOPACK parameters. The parameters related to the settings are shown next.

Information The number of error detection points and the error judgment levels can be set with parameters.

The error detection data cannot be set with parameters. Use the SigmaWin+ to set the error detection data.

You cannot use the SigmaWin+ to set the error judgment levels. You can use only the parameters to set the error judgment levels.

(a) Number of Error Detection Points

Pn5C4 (25C4h)	Error Detection Sample Data Set 1 Warning Level 1			Speed Pos Trq
	Setting Range	Setting Unit	Default Setting	When Enabled
	0 to 10000	0.01%	2000	Immediately
Pn5C6 (25C6h)	Error Detection Sample Data Set 1 Warning Level 2			Speed Pos Trq
	Setting Range	Setting Unit	Default Setting	When Enabled
	0 to 10000	0.01%	2000	Immediately
Pn5C8 (25C8h)	Error Detection Sample Data Set 2 Warning Level 1			Speed Pos Trq
	Setting Range	Setting Unit	Default Setting	When Enabled
	0 to 10000	0.01%	2000	Immediately
Pn5CA (25CAh)	Error Detection Sample Data Set 2 Warning Level 2			Speed Pos Trq
	Setting Range	Setting Unit	Default Setting	When Enabled
	0 to 10000	0.01%	2000	Immediately

Information In the SigmaWin+, set error detection points, but with parameters, set error rate (level).

For example, to set the level for the torque reference data of sample data 1, configure the settings as shown below.

1. For [Error Detection Data: Data 1] in the SigmaWin+, set the torque reference data.
2. In Pn5C4 (Error Detection Sample Data Set 1 Warning Level 1), set the error rate for reference data.
   For example, to trigger A.905 when the error rate is 30%, set Pn5C4 to 3000.
   Or to no longer trigger A.905, set Pn5C4 to 10000.

(b) Error Judgment Level

It is normally not necessary to change the error judgment level, but it can be changed with parameters. The error judgment level cannot be changed in the SigmaWin+. The following table lists the related parameters for changing the error judgment level.

Pn5C5 (25C5h)	Error Detection Sample Data Set 1 Judgment Level 1			Speed Pos Trq
	Setting Range	Setting Unit	Default Setting	When Enabled
	0 to 10000	–	1520	Immediately
Pn5C7 (25C7h)	Error Detection Sample Data Set 1 Judgment Level 2			Speed Pos Trq
	Setting Range	Setting Unit	Default Setting	When Enabled
	0 to 10000	–	1520	Immediately
Pn5C9 (25C9h)	Error Detection Sample Data Set 2 Judgment Level 1			Speed Pos Trq
	Setting Range	Setting Unit	Default Setting	When Enabled
	0 to 10000	–	1520	Immediately
Pn5CB (25CBh)	Error Detection Sample Data Set 2 Judgment Level 2			Speed Pos Trq
	Setting Range	Setting Unit	Default Setting	When Enabled
	0 to 10000	–	1520	Immediately

The following table shows the relationship between the Mahalanobis distance and the parameters to set.

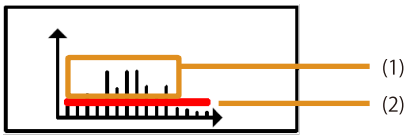

No.	Description	Parameter to Set
(1)	Set what percentage the judgment level should be exceeded in order to trigger A.905. This percentage is called the error rate, which can be calculated with the following equation. Error rate [%] = Number of samples that exceed the judgment level [count] / Number of samples of trace data [count]	Pn5C4 Pn5C6 Pn5C8 Pn5CA
(2)	Set the judgment level at which an error is judged. It is normally not necessary to change these settings from the default values.	Pn5C5 Pn5C7 Pn5C9 Pn5CB

9.6.4 Executing Error Detection

This section describes how to use error detection.

Information Refer to the following section for the preparations to use error detection.

☞ *9.6.3 Creating Sample Data and Setting the Error Judgment Baseline on page 519*

1. **Click the [Execute Error Detection] button in the SigmaWin+.**

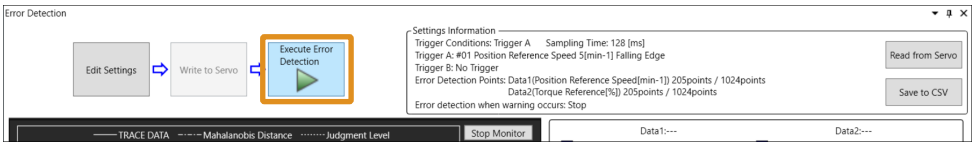

The message dialog box will be displayed.

2. **Click the [OK] button.**

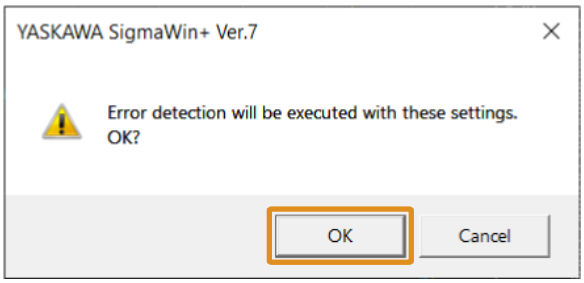

Another message dialog box will be displayed.

3. **Click the [OK] button.**

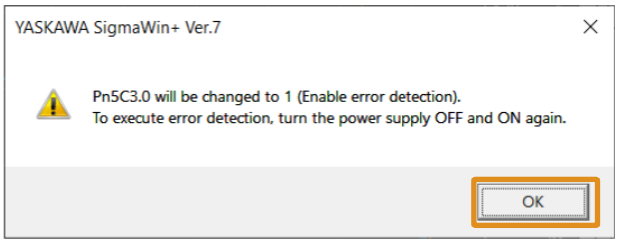

4. **Turn the power to the SERVOPACK OFF and ON again.**
5. **Run the machine and equipment as you would normally.**

The sample data and running trace data will be displayed.

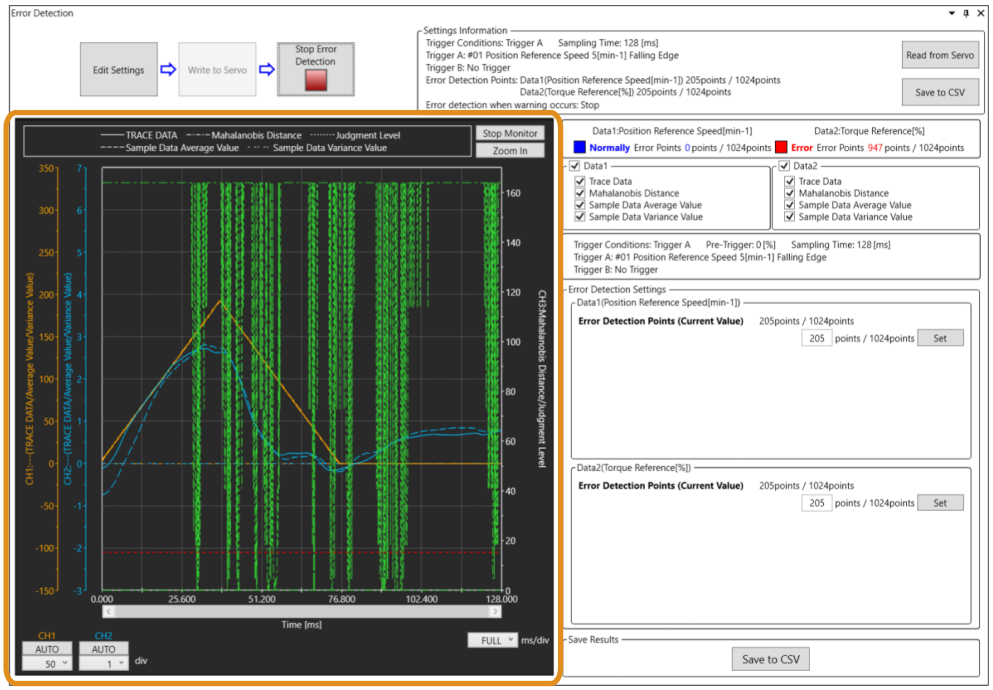

When an error is detected according to the set conditions and content, A.905 (Error Detection Warning) will occur.

Click the [Save to CSV] button to save the on-screen data to a CSV file.

(1) Restrictions

- If the SERVOPACK software version is 0007 or later, use the SigmaWin+ Ver. 7.42 or later to use error detection.
- You cannot execute utility functions at the same time as error detection. Error detection will stop if you execute the following utility functions.

SigmaWin+		Digital Operator		Reference
Button in [Menu] Window	SigmaWin+ Function Name	Fn No.	Utility Function Name	
Monitor	Trace	–	–	☞ *9.3 Monitoring Machine Operation Status and Signal Waveforms on page 506*
Tuning	Tuning - Moment of Inertia Ratio Settings - Execute	–	–	☞ *8.5 Moment of Inertia Estimation without a Host Reference on page 348*
Diagnostic	Mechanical Analysis	–	–	☞ *8.17.1 Mechanical Analysis on page 489*

10

Fully-Closed Loop Control

Provides detailed information on performing fully-closed loop control with the SERVOPACK.

10.1 Fully-Closed System 526

10.2 SERVOPACK Commissioning Procedure 527

10.3 Parameter Settings for Fully-Closed Loop Control 529

10.3.1 Parameters to Set and Reference Information 529

10.3.2 Control Block Diagram for Fully-Closed Loop Control 529

10.3.3 Setting the Motor Rotation Direction and the Machine Movement Direction 530

10.3.4 Setting the Number of External Encoder Scale Pitches 531

10.3.5 Setting the PAO, PBO, and PCO (Encoder Divided Pulse Output) Signals 531

10.3.6 External Absolute Encoder Data Reception Sequence 532

10.3.7 Setting Unit Systems 532

10.3.8 Alarm Detection Settings 532

10.3.9 Analog Monitor Signal Settings 533

10.3.10 Setting to Use an External Encoder for Speed Feedback 535

10.4 Monitoring an External Encoder 536

10.4.1 Option Module Required for Monitoring 536

10.4.2 Related Parameters 536

10.4.3 Monitoring the Current Value of the External Encoder from the Host Controller 536

10.4.4 Block Diagrams 536

10.1 Fully-Closed System

With a fully-closed system, an externally installed encoder is used to detect the position of the controlled machine and the machine's position information is fed back to the SERVOPACK. High-precision positioning is possible because the actual machine position is fed back directly. With a fully-closed system, looseness or twisting of mechanical parts may cause vibration or oscillation, resulting in unstable positioning.

Refer to the following manual for details on fully-closed modules.

Σ-X-Series Peripheral Device Selection Manual (Manual No.: SIEP C710812 12)

The following figure shows an example of the system configuration.

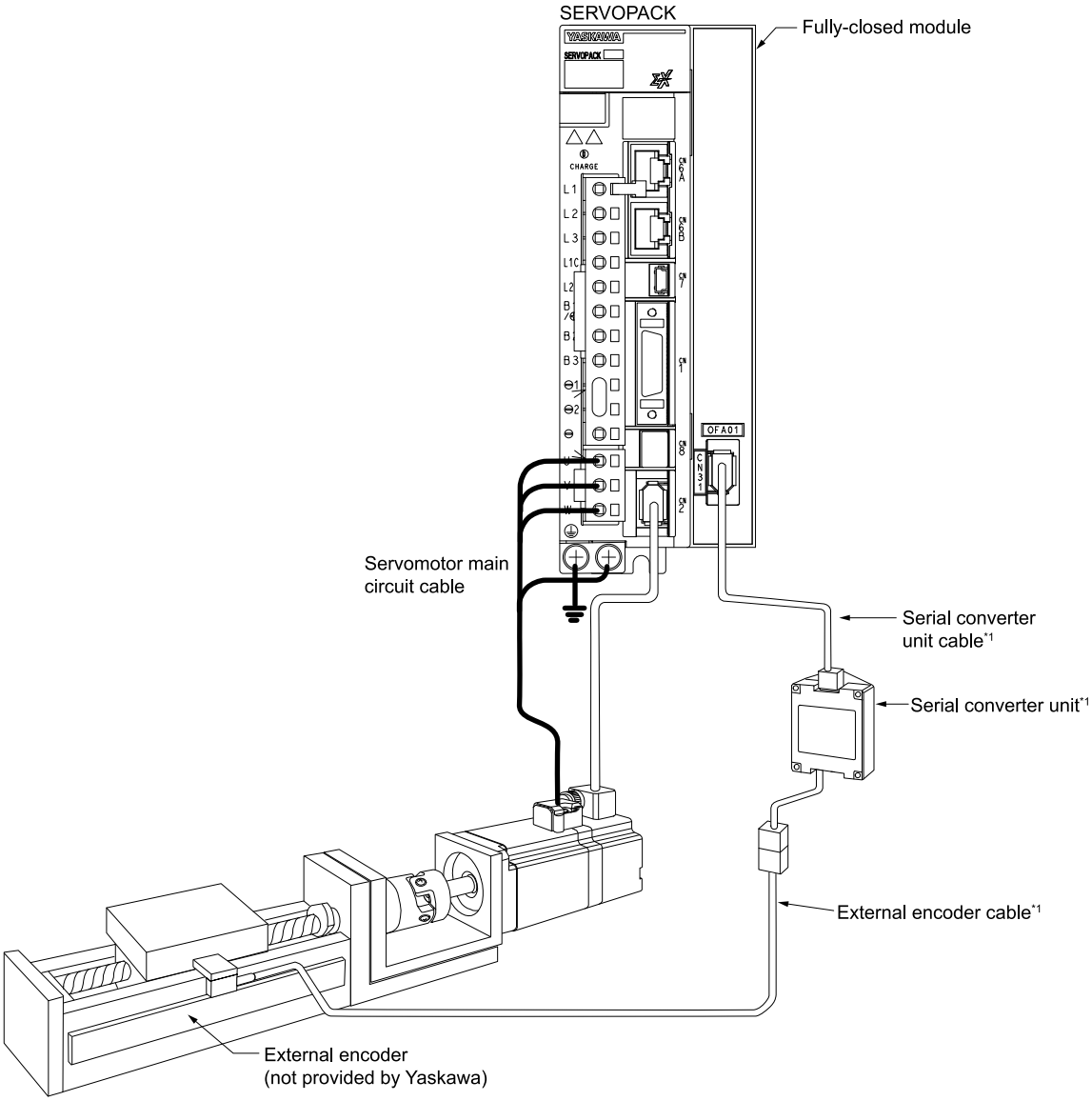

*1 The connected devices and cables depend on the type of external linear encoder that is used.

Note:

Refer to the following section for details on connections that are not shown above, such as connections to power supplies and peripheral devices.

2.4 Examples of Standard Connections between SERVOPACKs and Peripheral Devices on page 98

10.2 SERVOPACK Commissioning Procedure

First, confirm that the SERVOPACK operates correctly with semi-closed loop control, and then confirm that it operates correctly with fully-closed loop control.

The commissioning procedure for the SERVOPACK for fully-closed loop control is given below.

Step	Description	Operation	Required Parameter and Object Settings	Controlling Device
1	Check operation of the entire sequence with semi-closed loop control and without a load. Items to Check • Power supply circuit wiring • Servomotor wiring • Encoder wiring • Wiring of I/O signal lines from the host controller • Servomotor rotation direction, motor speed, and multiturn data • Operation of safety mechanisms, such as the holding brakes and the overtravel mechanisms	Set the parameters so that the SERVOPACK operates correctly in semi-closed loop control without a load and check the following points. Set Pn002 to n.0□□□ (do not use an external encoder) to specify semi-closed loop control. • Are there any errors in the SERVOPACK? • Does jogging operation function correctly when you operate the SERVOPACK without a load? • Do the I/O signals turn ON and OFF correctly? • Is power supplied to the servomotor when the Servo ON command (Enable Operation command) is sent from the host controller? • Does the servomotor operate correctly when a position reference is input by the host controller?	• Pn000 (Basic Function Selections 0) • Pn001 (Application Function Selections 1) • Pn002 = n.X□□□ (External Encoder Usage) • Position User Unit (2701h) (position reference unit) • Pn50A to Pn516 or Pn50A, Pn590 to Pn5BC (Input Signal Selections)	SERVOPACK or host controller
2	Check operation with the servomotor connected to the machine with semi-closed loop control. Items to Check • Initial response of the system connected to the machine • Movement direction, travel distance, and movement speed as specified by the references from the host controller	Connect the servomotor to the machine. Set the moment of inertia ratio in Pn103 using autotuning without a host reference. Check that the machine's movement direction, travel distance, and movement speed agree with the references from the host controller.	Pn103 (Moment of Inertia Ratio)	Host controller
3	Check the external encoder. Items to Check Is the signal from the external encoder received correctly?	Set the parameters related to fully-closed loop control and move the machine with your hand without turning ON the power to the servomotor. Check the following status with the digital operator or Sigma-Win+. • Does the fully-closed feedback pulse counter count up when the servomotor moves in the forward direction? • Is the travel distance of the machine visually about the same as the amount counted by the fully-closed feedback pulse counter? **Note:** The unit for the fully-closed feedback pulse counter is pulses, which is equivalent to the external encoder sine wave pitch.	• Pn002 = n.X□□□ (External Encoder Usage) • Pn20A (Number of External Encoder Scale Pitches) • Position User Unit (2701h) (position reference unit) • Pn281 (Encoder Output Resolution) • Pn51B (Motor-Load Position Deviation Overflow Detection Level) • Pn522 (Positioning Completed Width) • Pn52A (Multiplier per Fully-closed Rotation)	–

Continued on next page.

Continued from previous page.

Step	Description	Operation	Required Parameter and Object Settings	Controlling Device
4	Perform a program jogging. Items to Check Does the fully-closed system operate correctly for the SERVOPACK without a load?	Perform a program jogging and confirm that the travel distance is the same as the reference value in Pn531 (Program Jogging Travel Distance). When you perform program jogging, start from a low speed and gradually increase the speed.	Pn530 to Pn536 (program jogging-related parameters)	SERVOPACK
5	Operate the SERVOPACK. Items to Check Does the fully-closed system operate correctly, including the host controller?	Input a position reference and confirm that the SERVOPACK operates correctly. Start from a low speed and gradually increase the speed.	–	Host controller

10.3 Parameter Settings for Fully-Closed Loop Control

10.3.1 Parameters to Set and Reference Information

This section describes the parameter and object settings that are related to fully-closed loop control.

Parameter and Object to Set	Setting	Availability *1			Reference
		Position Control	Speed Control	Torque Control	
Pn000 (2000h) = n.□□□X	Motor rotation direction	○	○	○	☞ *10.3.3 Setting the Motor Rotation Direction and the Machine Movement Direction on page 530*
Pn002 (2002h) = n.X□□□	External encoder usage method	○	○	○	
Pn20A (220Ah)	Number of external encoder scale pitches	○	○	○	☞ *10.3.4 Setting the Number of External Encoder Scale Pitches on page 531*
Pn281 (2281h)	PAO, PBO, and PCO (Encoder Divided Pulse Output) signals from the SERVOPACK	○	○	○	☞ *10.3.5 Setting the PAO, PBO, and PCO (Encoder Divided Pulse Output) Signals on page 531*
–	External absolute encoder data reception sequence	○	○	○	☞ *6.9.4 Reading the Position Data from the Absolute Linear Encoder on page 271*
Position User Unit (2701h)	Position reference unit	○	–	–	☞ *5.14 Setting Unit Systems on page 209*
Pn51B (251Bh)	Motor-load position deviation overflow detection level	○	–	–	☞ *10.3.8 Alarm Detection Settings on page 532*
Pn52A (252Ah)	Multiplier per fully-closed rotation	○	–	–	
Pn006 (2006h)/Pn007 (2007h)	Analog monitor signal	○	○	○	☞ *10.3.9 Analog Monitor Signal Settings on page 533*
Pn22A (222Ah) = n.X□□□	Speed feedback method during fully-closed loop control	○	–	–	☞ *10.3.10 Setting to Use an External Encoder for Speed Feedback on page 535*

*1 ○: Can be set, –: Cannot be set

10.3.2 Control Block Diagram for Fully-Closed Loop Control

The control block diagram for fully-closed loop control is provided below.

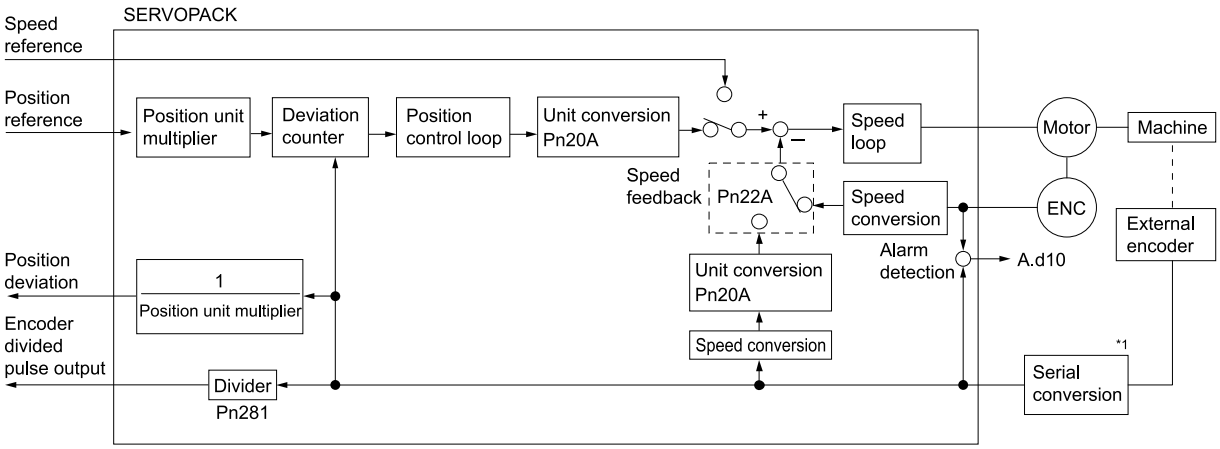

*1 The connected device depends on the type of external encoder.

Note:

You can use either an incremental or an absolute encoder. If you use an absolute encoder, set Pn002 to n.□1□□ (use the absolute encoder as an incremental encoder).

10.3.3 Setting the Motor Rotation Direction and the Machine Movement Direction

You must set the motor rotation direction and the machine movement direction. To perform fully-closed loop control, you must set the motor rotation direction with both Pn000 = n.□□□X (Rotation Direction Selection) and Pn002 = n.X□□□ (External Encoder Usage).

Parameter			Pn002 (2002h)= n.X□□□ (External Encoder Usage)			
			n.1□□□		n.3□□□	
Pn000 (2000h) = n.□□□X (Motor Direction Selection)	n.□□□0	Reference direction	Forward reference	Reverse reference	Forward reference	Reverse reference
		Motor rotation direction	CCW	CW	CCW	CW
		External encoder	Forward movement	Reverse movement	Reverse movement	Forward movement
	n.□□□1	Reference direction	Forward reference	Reverse reference	Forward reference	Reverse reference
		Motor rotation direction	CW	CCW	CW	CCW
		External encoder	Reverse movement	Forward movement	Forward movement	Reverse movement

- Phase B leads in the divided pulses for a forward reference regardless of the setting of Pn000 = n.□□□X.
- Forward direction: The direction in which the pulses are counted up.
- Reverse direction: The direction in which the pulses are counted down.

(1) Related Parameters

- Pn000 = n.□□□X
  Refer to the following section for details.
  ☞ *5.4 Motor Direction Setting on page 181*
- Pn002 = n.X□□□
  When you perform fully-closed loop control, set Pn002 to n.1□□□ or n.3□□□.

		External Encoder Usage (Speed, Pos, Trq)		When Enabled
Pn002 (2002h)	n.X□□□	0 (Default)	Do not use an external encoder.	After restart
		1	The external encoder moves in the forward direction for CCW motor rotation.	
		2	Reserved (Do not use.)	
		3	The external encoder moves in the reverse direction for CCW motor rotation.	
		4	Reserved (Do not use.)	

Information

Determine the setting of Pn002 = n.X□□□ as described below.

1. Set Pn000 to n.□□□0 (use the direction in which the linear encoder counts up as the forward direction) and set Pn002 to n.1□□□ (the external encoder moves in the forward direction for CCW motor rotation).
2. Manually rotate the motor shaft counterclockwise.
3. If the fully-closed feedback pulse counter counts up, do not change the setting of Pn002 (Pn002 = n.1□□□).
   If the fully-closed feedback pulse counter counts down, set Pn002 to n.3□□□.

10.3.4 Setting the Number of External Encoder Scale Pitches

Set the number of external encoder scale pitches per servomotor rotation in Pn20A.

(1) Setting Example

Specifications

- External encoder scale pitch: 20 μm
- Ball screw lead: 30 mm

If the external encoder is connected directly to the servomotor, the setting will be 1500 (30 mm/0.02 mm = 1500).

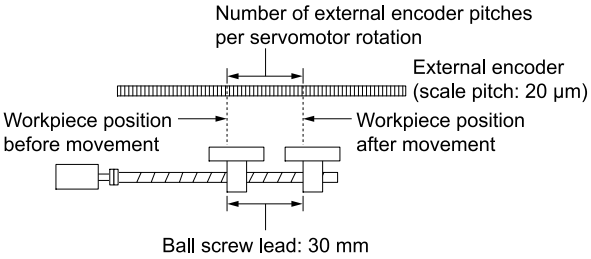

Note:

1. If there is a fraction, round off the digits below the decimal point.
2. If the number of external encoder scale pitches per servomotor rotation is not an integer, there will be deviation in the position loop gain (Kp), feedforward, and position reference speed monitor. This is not relevant for the position loop and it therefore does not interfere with the position accuracy.

(2) Related Parameters

	Number of External Encoder Scale Pitches (Speed, Pos, Trq)			
Pn20A (220Ah)	Setting Range	Setting Unit	Default Setting	When Enabled
	4 to 1048576	1 scale pitch/revolution	32768	After restart

10.3.5 Setting the PAO, PBO, and PCO (Encoder Divided Pulse Output) Signals

Set the position resolution in Pn281 (Encoder Output Resolution).

Enter the number of phase A and phase B edges for the setting.

(1) Setting Example

Specifications

- External encoder scale pitch: 20 μm

- Ball screw lead: 30 mm
- Speed:1600 mm/s

If a single pulse (multiplied by 4) is output for 1 µm, the setting would be 20.

If a single pulse (multiplied by 4) is output for 0.5 µm, the setting would be 40.

The encoder divided pulse output would have the following waveform if the setting is 20.

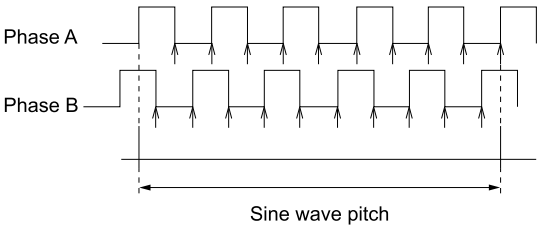

"↑" indicates the edge positions. In this example, the set value is 20 and therefore the number of edges is 20.

Note:

The upper limit of the encoder signal output frequency (multiplied by 4) is 6.4 Mpps. Do not set a value that would cause the output to exceed 6.4 Mpps. If the output exceeds the upper limit, an A.511 alarm (Encoder Output Pulse Overspeed) will be output.

Information: If the setting is 20 and the speed is 1600 mm/s, the output frequency would be 1600 mm/s /0.001 mm = 1600000 = 1.6 Mpps.

Because 1.6 Mpps is less than 6.4 Mpps, this setting can be used.

(2) Related Parameters

Pn281 (2281h)	Encoder Output Resolution			Speed Pos Trq
	Setting Range	Setting Unit	Default Setting	When Enabled
	1 to 4096	1 edge/pitch	20	After restart

Note:

- The maximum setting for the encoder output resolution is 4096. If the resolution of the external encoder exceeds 4096, pulse output will no longer be possible at the resolution given in the following section.
  ☞ ◆ *Feedback Resolution of Linear Encoder: Incremental Linear Encoder on page 211*
  ☞ ◆ *Feedback Resolution of Linear Encoder: Absolute Linear Encoder on page 212*
- If the setting of Pn281 exceeds the resolution of the external encoder, an A.041 alarm (Encoder Output Pulse Setting Error) will be output.

10.3.6 External Absolute Encoder Data Reception Sequence

Refer to the following sections for details.

☞ *6.9.4 Reading the Position Data from the Absolute Linear Encoder on page 271*

With fully-closed loop control, the same sequence as for a linear servomotor is used.

10.3.7 Setting Unit Systems

Refer to the following section for details.

☞ *5.14 Setting Unit Systems on page 209*

With fully-closed loop control, the same setting as for a linear servomotor is used.

10.3.8 Alarm Detection Settings

This section describes the parameters related to alarm detection settings (Pn51B and Pn52A).

(1) Pn51B (Motor-Load Position Deviation Overflow Detection Level)

This setting is used to detect the difference between the feedback position of the servomotor encoder and the feedback load position of the external encoder for fully-closed loop control. If the detected difference exceeds the setting, an A.d10 alarm (Motor-Load Position Deviation Overflow) will be output.

Pn51B (251Bh)	Motor-Load Position Deviation Overflow Detection Level			Speed Pos Trq
	Setting Range	Setting Unit	Default Setting	When Enabled
	0 to 1073741824	1 reference unit	1000	Immediately

Note:

If you set this parameter to 0, A.d10 alarms will not be output and the machine may be damaged.

(2) Pn52A (Multiplier per Fully-closed Rotation)

Set the coefficient of the deviation between the servomotor and the external encoder per servomotor rotation. This setting can be used to prevent the servomotor from running out of control due to damage to the external encoder or to detect belt slippage.

(a) Setting Example

Increase the value if the belt slips or is twisted excessively.

If this parameter is set to 0, the external encoder value will be read as it is.

If you use the default setting of 20, the second rotation will start with the deviation for the first motor rotation multiplied by 0.8.

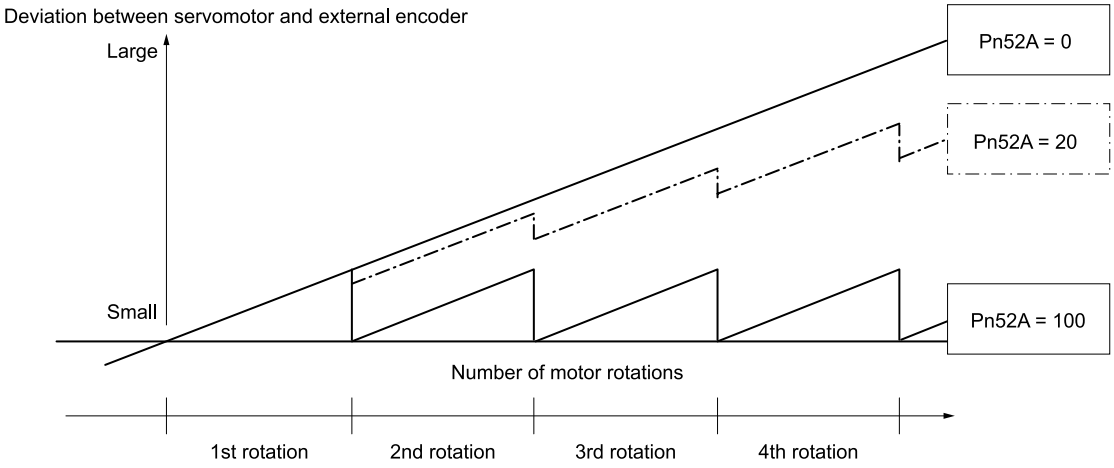

(b) Related Parameters

Pn52A (252Ah)	Multiplier per Fully-closed Rotation			Speed Pos Trq
	Setting Range	Setting Unit	Default Setting	When Enabled
	0 to 100	1%	20	Immediately

10.3.9 Analog Monitor Signal Settings

You can monitor the position deviation between the servomotor and load with an analog monitor.

		Analog Monitor 1 Signal Selection Speed Pos Trq		When Enabled
Pn006 (2006h)	n.□□XX	00	Motor speed (1 V/1000 min^{-1}) Motor speed (1 V/1000 mm/s)	Immediately
		01	Speed reference (1 V/1000 min^{-1}) Speed reference (1 V/1000 mm/s)	
		02 Default	Torque reference (1 V/100% rated torque) Force reference (1 V/100% rated force)	
		03	Position deviation (0.05 V/reference unit)	
		04	Position amplifier deviation (after electronic gear) (0.05 V/encoder pulse unit) Position amplifier deviation (after electronic gear) (0.05 V/linear encoder pulse unit)	
		05	Position reference speed (1 V/1000 min^{-1}) Position reference speed (1 V/1000 mm/s)	
		06	Reserved (Do not use.)	
		07	Position deviation between motor and load (0.01 V/reference unit)	
		08	Positioning completion (positioning completed: 5 V, positioning not completed: 0 V)	
		09	Speed feedforward (1 V/1000 min^{-1}) Speed feedforward (1 V/1000 mm/s)	
		0A	Torque feedforward (1 V/100% rated torque) Force feedforward (1 V/100% rated force)	
		0B	Active gain (gain 1: 1 V, gain 2: 2 V, gain 3: 3 V, gain 4: 4 V)	
		0C	Completion of position reference distribution (completed: 5 V, not completed: 0 V)	
		0D	External encoder speed (1 V/1000 min^{-1}: value at the motor shaft)	
		0E	Reserved (Do not use.)	
		0F	Reserved (Do not use.)	
		10	Main circuit DC voltage	
		11 to 12	Reserved (Do not use.)	
		13	Position deviation after position reference filter (0.05 V/reference unit)	
		14 to 5F	Reserved (Do not use.)	

		Analog Monitor 2 Signal Selection Speed Pos Trq		When Enabled
Pn007 (2007h)	n.□□XX	00 Default	Motor speed (1 V/1000 min^{-1}) Motor speed (1 V/1000 mm/s)	Immediately
		01	Speed reference (1 V/1000 min^{-1}) Speed reference (1 V/1000 mm/s)	
		02	Torque reference (1 V/100% rated torque) Force reference (1 V/100% rated force)	
		03	Position deviation (0.05 V/reference unit)	
		04	Position amplifier deviation (after electronic gear) (0.05 V/encoder pulse unit) Position amplifier deviation (after electronic gear) (0.05 V/linear encoder pulse unit)	
		05	Position reference speed (1 V/1000 min^{-1}) Position reference speed (1 V/1000 mm/s)	
		06	Reserved (Do not use.)	
		07	Position deviation between motor and load (0.01 V/reference unit)	
		08	Positioning completion (positioning completed: 5 V, positioning not completed: 0 V)	
		09	Speed feedforward (1 V/1000 min^{-1}) Speed feedforward (1 V/1000 mm/s)	
		0A	Torque feedforward (1 V/100% rated torque) Force feedforward (1 V/100% rated force)	
		0B	Active gain (gain 1: 1 V, gain 2: 2 V, gain 3: 3 V, gain 4: 4 V)	
		0C	Completion of position reference distribution (completed: 5 V, not completed: 0 V)	
		0D	External encoder speed (1 V/1000 min^{-1}: value at the motor shaft)	
		0E	Reserved (Do not use.)	
		0F	Reserved (Do not use.)	
		10	Main circuit DC voltage	
		11 to 5F	Reserved (Do not use.)	

10.3.10 Setting to Use an External Encoder for Speed Feedback

For fully-closed loop control, you normally set Pn22A to n.0□□□ (use motor encoder speed). If you will use a direct drive servomotor and a high-resolution external encoder, set Pn22A to n.1□□□ (use external encoder speed).

		Fully-closed Control Speed Feedback Selection Speed Pos Trq		When Enabled
Pn22A (222Ah)	n.X□□□	0 Default	Use motor encoder speed.	After restart
		1	Use external encoder speed.	

Note:

This parameter cannot be used if Pn002 is set to n.0□□□ (do not use external encoder).

10.4 Monitoring an External Encoder

You can monitor the current value of an external encoder attached to a machine without creating a fully-closed loop.

A dual encoder system with an encoder in the rotary servomotor and an external encoder attached to the machine is used, but only the encoder in the rotary servomotor is used in the control loop.

The external encoder is used only to monitor the current position of the machine.

You can also use a touch probe to latch the current position of an external encoder.

10.4.1 Option Module Required for Monitoring

A fully-closed module (SGDV-OFA01A) is required to use this function. Refer to the following manual for detailed information on installation.

Σ-V-Series/Σ-V-Series for Large-Capacity Models/Σ-7-Series/Σ-X-Series Installation Guide Fully-closed Module (Manual No.: TOBP C720829 03)

10.4.2 Related Parameters

The parameter for using the external encoder as the current value monitor of the machine is shown below.

		External Encoder Monitor Usage Speed Pos Trq		When Enabled
Pn00E (200Eh)	n.X□□□	0 Default	Do not use an external encoder monitor.	After restart
		1	Use CCW as the forward direction.	
		2	Reserved (Do not use.)	
		3	Use CW as the forward direction.	
		4	Reserved (Do not use.)	

Fully-closed loop control is not used, so set Pn002 to n.0□□□ (do not use external encoder).

10.4.3 Monitoring the Current Value of the External Encoder from the Host Controller

To check the current value of the external encoder from the host controller, set the following object.

Index	Subindex	Name	Data Type	Access	PDO Mapping	Value	Saving to EEPROM
60E4h	0	Number of entries	USINT	RO	No	1	No
	1	External encoder position	DINT	RO	Yes	0 [inc]	Yes

10.4.4 Block Diagrams

A simple block diagram is given below to provide an overall image of monitoring an external encoder.

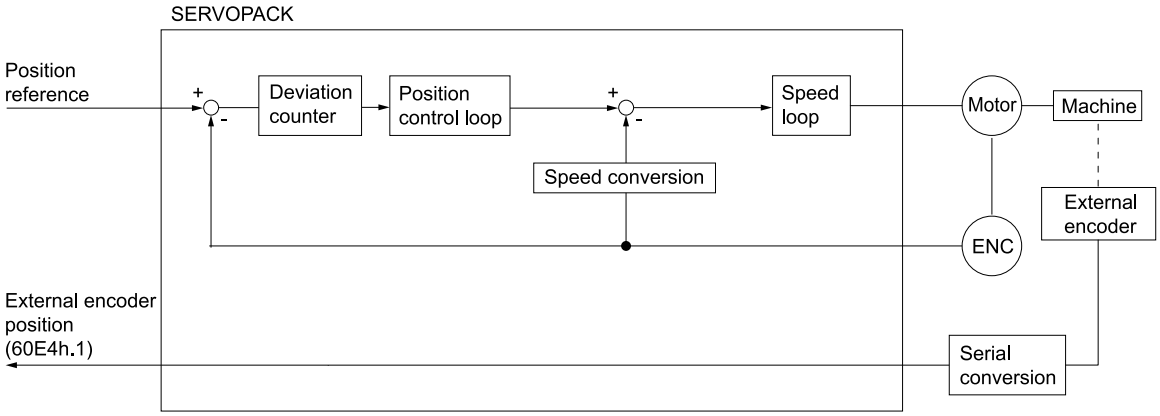

The following block diagram shows monitoring an external encoder in the Profile Position Mode.

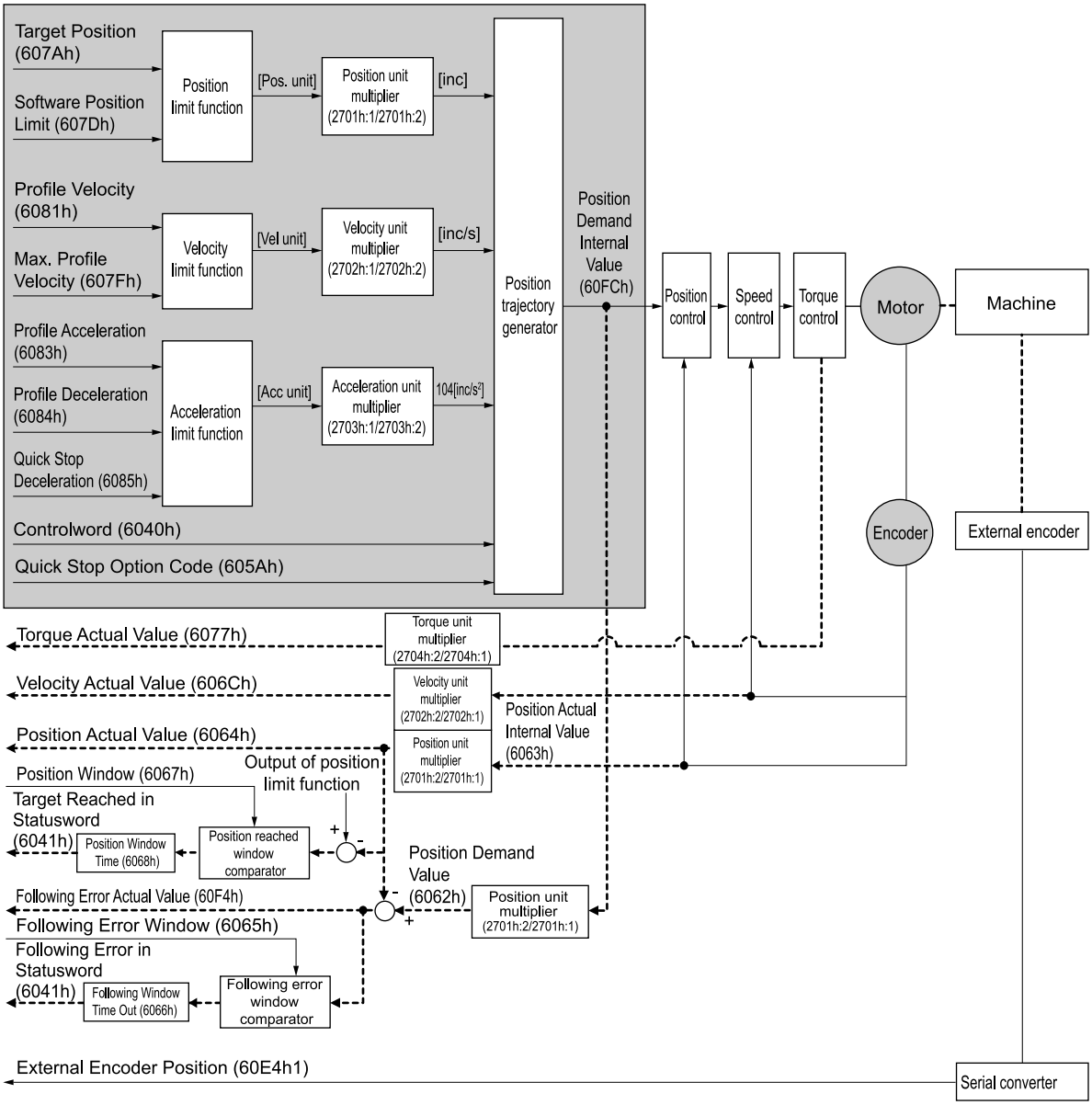

11

Σ-LINK II Function

Provides detailed information on the Σ-LINK II functions of the SERVOPACK.

11.1 Outline 540

11.2 Devices That Support Σ-LINK II 541

11.3 Procedure to Use Σ-LINK II 542

11.4 Connecting Devices to the SERVOPACK 544

11.4.1 Using a Direct Connection between the SERVOPACK and Servomotor 544

11.4.2 Connecting Multiple Devices to the SERVOPACK 544

11.5 Performing Self-Configuration 545

11.5.1 Preparations 545

11.5.2 Applicable Tools 545

11.5.3 Operating Procedure 545

11.5.4 Troubleshooting If an Error Code Is Displayed 547

11.6 Specifying the Servomotor (Semi-Closed Encoder) to Drive 550

11.6.1 Operating Procedure 550

11.7 Configuring the Σ-LINK II Data Settings 552

11.7.1 Monitoring the Input Signals of Connected Devices with the Sigma-Win+ 552

11.7.2 Monitoring the Input Signals of Connected Devices from the Host Controller 555

11.7.3 Allocating Input Signals of Connected Devices to SERVOPACK Functions and Using those Signals 555

11.7.4 Configuring Settings to Output Signals from Connected Devices 560

11.8 Changing Detection Conditions of Alarms Related to Σ-LINK II 565

11.8.1 Connected Node Change Detection Condition 565

11.8.2 Σ-LINK II I/O Device Error Detection Selection 565

11.1 Outline

Σ-LINK II is a protocol used for communications between the SERVOPACK and encoder.

The Σ-X Series now allows you to connect multiple devices to the SERVOPACK.

In addition to the encoder, you can also connected sensors and I/O devices installed on the machine end. You can also use a Yaskawa sensor hub (model number: JUSP-SL2H□) to connect devices that do not support Σ-LINK II to the SERVOPACK.

The SERVOPACK collects data from the devices. This collected data can be monitored by the host controller and allocated to signals and used for SERVOPACK functions.

You may need to perform configuration using the SigmaWin+ to enable Σ-LINK II. You may also need to configure settings to monitor the data of connected devices and to configure settings to allocate signals to SERVOPACK functions.

11.2 Devices That Support Σ-LINK II

The following table lists devices that support Σ-LINK II.

Classification	Product	Product Name	Model
Encoder	Servomotor (Semi-closed encoder)	Σ-X-series rotary servomotors Ancillary specification: Standard	SGMX□-□□□□□□□□1
	External Encoder *1 (Fully-closed encoder)	–	–
I/O Device	Sensor hub	Σ-LINK II sensor hub	JUSP-SL2H□

*1 Currently in development

Important

Σ-X-series rotary servomotors (model: SGMX□-□□□□□□□□2) with Σ-7 compatibility cannot use Σ-LINK II.

11.3 Procedure to Use Σ-LINK II

The following table gives the flow and references to use Σ-LINK II.

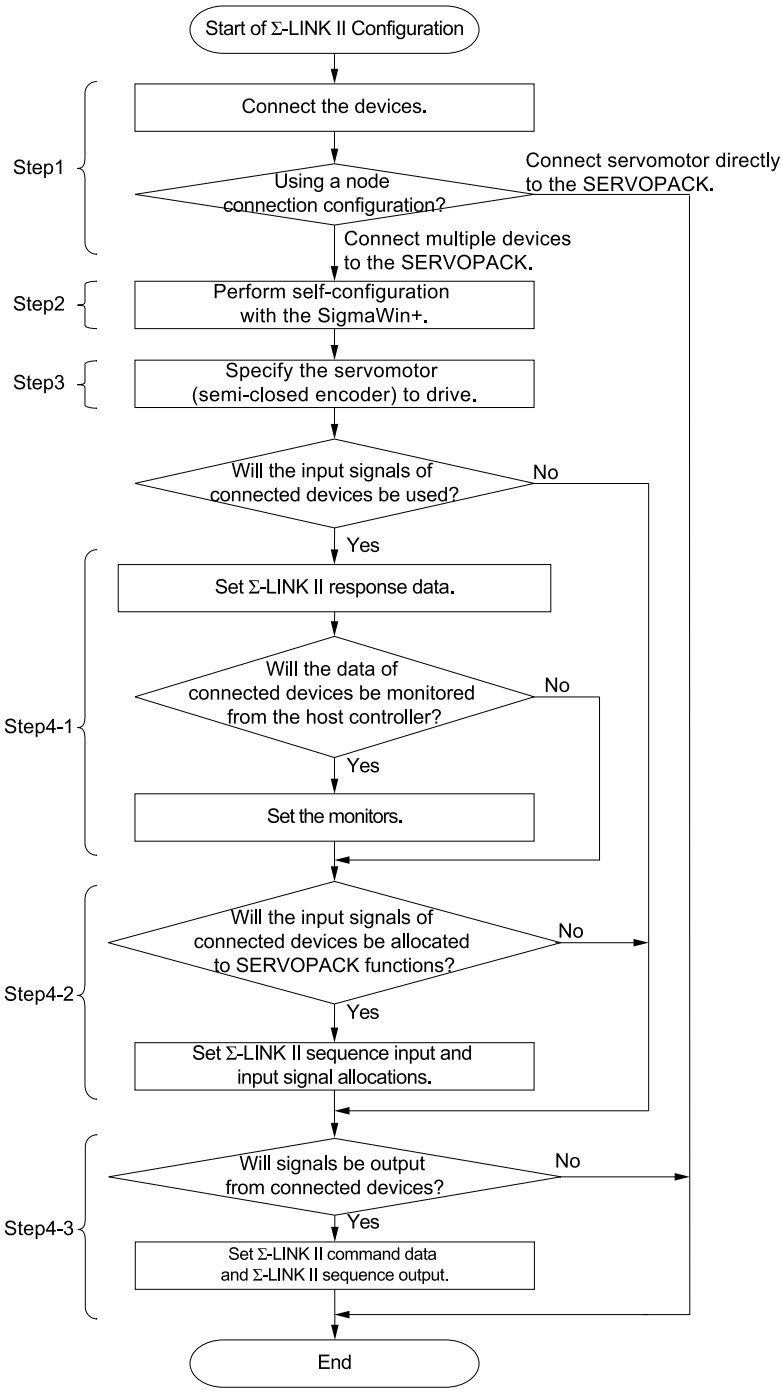

Step	Item	Reference
1	Connecting Devices to the SERVOPACK	☞ *11.2 Devices That Support Σ-LINK II on page 541* ☞ *11.4 Connecting Devices to the SERVOPACK on page 544*
2	Performing Self-Configuration with the SigmaWin+	☞ *11.5 Performing Self-Configuration on page 545*
3	Specifying the Servomotor (Semi-Closed Encoder) to Drive	☞ *11.6 Specifying the Servomotor (Semi-Closed Encoder) to Drive on page 550*
4	Configuring the Σ-LINK II Data Settings	–

Continued on next page.

Continued from previous page.

Step		Item	Reference
	4-1	Monitoring the Input Signals of Connected Devices	☞ *11.7.1 Monitoring the Input Signals of Connected Devices with the SigmaWin+ on page 552* ☞ *11.7.2 Monitoring the Input Signals of Connected Devices from the Host Controller on page 555*
	4-2	Allocating Input Signals of Connected Devices to SERVOPACK Functions and Using those Signals Information This function can be used only when a digital I/O type sensor hub is connected.	☞ *11.7.3 Allocating Input Signals of Connected Devices to SERVOPACK Functions and Using those Signals on page 555*
	4-3	Outputting Signals from Connected Devices	☞ *11.7.4 Configuring Settings to Output Signals from Connected Devices on page 560*

Term

Self-configuration :

Self-configuration is a function that automatically identifies the devices connected over Σ-LINK II. Perform self-configuration from the SigmaWin+. You must perform self-configuration only when you connect multiple devices to the SERVOPACK.

11.4 Connecting Devices to the SERVOPACK

This section describes about when using a direction connection between the SERVOPACK and servomotor and when connecting multiple devices to the SERVOPACK.

11.4.1 Using a Direct Connection between the SERVOPACK and Servomotor

Equipment Configuration	Remarks
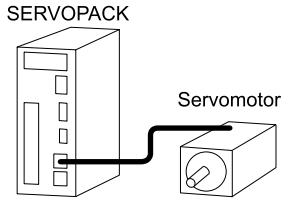	Setup is not required to enable Σ-LINK II.

11.4.2 Connecting Multiple Devices to the SERVOPACK

You can connect a maximum of three Σ-LINK-II-compatible devices to the SERVOPACK, but only two of those connections can be devices that detect position (e.g., a servomotor and external encoder).

> **Important**
> There are limitations on the maximum cable length when connecting multiple devices to the SERVOPACK. Refer to the following manual for details.
> Σ-X-Series Peripheral Device Selection Manual (Manual No.: SIEP C710812 12)

Equipment Configuration	Remarks
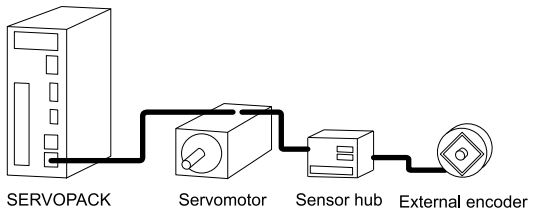	• Setup is required to enable Σ-LINK II. Refer to the following section for details on the settings. ☞ *11.5 Performing Self-Configuration on page 545* • Devices can be connected in any order.

11.5 Performing Self-Configuration

Perform self-configuration to identify the devices connected over Σ-LINK II. Use the SigmaWin+ to perform self-configuration. When you perform self-configuration, the connected devices will be automatically identified and those results will be saved in the SERVOPACK.

If a node or connection configuration is detected after restart that differs from the saved results, A.Cd4 (Sigma-LINK II Node Change Detected) will occur.

Information

- If you change the configuration of devices connected over Σ-LINK II after the self-configuration results are saved, execute self-configuration again or discard the self-configuration data. To discard the self-configuration data, click the [Discard Settings] button on the [SigmaLINK II Settings] window.
- If you use a direct connection between the SERVOPACK and servomotor, self-configuration is not required. However, if you switch to a direct connection between the SERVOPACK and servomotor after the self-configuration results are saved, execute self-configuration again or discard the self-configuration results data.
- When you connect a sensor hub, additional setup procedures are required. After you configure these settings, perform procedures shown in the following section.
  ☞ *11.7.3 Allocating Input Signals of Connected Devices to SERVOPACK Functions and Using those Signals on page 555*
  ☞ *11.7.4 Configuring Settings to Output Signals from Connected Devices on page 560*
- If the node detection time is short, a timeout may occur and the correct results may not be obtained. In this case, increase the setting of Pn589 (SigmaLINK II Node Detection Time).

11.5.1 Preparations

Always check the following before you perform Σ-LINK II configuration.

- Utility functions must not be running.
  Refer to the following section for details on utility functions.
  ☞ *18.3.1 Corresponding SERVOPACK Utility Function Names on page 862*
- The servo must not be ON.

11.5.2 Applicable Tools

The following table lists the tools that you can use to perform Σ-LINK II configuration.

Tool	Fn No./Function Name	Reference
Digital Operator	You cannot perform Σ-LINK II configuration from the digital operator.	
SigmaWin+	[Σ-LINK II Setting]	🕮 Engineering Tool SigmaWin+ Operation Manual (Manual No.: SIET S800001 34)

11.5.3 Operating Procedure

This section gives the operation procedure for Σ-LINK II self-configuration.

1. **First connect all Σ-LINK II devices, and then start an online connection to the SERVOPACK with the SigmaWin+.**
2. **Click the [ ] button for the servo drive in the workspace of the Main Window of the SigmaWin+.**

   The [Menu] window will be displayed.

3. **Click [SigmaLINK II Setting] in the [Basic Functions] area.**

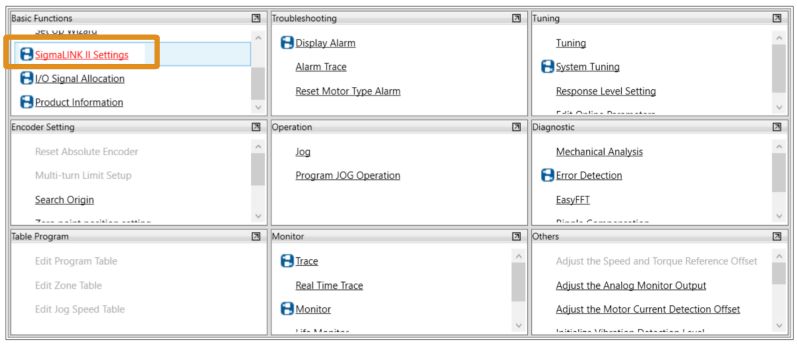

The [SigmaLINK II Communications Settings] window will be displayed.

4. **Click the [Execute] button.**

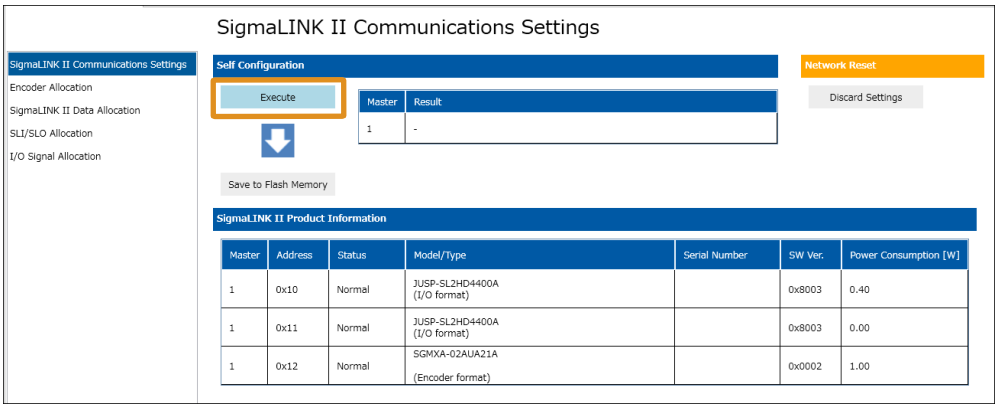

Information
- Click the [Discard Settings] button to discard the self-configuration results.
- If an error code is displayed, refer to the following section.
  ☞ *11.5.4 Troubleshooting If an Error Code Is Displayed on page 547*

The message dialog box will be displayed.

5. **Click the [Yes] button.**

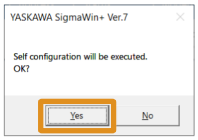

Another dialog box will be displayed.

6. **Click the [OK] button.**

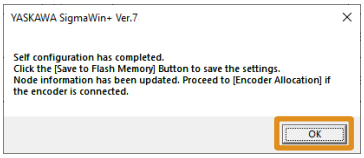

The devices connected to CN2 will be automatically detected, and the connected device information will be displayed at the bottom of the window.

7. **Check the information that was automatically detected. If there are no problems with the information, click the [Save to Flash Memory] button.**

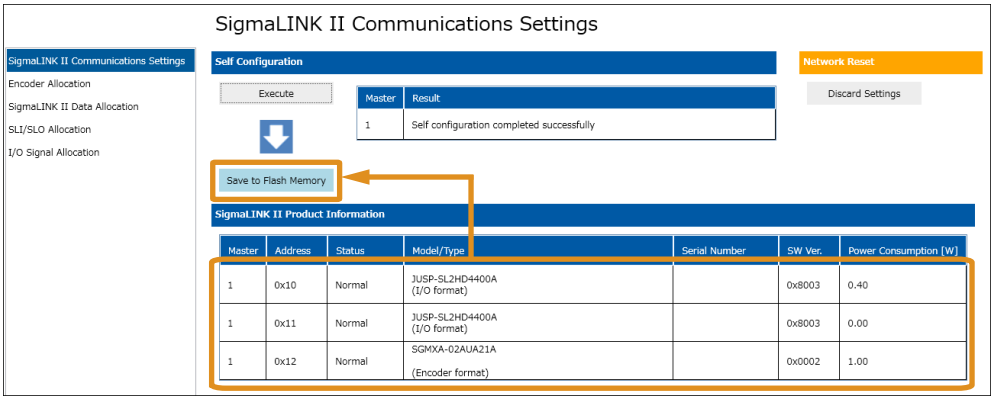

The message dialog box will be displayed.

8. **Click the [Yes] button.**

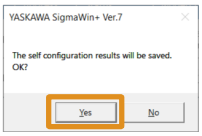

Another dialog box will be displayed.

9. **Click the [OK] button.**

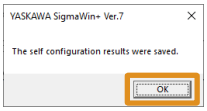

The self-configuration results will be saved in the SERVOPACK.

This concludes the procedure.

11.5.4 Troubleshooting If an Error Code Is Displayed

If an error code is displayed when starting the [SigmaLINK II Communications Settings] window in the SigmaWin+ or when Σ-LINK II self-configuration was executed, resolve the error based on the following information.

Error Code	Item	Possible Cause	Confirmation	Correction
0x0011	Node Combination Error	The SERVOPACK exceeded the upper limit of Σ-LINK II nodes that can be connected.	Check the number of nodes that can be connected. For the number of nodes that can be connected, refer to Peripheral Device Selection Manual (Manual No.: SIEP C710812 12).	Review the device configuration and set it to the number of nodes that can be connected.
		The content saved in the configuration and the content detected in node detection are different.	Check the content that was saved with self-configuration and the actual device connections.	If the actual device configuration is correct, execute self-configuration again. If the content that was saved with self-configuration is correct, change the actual device configuration to match the saved content.
		A sensor hub is connected that exceeds the number of connections supported by the SERVOPACK.	Check the total number of sensor hub connections.	Keep the total number of sensor hub connections to within two nodes.
0x0013	Excessive Total Power Consumption	The total power consumption of the nodes connected to one connector exceeded 3.5 W.	Check the total power consumption of the nodes connected to one connector.	• Use a booster unit. • Review the connection configuration so that total power consumption does not exceed the specified value. For the connection configuration, refer to Peripheral Device Selection Manual (Manual No.: SIEP C710812 12).

Continued on next page.

Continued from previous page.

Error Code	Item	Possible Cause	Confirmation	Correction
0x0070	Slave Communications Error	A timeout occurred while detecting nodes.	Compare the number of detected nodes displayed on the window and the actual number of connected nodes.	If the number of detected nodes displayed on the window is lower than the actual number of connected nodes, make the set value for Pn589 (Σ-LINK II Node Detection Time) larger, turn the power OFF and ON, and execute self-configuration again.
		There is a faulty contact in the connector or the connector is not wired correctly for the encoder cable.	Check the condition of the connector for encoder cable.	Reconnect the connector for encoder cable and check the encoder wiring.
		There is a cable disconnection or shortcircuit in the encoder. Or, the cable impedance is outside the specified values.	Check the condition of the encoder cable.	Use the encoder cable within the specified specifications.
		The power supplied to nodes is insufficient due to the voltage drop from the length of the cable.	Check if the length of each cable is within the specified cable length. For the specified cable lengths, refer to Peripheral Device Selection Manual (Manual No.: SIEP C710812 12).	• Use a booster unit. • Change the length of each cable to the specified cable length.
		One of the following has occurred: corrosion caused by improper temperature, humidity, or gas, a short-circuit caused by entry of water drops or cutting oil, or faulty contact in connector caused by vibration.	Check the operating environment.	Improve the operating environment, and replace the cable. If the alarm still occurs, replace the SERVOPACK.
		A malfunction was caused by noise.	–	Correct the wiring around the encoder by separating the encoder cable from the servomotor main circuit cable or by grounding the encoder.
		A failure occurred in the SERVOPACK.	–	If normal communications are possible after replacing the SERVOPACK with a different SERVOPACK, the SERVOPACK may be faulty. Replace the SERVOPACK.
0xFFFF	System Error	A system error occurred in the SERVOPACK.	–	If normal communications are possible after replacing the SERVOPACK with a different SERVOPACK, the SERVOPACK may be faulty. Replace the SERVOPACK.

11.6 Specifying the Servomotor (Semi-Closed Encoder) to Drive

The SERVOPACK cannot determine which device at what node address to drive by executing self-configuration only. For this reason, you must specify the node address of the servomotor for the SERVOPACK to drive and save that node address in the SERVOPACK.

You will use the SigmaWin+ to configure these settings.

Term

Node Address :

A node address is a unique number that identifies a device connected over Σ-LINK II.

Important

If you do not set the node address of the servomotor (semi-closed encoder) to drive correctly, an A.C90 alarm (Encoder Communications Error) will occur.

Information

You can also use parameters to specify the servomotor (semi-closed encoder) to drive. The following table lists the related parameters.

Pn0DA (20DAh)	n.□□XX	Node Address	Speed Pos Trq	When Enabled
		00 to 1E	Select an encoder with a node address between 00h and 1Eh.	After restart

For example, set Pn0DA to 0012h for Node 3.

11.6.1 Operating Procedure

Use the following procedure to specify the motor (semi-closed encoder) to drive.

1. **Click [Encoder Allocation] on the [SigmaLINK II Settings] window.**

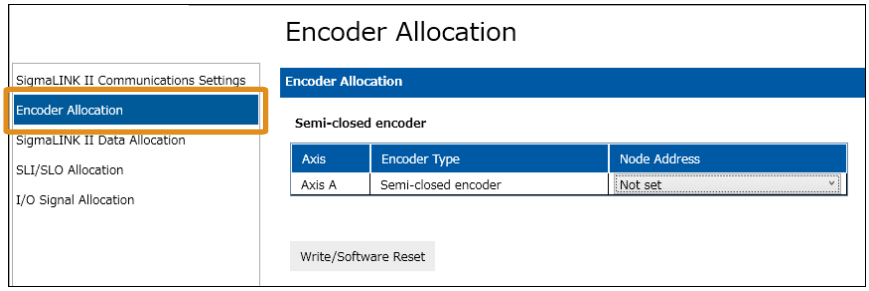

The display of the [SigmaLINK II Communications Settings] area will be changed.

2. **Set the node address of the servomotor to be driven by the SERVOPACK.**

Refer to the following section for details on node address.

☞ *11.6 Specifying the Servomotor (Semi-Closed Encoder) to Drive on page 550*

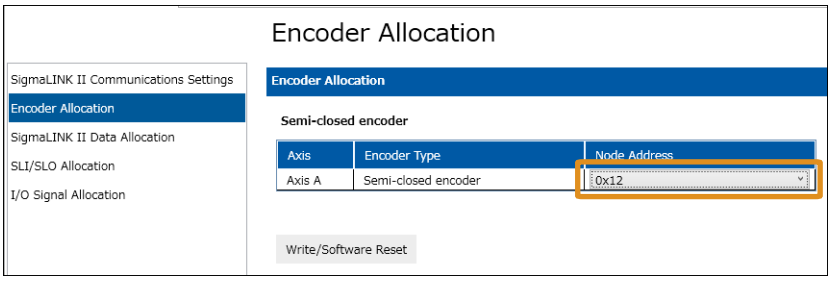

3. **Click the [Write/Software Reset] button.**

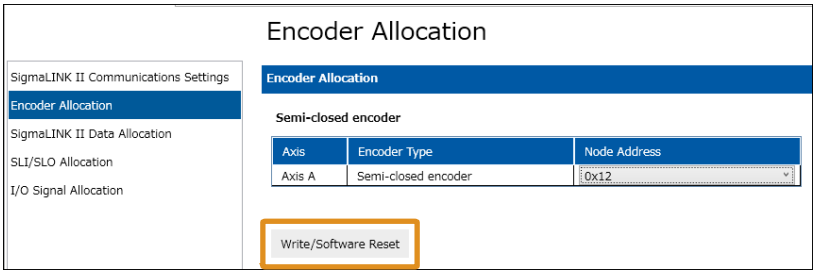

The message dialog box will be displayed.

4. **Click the [Yes] button.**

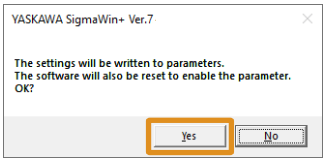

After the software is reset, the node address of the motor to be driven by the SERVOPACK will be saved to the SERVOPACK and another message dialog box will be displayed.

5. **Click the [OK] button.**

This concludes the procedure.

11.7 Configuring the Σ-LINK II Data Settings

You can accomplish the following by using Σ-LINK II functions.

- Monitoring the Input Signals of Connected Devices
- Allocating Input Signals of Connected Devices to SERVOPACK Functions and Using those Signals
- Outputting Signals from Connected Devices

To accomplish this, the Σ-LINK II data input from Σ-LINK II peripheral devices or output to Σ-LINK II peripheral devices must be associated with data inside the SERVOPACK. You will use the SigmaWin+ to configure these settings.

The following figure shows an image of the content to set.

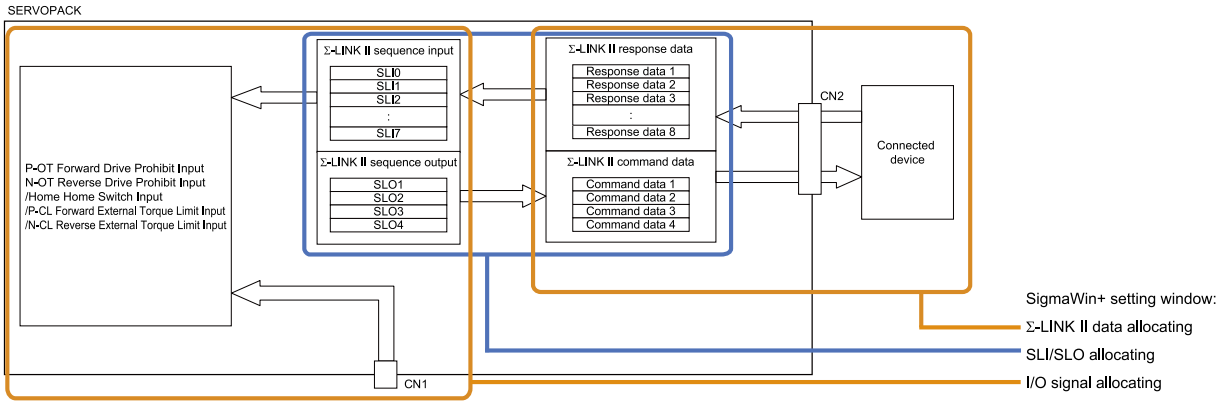

11.7.1 Monitoring the Input Signals of Connected Devices with the SigmaWin+

This section describes how to monitor the signals input to devices connected over Σ-LINK II with the SigmaWin+.

You can check the signals input to devices connected over Σ-LINK II as Σ-LINK II Response Data 1 to 8 with the monitor and trace functions in the SigmaWin+.

Use the SigmaWin+ to configure monitor settings for the input signals of devices connected over Σ-LINK II.

1. **Click [SigmaLINK II Data Allocation] on the [SigmaLINK II Settings] window.**

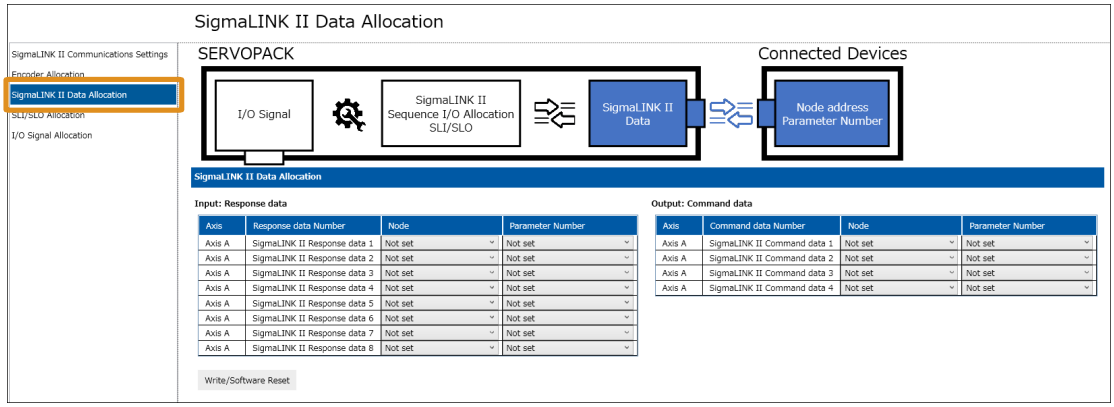

The display of the [SigmaLINK II Communications Settings] area will be changed.

2. **Under [Input: Response Data], set [Node] and [Parameter Number] for the [Response Data Number] to allocate.**

Information

For the parameter number, refer to the device documentation. Refer to the following manual if you use a Yaskawa sensor hub.

Σ-X-Series Σ-LINK II Sensor Hub Instructions (Manual No.: TOMP C710812 06)

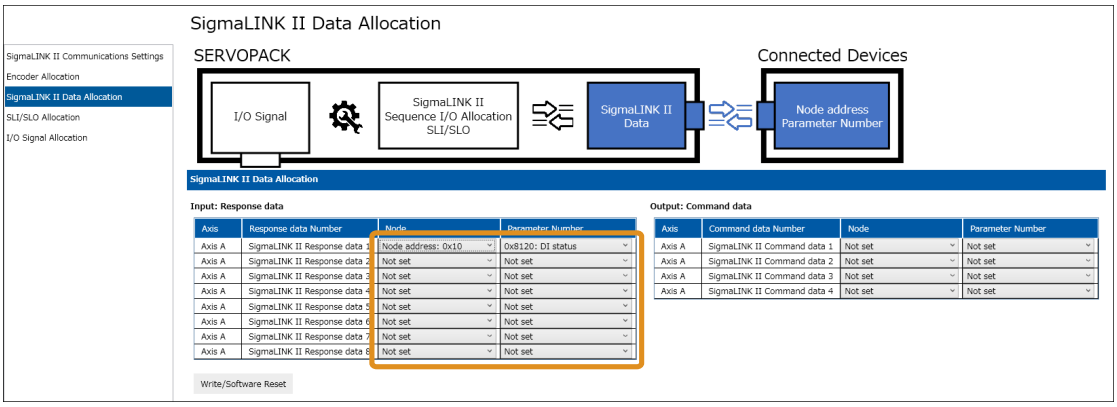

Information You can also set [Output: Command Data] at the same time. Refer to the following section for details.

☞ *11.7.4 Configuring Settings to Output Signals from Connected Devices on page 560*

3. **Click the [Write/Software Reset] button.**

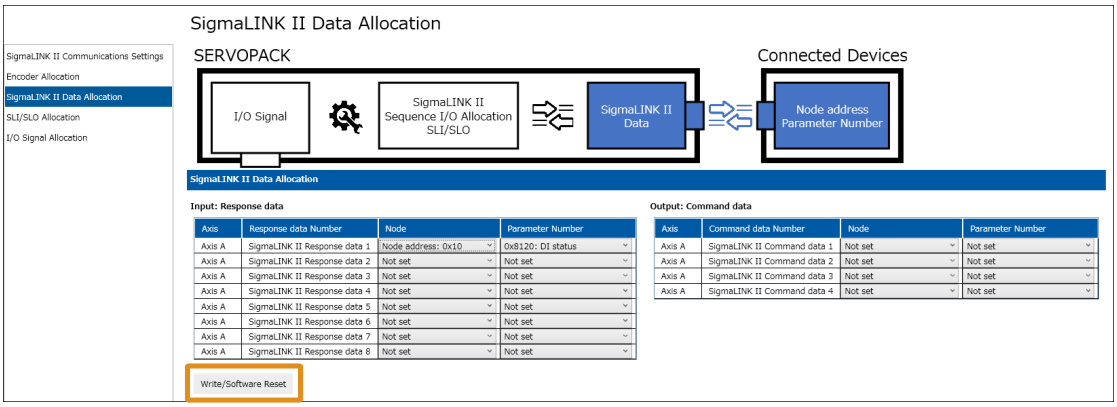

The message dialog box will be displayed.

4. **Click the [Yes] button.**

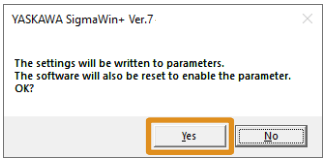

After the software is reset, the content that was set will be saved to the SERVOPACK and another message dialog box will be displayed.

5. **Click the [OK] button.**

This concludes the procedure.

Information
- Refer to the following section for details on checking input signals with the SigmaWin+ monitors.
  ☞ *9.2.2 Operation Monitor, Status Monitor, and I/O Monitor on page 498*
- The input signals of connected devices can also be checked from the host controller. To check input signals from the host controller, configure the settings described here, and then configure the settings shown in the following section.
  ☞ *11.7.2 Monitoring the Input Signals of Connected Devices from the Host Controller on page 555*

(1) Related Parameters

You can also use parameters to configure the settings to monitor the signals input to devices connected over Σ-LINK II with the SigmaWin+. The related parameters are shown next.

Information If you use the SigmaWin+ to configure the settings, these parameters will be automatically set.

To use parameters, set Pn050 to Pn05E. The settings of Pn050 to Pn05E are shown below.

Digit	Description	Remarks
n.□□□□XXXX	Parameter number (0000h to FFFFh)	This setting determines the breakdown of the response data (32 bits). The values are determined by each device.
n. XXXX□□□□	Node address (0010h to 001Eh)	A unique number assigned to each connected device. This value is automatically set during self-configuration.

Example: To Check the Input Signals of the Yaskawa Sensor Hub DI Signals (Parameter Number: 8120) in Σ-LINK II Response Data 1

- In Pn050 = n.□□□□XXXX (SigmaLINK II Response Data Selections 1 = Parameter Number), set the parameter number of the sensor hub DI signals to 8120.
- In Pn050 = n.XXXX□□□□ (SigmaLINK II Response Data Selections 1 = Node Address), set the node address of the sensor hub that was assigned in self-configuration.

Information For the parameter number, refer to the device documentation. Refer to the following manual if you use a Yaskawa sensor hub.

Σ-X-Series Σ-LINK II Sensor Hub Instructions (Manual No.: TOMP C710812 06)

When you configure the above settings, you can check the input signals of the sensor hub with bit 8 to 11 in Σ-LINK II Response Data 1.

Bit	Bit 31 to Bit 12	Bit 11	Bit 10	Bit 9	Bit 8	Bit 7 to Bit 0
Bit Information	Reserved	Information of sensor hub channel 4	Information of sensor hub channel 3	Information of sensor hub channel 2	Information of sensor hub channel 1	Reserved

The following table gives details on the related parameters.

Pn050 (2050h)	SigmaLINK II Response Data Selection 1			Speed Pos Trq
	Setting Range	Setting Unit	Default Setting	When Enabled
	00000000h to FF7EFFFFh	–	00000000h	After restart
Pn052 (2052h)	SigmaLINK II Response Data Selection 2			Speed Pos Trq
	Setting Range	Setting Unit	Default Setting	When Enabled
	00000000h to FF7EFFFFh	–	00000000h	After restart
Pn054 (2054h)	SigmaLINK II Response Data Selection 3			Speed Pos Trq
	Setting Range	Setting Unit	Default Setting	When Enabled
	00000000h to FF7EFFFFh	–	00000000h	After restart
Pn056 (2056h)	SigmaLINK II Response Data Selection 4			Speed Pos Trq
	Setting Range	Setting Unit	Default Setting	When Enabled
	00000000h to FF7EFFFFh	–	00000000h	After restart
Pn058 (2058h)	SigmaLINK II Response Data Selection 5			Speed Pos Trq
	Setting Range	Setting Unit	Default Setting	When Enabled
	00000000h to FF7EFFFFh	–	00000000h	After restart
Pn05A (205Ah)	SigmaLINK II Response Data Selection 6			Speed Pos Trq
	Setting Range	Setting Unit	Default Setting	When Enabled
	00000000h to FF7EFFFFh	–	00000000h	After restart
Pn05C (205Ch)	SigmaLINK II Response Data Selection 7			Speed Pos Trq
	Setting Range	Setting Unit	Default Setting	When Enabled
	00000000h to FF7EFFFFh	–	00000000h	After restart
Pn05E (205Eh)	SigmaLINK II Response Data Selection 8			Speed Pos Trq
	Setting Range	Setting Unit	Default Setting	When Enabled
	00000000h to FF7EFFFFh	–	00000000h	After restart

11.7.2 Monitoring the Input Signals of Connected Devices from the Host Controller

To check input signals from the host controller, configure the settings shown in "*11.7.2 Monitoring the Input Signals of Connected Devices from the Host Controller on page 555*", and then set the following objects.

Index	Subindex	Name	Data Type	Access	PDO Mapping	Value	Saving to EEPROM
2710h	0	Number of entries	USINT	RO	No	3	No
	1	Command	STRING	RW	No	–	No
	2	Status	USINT	RO	No	–	No
	3	Reply	STRING	RO	No	–	No
2773h	0	Number of entries	USINT	RO	No	11	No
	1	Σ-LINK II response data 1	UDINT	RO	Yes	–	No
	2	Σ-LINK II response data 2	UDINT	RO	Yes	–	No
	3	Σ-LINK II response data 3	UDINT	RO	Yes	–	No
	4	Σ-LINK II response data 4	UDINT	RO	Yes	–	No
	5	Σ-LINK II response data 5	UDINT	RO	Yes	–	No
	6	Σ-LINK II response data 6	UDINT	RO	Yes	–	No
	7	Σ-LINK II response data 7	UDINT	RO	Yes	–	No
	8	Σ-LINK II response data 8	UDINT	RO	Yes	–	No
	9	Σ-LINK II data status information	UDINT	RO	Yes	–	No
	10	Reserved	UDINT	RO	Yes	–	No
	11	Reserved	UDINT	RO	Yes	–	No
2774h	0	Number of entries	USINT	RO	No	4	No
	1	Σ-LINK II command data 1	UDINT	RW	Yes	0h to FFFFFFFFh (default: –)	No
	2	Σ-LINK II command data 2	UDINT	RW	Yes	0h to FFFFFFFFh (default: –)	No
	3	Σ-LINK II command data 3	UDINT	RW	Yes	0h to FFFFFFFFh (default: –)	No
	4	Σ-LINK II command data 4	UDINT	RW	Yes	0h to FFFFFFFFh (default: –)	No

Refer to the following section for details on the objects.

☞ *15.5.7 SERVOPACK Adjusting Command (2710h) on page 649*
☞ *15.5.13 Σ-LINK II Data Monitor (2773h, 2774h) on page 657*

11.7.3 Allocating Input Signals of Connected Devices to SERVOPACK Functions and Using those Signals

The signals input to devices connected over Σ-LINK II can be used by allocating them to functions related to SERVOPACK input signals. The signals that can be allocated are given in the following table.

Information This function can be used only when a digital I/O type sensor hub is connected.

Signal	
P-OT	Forward Drive Prohibit Input Signal
N-OT	Reverse Drive Prohibit iInput Signal

Continued on next page.

Continued from previous page.

Signal	
/Home	Home Switch Input Signal
/P-CL	Forward External Torque Limit Input Signal
/N-CL	Reverse External Torque Limit Input Signal

The setting procedure for the SigmaWin+ is shown next.

1. **Check if the Σ-LINK II data allocation settings have been completed.**

   Refer to the following section for details.

   ☞ *11.7.1 Monitoring the Input Signals of Connected Devices with the SigmaWin+ on page 552*

2. **Click [SLI/SLO Allocation] on the [SigmaLINK II Settings] window.**

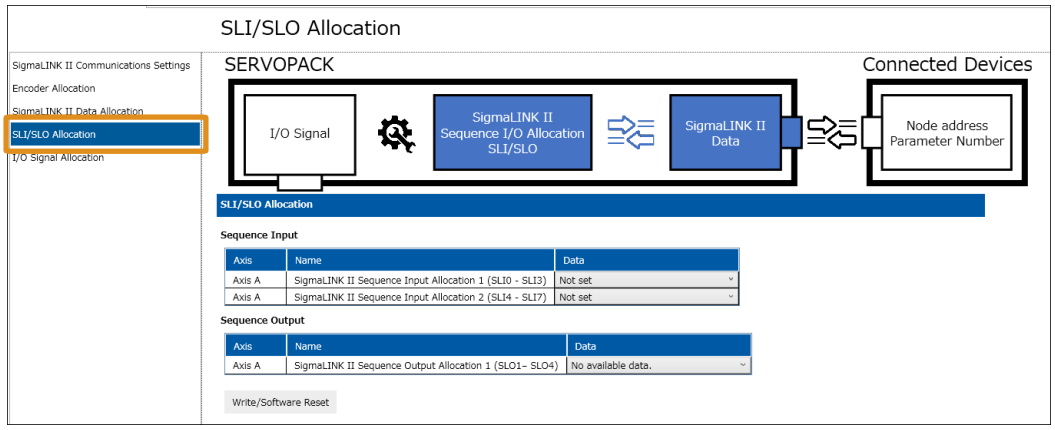

   The display of the [SigmaLINK II Communications Settings] area will be changed.

3. **Under [Sequence Input], select the Σ-LINK II data to allocate.**

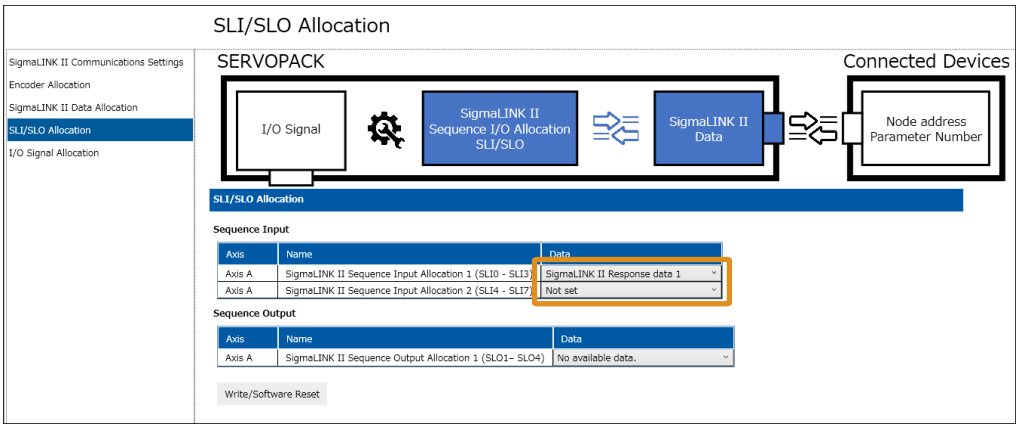

4. **Click the [Write/Software Reset] button.**

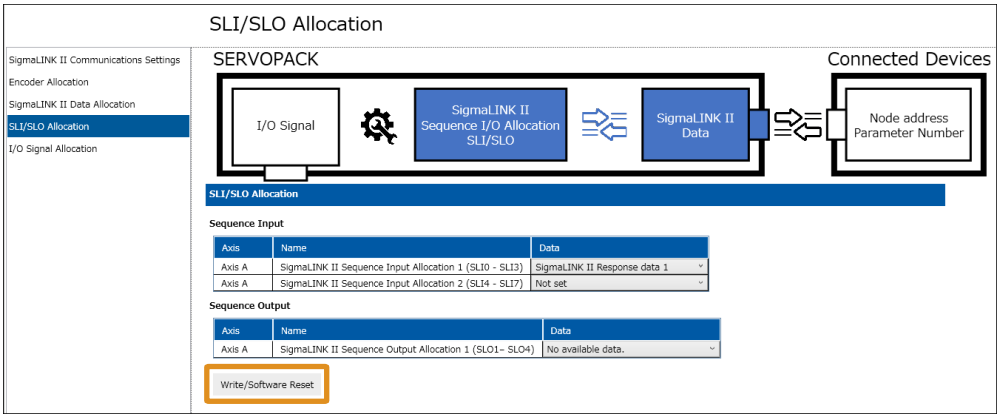

   The message dialog box will be displayed.

5. **Click the [Yes] button.**

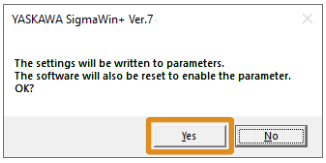

After the software is reset, the content that was set will be saved to the SERVOPACK and another message dialog box will be displayed.

6. **Click the [OK] button.**

Close the message dialog box. You will return to the [SigmaLINK II Settings] window.

7. **Click [I/O Signal Allocation] on the [SigmaLINK II Settings] window.**

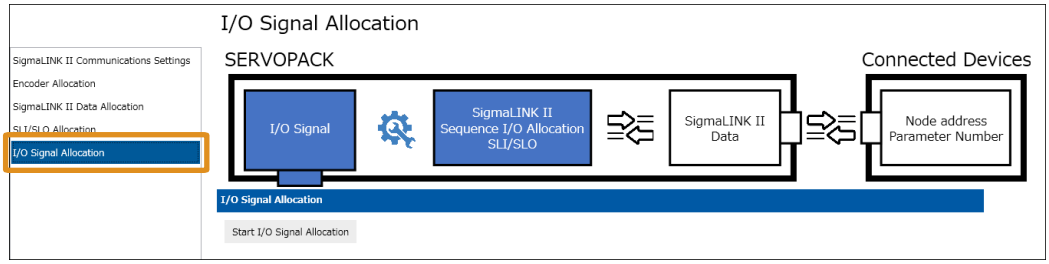

The display of the [SigmaLINK II Communications Settings] area will be changed.

8. **Click the [Start I/O Signal Allocation] button.**

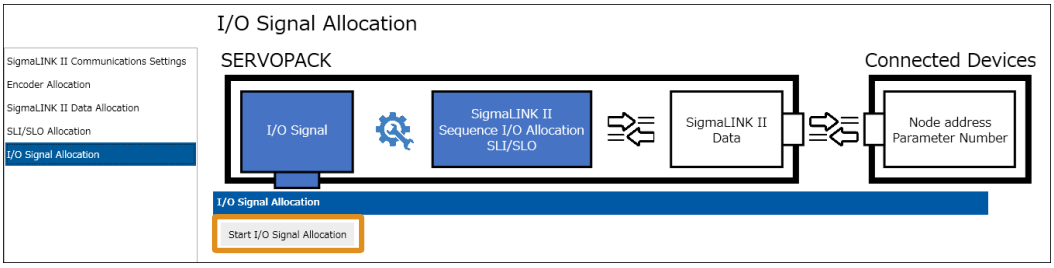

The [Select Axis] window will be displayed.

9. **Click the [Execute] button.**

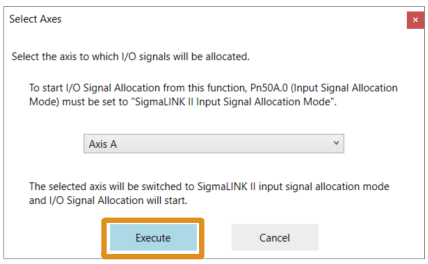

The [I/O Signal Allocation] window will be displayed.

10. **Double-click the [Pin Number] cell of the signal to allocate, select sequence input number that was allocated in step 3, and then press the [Enter] key.**

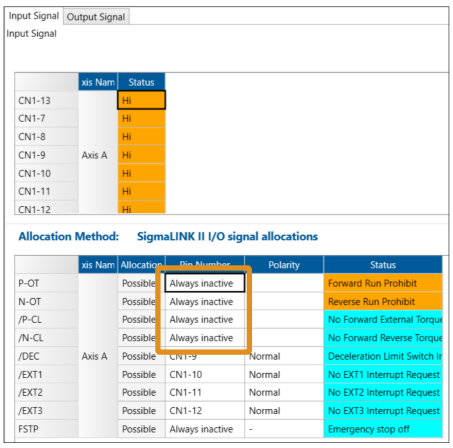

11. **Use the same operation to set [Polarity] as required.**

12. **Click [Write].**

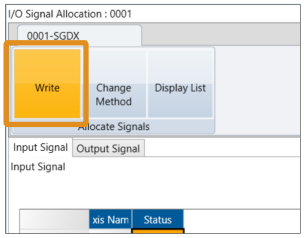

The [Write Signal Allocation Information] dialog box will be displayed.

13. **Click the [Change/Software Reset] button.**

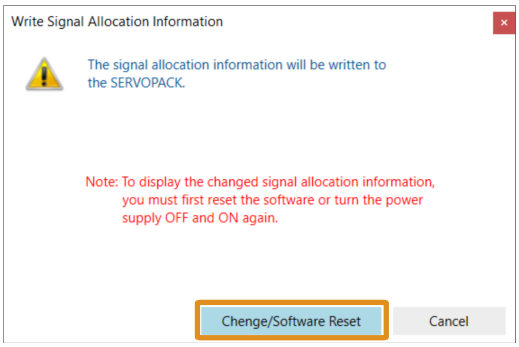

The software will be reset, the content that was set will be applied, and another message dialog box will be displayed.

14. **Click the [OK] button.**

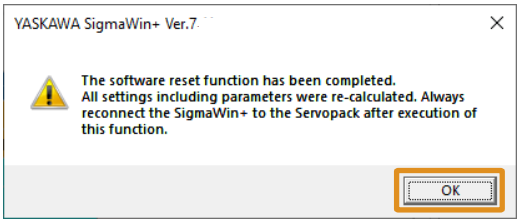

This concludes the procedure.

(1) Related Parameters

You can also use parameters to configure the settings to allocate input signals of connected devices to SERVOPACK functions and to use those signals. The related parameters are shown next.

Information If you use the SigmaWin+ to configure the settings, these parameters will be automatically set.

(a) SLI Allocations

To set the SLI allocations using parameters, allocate Σ-LINK II Response Data 1 to 8 to Pn0B1 (SigmaLINK II Sequence Allocation 1) and Pn0B2 (SigmaLINK II Sequence Allocation 2).

Four bits of continuous data from the bit specified by Pn0B1 = n.XX□□ are allocated as SLI0 to SLI3. Pn0B2 is also allocated as SLI4 to SLI7 in the same manner.

- Pn0B1: Σ-LINK II Sequence Input Allocation 1

		SigmaLINK II Response Data Selection Speed Pos Trq		When Enabled
Pn0B1 (20B1h)	n.□□XX	00 Default	Disable (data is not set to the SigmaLINK II sequence input).	After restart
		01	Allocate SigmaLINK II Response Data 1 to the SigmaLINK II sequence input.	
		02	Allocate SigmaLINK II Response Data 2 to the SigmaLINK II sequence input.	
		03	Allocate SigmaLINK II Response Data 3 to the SigmaLINK II sequence input.	
		04	Allocate SigmaLINK II Response Data 4 to the SigmaLINK II sequence input.	
		05	Allocate SigmaLINK II Response Data 5 to the SigmaLINK II sequence input.	
		06	Allocate SigmaLINK II Response Data 6 to the SigmaLINK II sequence input.	
		07	Allocate SigmaLINK II Response Data 7 to the SigmaLINK II sequence input.	
		08	Allocate SigmaLINK II Response Data 8 to the SigmaLINK II sequence input.	
Pn0B1 (20B1h)	n.XX□□	SigmaLINK II Sequence Input Allocation Start Position Selection Speed Pos Trq		When Enabled
		00 to 20	Specify the allocation start bit to the SigmaLINK II sequence input.	After restart

- Pn0B2: Σ-LINK II Sequence Input Allocation 2
  The setting procedure is the same as Pn0B1.

> **Important**
> If you allocated Σ-LINK II response data to Σ-LINK II sequence inputs, A.Cd7 (SigmaLINK II I/O Device Communications Error) and A.Cd8 (SigmaLINK II I/O Device Status Error) will occur regardless of the setting of Pn0DD (SigmaLINK II I/O Device Error Detection Selection).

(b) I/O Signal Allocation

To set the I/O signal allocations using parameters, allocate the Σ-LINK II sequence inputs (SLI0 to SLI7) to SERVOPACK functions.

First, set Pn50A to n.□□□2 (use Pn590 to Pn5BC (SigmaLINK II input signal allocation mode)).

		Input Signal Allocation Mode Speed Pos Trq		When Enabled
Pn50A (250Ah)	n.□□□X	0	Reserved (Do not use.)	After restart
		1 Default	Use Pn50A to Pn516 (Sigma-7S-compatible I/O signal allocation mode).	
		2	Use Pn590 to Pn5BC (SigmaLINK II input signal allocation mode).	

Next, set the settings of the signals to input from the Σ-LINK II connected device to □1□□□ (allocate the signal to SIgmaLINK II Sequence Input □).

Set the settings of the signals to input from the I/O signal connector (CN1) to □0□□ (allocate signal to CN1-□).

Refer to the following section for the parameters and settings used to set the signals.

☞ *(2) Σ-LINK II Input Signal Allocations on page 233*

Finally, set the signals to output from the I/O signal connector (CN1).

Refer to the following section for the parameters and settings used to set the signals.

☞ *(2) Σ-LINK II Input Signal Allocations on page 235*

11.7.4 Configuring Settings to Output Signals from Connected Devices

Use the following setting procedure to output a signal to a device connected over Σ-LINK II. When you configure these settings, you can check the signals to output as Σ-LINK II Command Data 1 to 4 with the monitor and trace functions in the SigmaWin+.

You will use the SigmaWin+ to configure these settings.

1. **Click [SigmaLINK II Data Allocation] on the [SigmaLINK II Settings] window.**

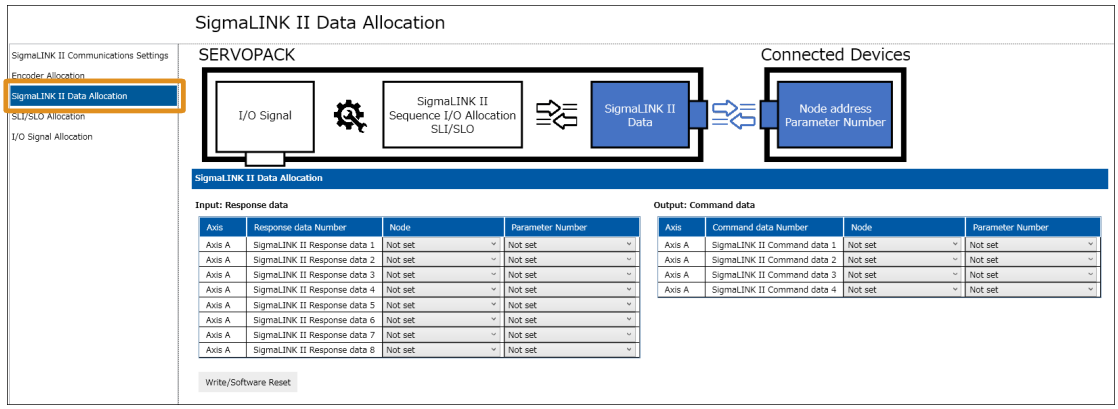

The display of the [SigmaLINK II Communications Settings] area will be changed.

2. **Under [Output: Command Data], set [Node] and [Parameter Number] for the [Command Data Number] to allocate.**

Information

For the parameter number, refer to the device documentation. Refer to the following manual if you use a Yaskawa sensor hub.

📖 Σ-X-Series Σ-LINK II Sensor Hub Instructions (Manual No.: TOMP C710812 06)

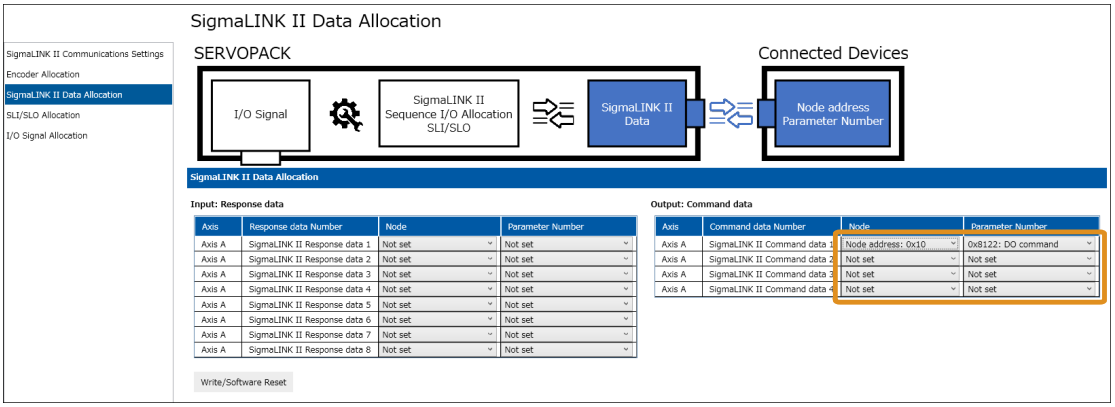

Information

You can also set [Input: Response Data] at the same time. Refer to the following section for details.

☞ *11.7.1 Monitoring the Input Signals of Connected Devices with the SigmaWin+ on page 552*

3. **Click the [Write/Software Reset] button.**

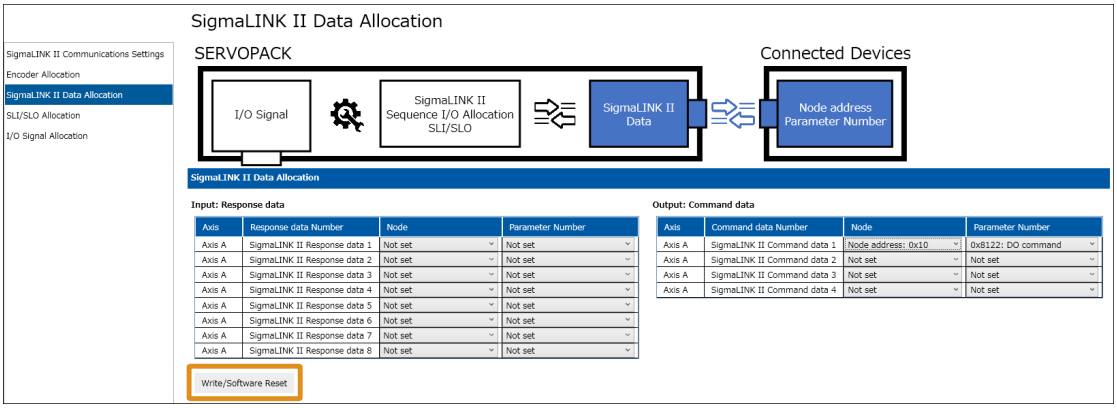

The message dialog box will be displayed.

4. **Click the [Yes] button.**

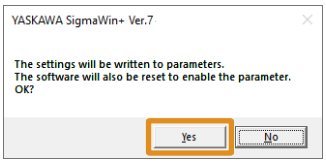

After the software is reset, the content that was set will be saved to the SERVOPACK and another message dialog box will be displayed.

5. **Click the [OK] button.**

6. **Click [SLI/SLO Allocation] on the [SigmaLINK II Settings] window.**

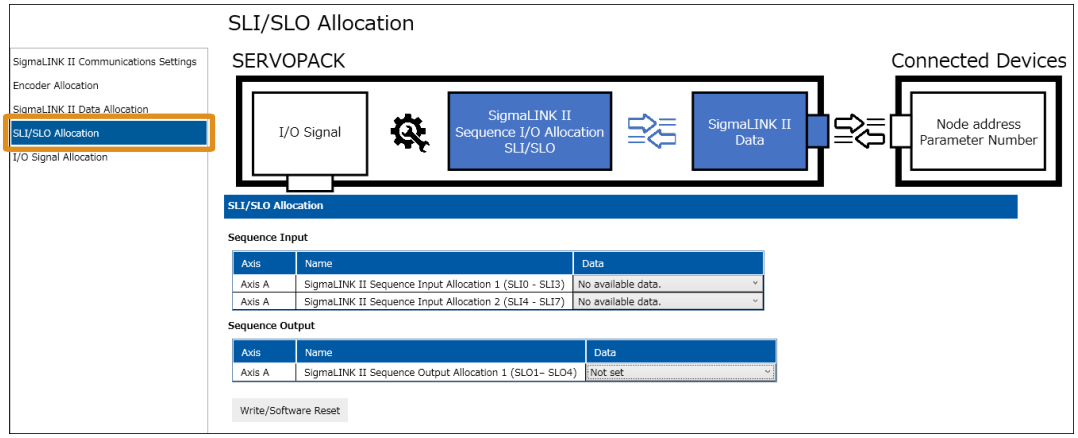

The display of the [SigmaLINK II Communications Settings] area will be changed.

7. **Under [Sequence Output], select the Σ-LINK II data to allocate.**

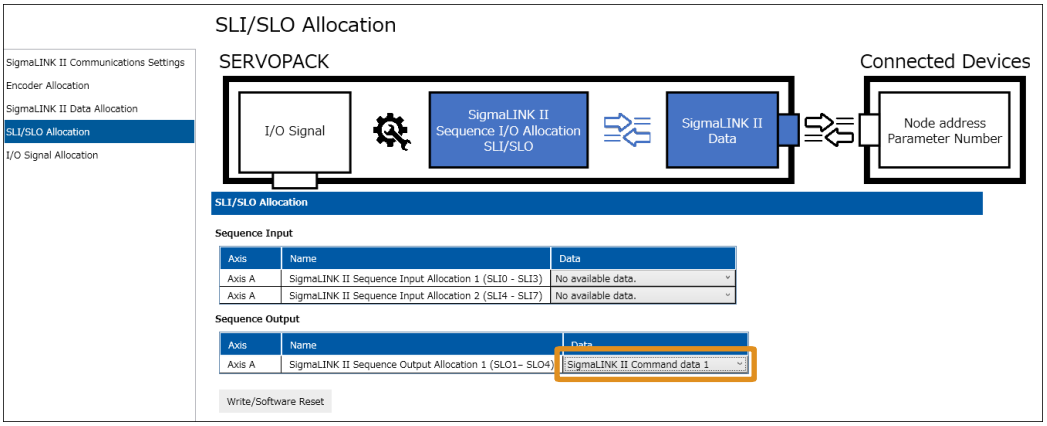

8. **Click the [Write/Software Reset] button.**

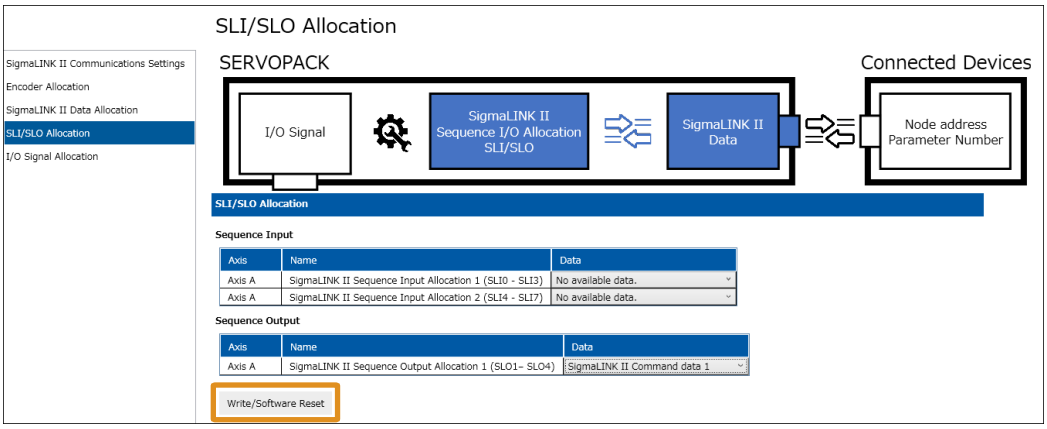

The message dialog box will be displayed.

9. **Click the [Yes] button.**

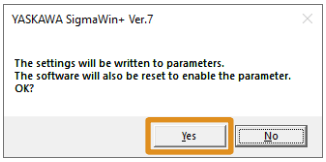

After the software is reset, the content that was set will be saved to the SERVOPACK and another message dialog box will be displayed.

10. **Click the [OK] button.**

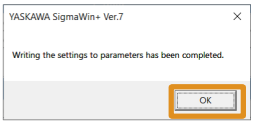

This concludes the procedure.

Information The signals to output from connected devices can also be checked from the host controller. To check input signals from the host controller, configure the settings described here, and then configure the settings shown in the following section.

☞ *11.7.2 Monitoring the Input Signals of Connected Devices from the Host Controller on page 555*

(1) Related Parameters

You can also use parameters to configure the settings to output signals from connected devices. The related parameters are shown next.

Information If you use the SigmaWin+ to configure the settings, these parameters will be automatically set.

(a) SLO Allocations

Assign the Σ-LINK II command data bits to the Σ-LINK II sequence outputs (SLO1 to SLO3).

Four bits of continuous data from the bit specified by Pn0B5 = n.XX□□ are allocated as SLO1 to SLO3.

Pn0B5 (20B5h)	n.□□XX	SigmaLINK II Command Data Selection Speed Pos Trq		When Enabled
		00 Default	Disable (data is not set to the SigmaLINK II sequence output).	After restart
		01	Allocate SigmaLINK II Command Data 1 to the SigmaLINK II sequence output.	
		02	Allocate SigmaLINK II Command Data 2 to the SigmaLINK II sequence output.	
		03	Allocate SigmaLINK II Command Data 3 to the SigmaLINK II sequence output.	
		04	Allocate SigmaLINK II Command Data 4 to the SigmaLINK II sequence output.	
Pn0B5 (20B5h)	n.XX□□	SigmaLINK II Sequence Output Allocation Start Position Selection Speed Pos Trq		When Enabled
		00 to 20	Specify the allocation start bit to the SigmaLINK II sequence output.	After restart

Important If you allocated Σ-LINK II response data to Σ-LINK II sequence inputs, A.Cd7 (SigmaLINK II I/O Device Communications Error) and A.Cd8 (SigmaLINK II I/O Device Status Error) will occur regardless of the setting of Pn0DD (SigmaLINK II I/O Device Error Detection Selection).

Refer to the following sections for details on SO1 to SO3.

☞ *15.16.2 Digital Outputs (60FEh) on page 688*

(b) Allocating Σ-LINK II Data

To set Σ-LINK II allocations using parameters, use Pn090 to Pn094 to set information about the connected devices from which to output signals. The settings of Pn090 to Pn094 are shown below.

Digit	Description	Remarks
n.□□□□XXXX	Parameter number (0000h to FFFFh)	This setting determines the breakdown of the response data (32 bits). The values are determined by each device.
n.XXXX□□□□	Node address (0010h to 001Eh)	A unique number assigned to each connected device. This value is automatically set during self-configuration.

Example: To Output the Σ-LINK II Command Data 1 Signals to Yaskawa Sensor Hub DO Signals (Parameter Number: 8122)

- In Pn090 = n.□□□□8122 (SigmaLINK II Command Data Selections 1 = Parameter Number), set the parameter number of the output destination sensor hub DO signals to 8122.
- In Pn090 = n.XXXX□□□□ (SigmaLINK II Command Data Selections 1 = Node Address), set the node address of the sensor hub that was assigned in self-configuration.

Information For the parameter number, refer to the device documentation. Refer to the following manual if you use a Yaskawa sensor hub.

Σ-X-Series Σ-LINK II Sensor Hub Instructions (Manual No.: TOMP C710812 06)

When you configure the above settings, you can check the output signals with bit 1 to 4 on the sensor hub.

Bit	Bit 31 to Bit 4	Bit 3	Bit 2	Bit 1	Bit 0
Bit Information	Reserved	Information of sensor hub channel 4	Information of sensor hub channel 3	Information of sensor hub channel 2	Information of sensor hub channel 1

The following table gives details on the related parameters.

Pn090 (2090h)	SigmaLINK II Command Data Selection 1			Speed Pos Trq
	Setting Range	Setting Unit	Default Setting	When Enabled
	00000000h to FF7EFFFFh	–	00000000h	After restart
Pn092 (2092h)	SigmaLINK II Command Data Selection 2			Speed Pos Trq
	Setting Range	Setting Unit	Default Setting	When Enabled
	00000000h to FF7EFFFFh	–	00000000h	After restart
Pn094 (2094h)	SigmaLINK II Command Data Selection 3			Speed Pos Trq
	Setting Range	Setting Unit	Default Setting	When Enabled
	00000000h to FF7EFFFFh	–	00000000h	After restart
Pn096 (2096h)	SigmaLINK II Command Data Selection 4			Speed Pos Trq
	Setting Range	Setting Unit	Default Setting	When Enabled
	00000000h to FF7EFFFFh	–	00000000h	After restart

11.8 Changing Detection Conditions of Alarms Related to Σ-LINK II

You can change the detection conditions for certain alarms related to Σ-LINK II by setting the relevant parameters.

11.8.1 Connected Node Change Detection Condition

When a node or connection configuration is detected after restart that differs from the saved self-configuration results, A.Cd4 (SigmaLINK II Node Change Detected) will occur.

Set the detection conditions at this time with Pn0DC = n.□□□X.

		Connected Node Change Detection Condition Speed Pos Trq		When Enabled
Pn0DC (20DCh)	n.□□□X	0 Default	Set vendor ID and product ID as conditions.	After restart
		1	Set vendor ID, product ID, and serial number as conditions.	
		2	Set vendor ID, product ID, and product version as conditions.	
		3	Set vendor ID, product ID, product version, and serial number as conditions.	

11.8.2 Σ-LINK II I/O Device Error Detection Selection

You can select the detection method for Σ-LINK II I/O device errors by setting Pn0DD (SigmaLINK II I/O Device Error Detection Selection).

		SigmaLINK II I/O Device Communications Check Mask Speed Pos Trq		When Enabled
Pn0DD (20DDh)	n.□□□X	0 Default	Set SigmaLINK II slave communications error as an alarm (A.Cd7).	After restart
		1	Set SigmaLINK II slave communications error as a warning (A.932).	
		2	Do not detect the SigmaLINK II slave communications error.	
		SigmaLINK II I/O Device Status Check Mask Speed Pos Trq		**When Enabled**
Pn0DD (20DDh)	n.□X□□	0	A.Cd8 occurs when the alarm or warning signal is received from the Sigma-LINK II slave.	After restart
		1 Default	A.Cd8 occurs when the alarm signal is received from the SigmaLINK II slave and A.933 occurs when the warning signal is received.	
		2	A.933 occurs when the alarm or warning signal is received from the Sigma-LINK II slave.	
		3	Do not detect the SigmaLINK II slave status error.	

Note:

If you allocated Σ-LINK II I/O response data to Σ-LINK II sequence inputs, A.Cd7 (SigmaLINK II I/O Device Communications Error) and A.Cd8 (SigmaLINK II I/O Device Status Error) will occur regardless of the setting of Pn0DD.

12

Safety Functions

This chapter provides detailed information on the Safety Functions of the SERVOPACK.

12.1 Introduction to the Safety Functions 568
12.1.1 Safety Functions 568
12.1.2 Precautions for Safety Functions 568

12.2 Hard Wire Base Block (HWBB) 569
12.2.1 Risk Assessment 569
12.2.2 Hard Wire Base Block (HWBB) State 570
12.2.3 Resetting the HWBB State 570
12.2.4 Recovery Method 571
12.2.5 Detecting Errors in HWBB Signal 572
12.2.6 HWBB Input Signal Specifications 572
12.2.7 Operation without a Host Controller 572
12.2.8 /S-RDY (Servo Ready Output) Signal 573
12.2.9 /BK (Brake Output) Signal 573
12.2.10 Stopping Methods 574
12.2.11 ALM (Servo Alarm) Signal 574

12.3 EDM1 (External Device Monitor) 575
12.3.1 EDM1 Output Signal Specifications 575

12.4 Applications Examples for Safety Functions 576
12.4.1 Connection Example 576
12.4.2 Failure Detection Method 576
12.4.3 Procedure 577

12.5 Validating Safety Functions 578

12.6 Connecting a Safety Function Device 579

12.7 Advanced Safety Module 580

12.1 Introduction to the Safety Functions

12.1.1 Safety Functions

Safety Functions are built into the SERVOPACK to reduce the risks associated with using the machine by protecting workers from the hazards of moving machine parts and otherwise increasing the safety of machine operation. Especially when working in hazardous areas inside guards, such as for machine maintenance, the Safety Function can be used to avoid hazardous moving machine parts.

Refer to the following section for information on the Safety Function and safety parameters.

☞ *i.8.4 Safety Standards on page 49*

Important

Products that display the TÜV mark on the nameplate have met the safety standards.

12.1.2 Precautions for Safety Functions

WARNING

To confirm that the HWBB function satisfies the safety requirements of the system, you must conduct a risk assessment of the system.

Incorrect use of the Safety Function may cause injury.

The servomotor will move if there is an external force (e.g., gravity on a vertical axis) even when the HWBB function is operating. Use a separate means, such as a mechanical brake, that satisfies the safety requirements.

Incorrect use of the Safety Function may cause injury.

While the HWBB function is operating, the motor may move within an electric angle of 180° or less as a result of a SERVOPACK failure. Use the HWBB function for an application only after confirming that movement of the motor will not result in a hazardous condition.

Incorrect use of the Safety Function may cause injury.

The dynamic brake and the brake signal are not safety-related elements. You must design the system so that SERVOPACK failures will not cause a hazardous condition while the HWBB function is operating.

Incorrect use of the Safety Function may cause injury.

Connect devices that satisfy the safety standards for the signals for Safety Functions.

Incorrect use of the Safety Function may cause injury.

The HWBB function does not shut OFF the power to the SERVOPACK or electrically isolate it. Implement measures to shut OFF the power to the SERVOPACK before you perform maintenance on it.

There is a risk of electric shock.

12.2 Hard Wire Base Block (HWBB)

A hard wire base block (abbreviated as HWBB) is a Safety Function that is designed to shut OFF the current to the servomotor with a hardwired circuit.

The drive signals to the power module that controls the motor current are controlled by the circuits that are independently connected to the two input signal channels to turn OFF the power module and shut OFF the motor current.

Refer to the following section for connection specification for signals.

☞ *4.6 Connecting Safety Function Signals on page 160*

Important

- Connect the Safety Function input signals (/HWBB1 and /HWBB2) as sink inputs when viewed from the SERVOPACK side. Make the connections this way because a safe failure will occur if the /HWBB1 and /HWBB2 signals are connected to 0 V. This differs from the wiring example for other input signals described in "*4.5.3 I/O Signal Wiring Examples on page 156*".
  The ON and OFF status of signals for the Safety Function are also defined as follows:
  – ON: The state in which the relay contacts are closed or the transistor is ON and current flows into the signal line.
  – OFF: The state in which the relay contacts are open or the transistor is OFF and no current flows into the signal line.
- For the 24-V power supply, use an SELV power supply.

The following figure shows a connection example.

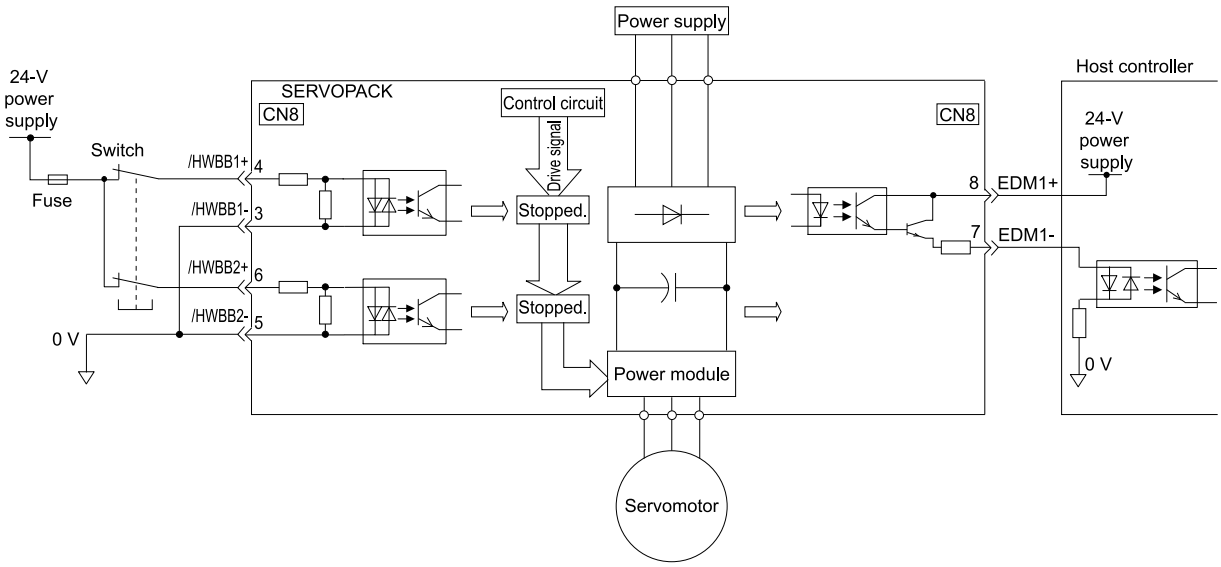

Whether or not you use the EDM1 signal does not affect the performance level of safety parameters.

You can use the EDM1 signal if the system requires it, such as when a Σ-X SERVOPACK is replacing a Σ-7 SERVOPACK in the system.

12.2.1 Risk Assessment

When using the HWBB, you must perform a risk assessment of the servo system in advance to confirm that the safety level of the standards is satisfied. Refer to the following section for details on the standards.

☞ *i.8 Compliance with UL Standards, EU Directives, and Other Safety Standards on page 48*

The following hazards exist even when the HWBB is operating. These hazards must be included in the risk assessment.

- The servomotor will move if an external force is applied to it (for example, gravity on a vertical axis). Implement measures to hold the servomotor, such as installing a separate mechanical brake.
- If a failure occurs such as a power module failure, the servomotor may move within an electric angle of 180°. Ensure safety even if the servomotor moves.
  The rotational angle or travel distance depends on the type of servomotor as follows:
  – Rotary servomotor: 1/6 rotation max. (rotational angle calculated at the motor shaft)
  – Direct drive servomotor: 1/20 rotation max. (rotational angle calculated at the motor shaft)

– Linear servomotor: 50 mm max.

- The HWBB does not shut OFF the power to the SERVOPACK or electrically isolate it. Implement measures to shut OFF the power to the SERVOPACK before you perform maintenance on it.

12.2.2 Hard Wire Base Block (HWBB) State

The SERVOPACK will be in the following state if the HWBB operates. If the /HWBB1 or /HWBB2 signal turns OFF, the HWBB will operate and the SERVOPACK will enter a HWBB state.

·When HWBB Operates after Servo OFF (Power Not Supplied to Motor)

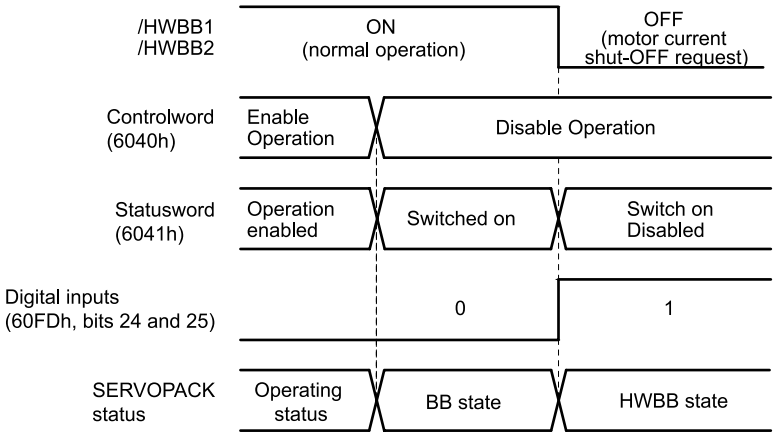

·When HWBB Operates While Power Is Supplied to Motor

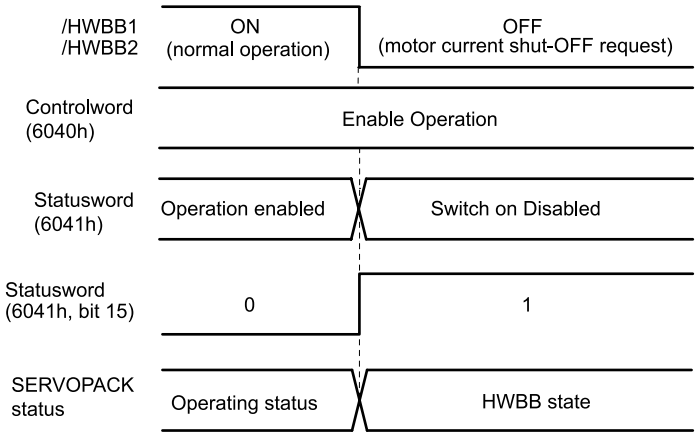

12.2.3 Resetting the HWBB State

Normally, after the Shutdown command is sent and power is no longer supplied to the servomotor, the /HWBB1 and /HWBB2 signals will turn OFF and the SERVOPACK will enter the HWBB state. If you turn ON the /HWBB1 and /HWBB2 signals in this state, the SERVOPACK will enter a base block (BB) state and will be ready to acknowledge the Servo ON command (Enable Operation command).

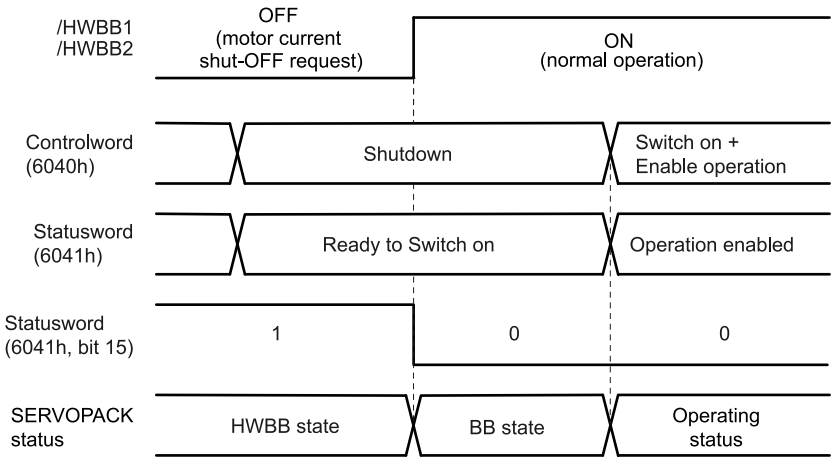

If the SERVOPACK enters the HWBB state while power is supplied to the motor, turn ON the /HWBB1 and /HWBB2 signals, and then send the Servo ON command (Enable Operation command) to restore the normal operating status.

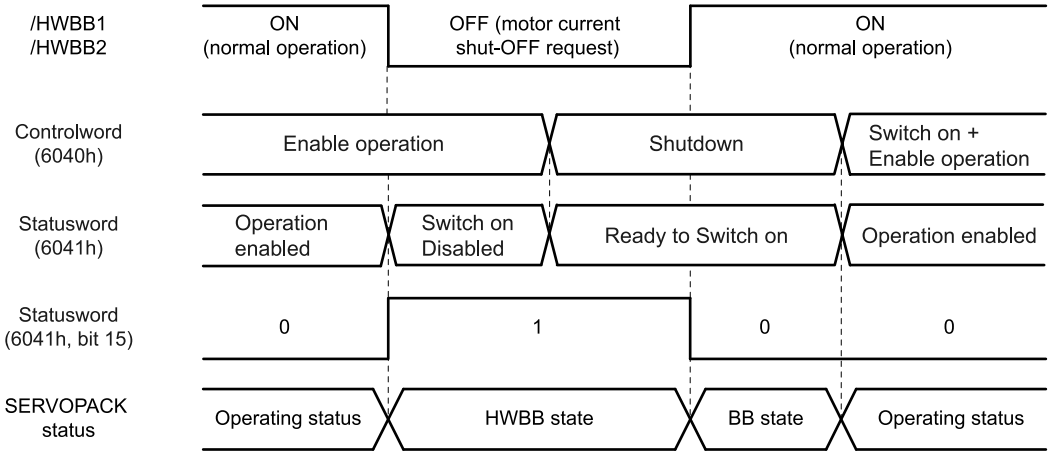

If the SERVOPACK enters the HWBB state while the Enable Operation command is being sent, send the Shutdown command. Next, send the Switch ON + Enable Operation command again to restore the normal operating status.

12.2.4 Recovery Method

(1) Recovery Conditions

All of the following conditions must be met.

- All safety request inputs are ON.
- The Servo ON command (Enable Operation command) was not sent.
- None of the following utility functions have been executed. (These functions execute the Servo ON command (Enable Operation command).)

The following utility functions execute the Servo ON command (Enable Operation command).

Utility Function No.	Function Name
Fn002	Jog
Fn003	Origin Search
Fn004	Jog Program
Fn00E	Autotune Motor Current Detection Signal Offset
Fn080	Polarity Detection

Continued on next page.

Continued from previous page.

Utility Function No.	Function Name
Fn201	Advanced Autotuning without Reference
Fn206	Easy FFT

Note:

If any of the above utility functions was executed, the utility function must be ended. Perform the operation to return to the Main Menu for the utility functions on the digital operator. Refer to the following manual for operating procedures.

Σ-7-Series Digital Operator Operating Manual (Manual No.: SIEP S800001 33)

(2) Recovery Procedure

1. **Specify Shutdown in controlword (6040h, bits 0 to 3) to reset the servo drive.**
2. **Specify Switch ON and the Servo ON command (Enable Operation command) in controlword (6040h, bits 0 to 3).**

Power is supplied to the servomotor.

12.2.5 Detecting Errors in HWBB Signal

If only the /HWBB1 or the /HWBB2 signal is input, an A.Eb1 alarm (Safety Function Signal Input Timing Error) will occur unless the other signal is input within 10 seconds. This makes it possible to detect failures, such as disconnection of an HWBB signal. If the A.Eb1 alarm occurs, check the wiring.

⚠ CAUTION

The A.Eb1 alarm (Safety Function Signal Input Timing Error) is not a safety-related element. Keep this in mind when you design the system.

12.2.6 HWBB Input Signal Specifications

If an HWBB is requested by turning OFF the two HWBB input signal channels (/HWBB1 and /HWBB2), the power to the servomotor will be turned OFF within 4 ms.

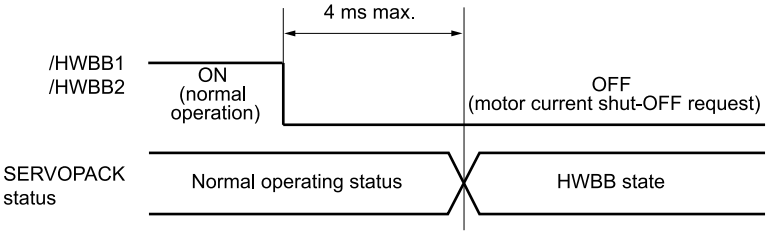

Note:

- The OFF status is not recognized if the OFF interval of the /HWBB1 or /HWBB2 signal is 0.5 ms or shorter. However, in certain situations, such as when you input test pulses and you do not want the HWBB function to respond, make the interval between OFF intervals (i.e., the ON interval) 0.5 ms or longer. The reason for this is that the OFF status may be recognized if a signal repeatedly turns OFF even though the OFF interval is 0.5 ms or shorter.
- You can check the status of the input signals by using monitor displays.

12.2.7 Operation without a Host Controller

The HWBB will operate even for operation without a host controller.

However, if the HWBB operates during execution of the following functions, leave the execution mode for the function and then enter it again to restart operation. Operation will not be restarted simply by turning ON the /HWBB1 and /HWBB2 signals.

Applicable Functions	Resetting the HWBB State
• Jog • Origin Search • Jog Program • Autotuning without Host Reference • Easy FFT • Adjust the Motor Current Detection Signal Offsets	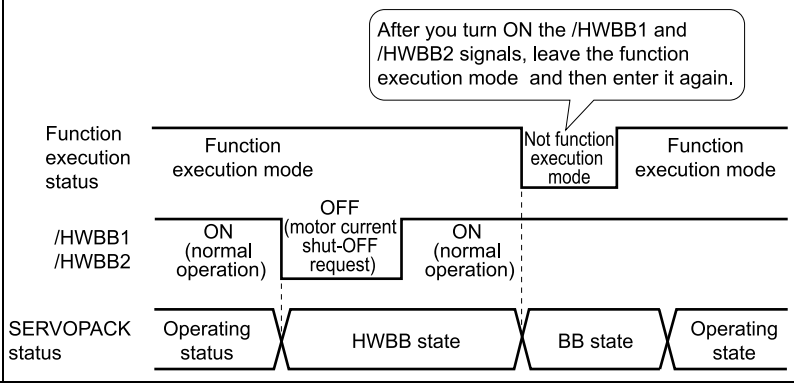

12.2.8 /S-RDY (Servo Ready Output) Signal

The Servo ON command (Enable Operation command) will not be acknowledged in the HWBB state. Therefore, the Servo Ready Output Signal will turn OFF. The Servo Ready Output Signal will turn ON if both the /HWBB1 and /HWBB2 signals are ON and the servo is turned OFF (BB state).

An example is provided below for when the main circuit power is ON when there is no servo alarm.

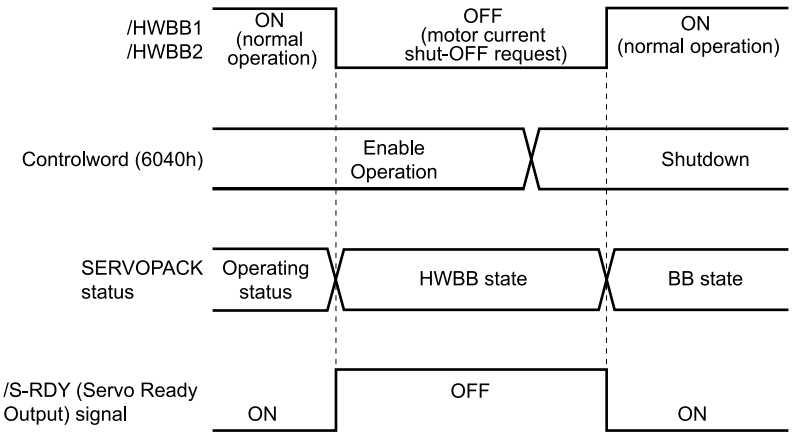

12.2.9 /BK (Brake Output) Signal

If the HWBB operates when the /HWBB1 or /HWBB2 signal is OFF, the /BK (Brake) signal will turn OFF. At that time, the setting in Pn506 (Brake Reference - Servo OFF Delay Time) will be disabled. Therefore, the servomotor may be moved by external force until the actual brake becomes effective after the /BK signal turns OFF.

⚠ CAUTION

The brake signal is not a safety-related element. You must design the system so that a hazardous condition does not occur even if the brake signal fails in the HWBB state. Also, if a servomotor with a brake is used, keep in mind that the brake in the servomotor is used only to prevent the moving part from being moved by gravity or an external force and it cannot be used to stop the servomotor.

12.2.10 Stopping Methods

If the /HWBB1 or /HWBB2 signal turns OFF and the HWBB operates, the servomotor will stop according to the stop mode that is set for Pn001 = n.□□□X (Motor Stopping Method for Servo OFF). However, if you set Pn001 = n.□□□0 or n.□□□1 (stop the motor by applying the dynamic brake), observe the following precautions.

⚠ CAUTION

The dynamic brake is not a safety-related element. You must design the system so that a hazardous condition does not occur even if the servomotor coasts to a stop in the HWBB state. Normally, we recommend that you use a sequence that returns to the HWBB state after stopping for a reference.

If the application frequently uses the HWBB, stopping with the dynamic brake may result in the deterioration of elements in the SERVOPACK. To prevent internal elements from deteriorating, use a sequence in which the HWBB state is returned to after the servomotor has come to a stop.

12.2.11 ALM (Servo Alarm) Signal

The ALM (Servo Alarm) signal is not output in the HWBB state.

12.3 EDM1 (External Device Monitor)

The EDM1 (External Device Monitor) signal is used to monitor failures in the HWBB. Connect the monitor signal as a feedback signal, e.g., to the safety unit.

Whether or not you use the EDM1 signal does not affect the performance level of safety parameters.

You can use the EDM1 signal if the system requires it, such as when a Σ-X SERVOPACK is replacing a Σ-7 SERVOPACK in the system.

- Failure Detection Signal for EDM1 Signal
  The relationship between the EDM1, /HWBB1, and /HWBB2 signals is shown below.
  Detection of failures in the EDM1 signal circuit can be achieved by using the status of the /HWBB1, /HWBB2, and EDM1 signals in the following table. A failure can be detected by checking the failure status, e.g., when the power is turned ON.

Signal	Logic			
/HWBB1	ON	ON	OFF	OFF
/HWBB2	ON	OFF	ON	OFF
EDM1	OFF	OFF	OFF	ON

⚠ WARNING

The EDM1 signal is not a safety output. Use it only for monitoring for failures.

12.3.1 EDM1 Output Signal Specifications

If an HWBB is requested by turning OFF the two HWBB input signal channels (/HWBB1 and /HWBB2) when the Safety Function is operating normally, the EDM1 output signal will be turned ON within 4 ms.

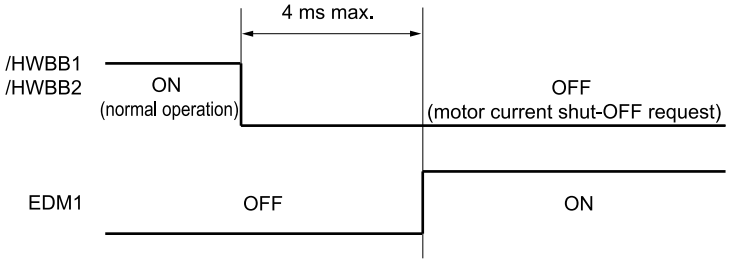

12.4 Applications Examples for Safety Functions

This section provides examples of using the Safety Functions.

12.4.1 Connection Example

In the following example, a safety unit is used and the Safety Base Block operates when the guard is opened.

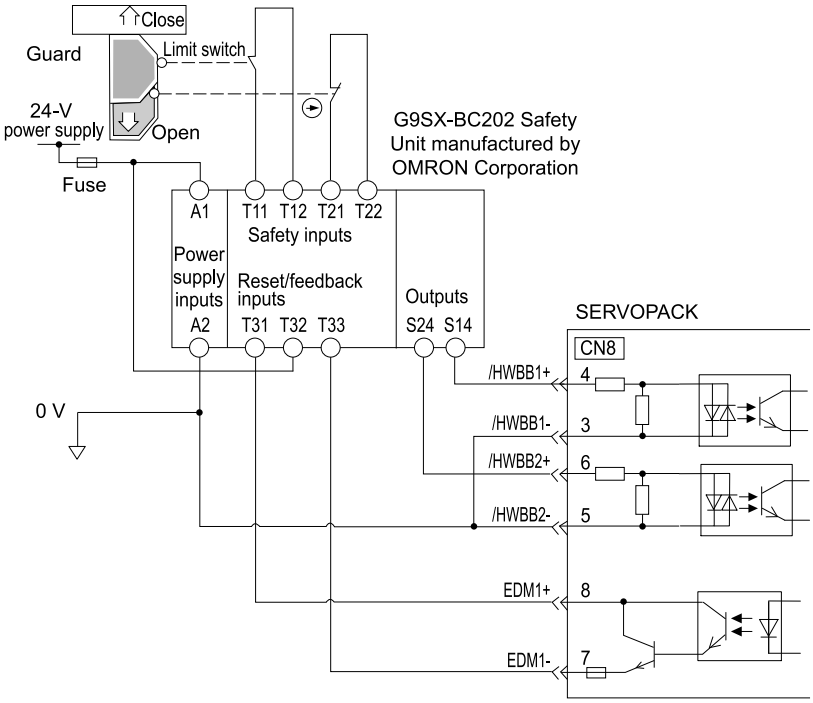

When the guard is opened, both the /HWBB1 and /HWBB2 signals turn OFF and the EDM1 signal turns ON, and this turns ON the feedback inputs and resets the safety unit. When the guard is closed from this state, the /HWBB1 and /HWBB2 signals turn ON and the SERVOPACK can be reset from the HWBB state.

Note:

The EDM1 signal is used as a source output. Refer to the following section for information on making the connection to the host controller.

☞ *(2) Diagnostic Output Circuits on page 161*

12.4.2 Failure Detection Method

If a failure occurs (e.g., the /HWBB1 or the /HWBB2 signal remains ON), the safety unit is not reset when the guard is closed because the EDM1 signal remains OFF. Therefore starting is not possible and an error is detected.

In this case the following must be considered: an error in the external device, disconnection of the external wiring, short-circuiting in the external wiring, or a failure in the SERVOPACK. Find the cause and correct the problem.

12.4.3 Procedure

1	Request is received to open the guard.
2	If the servomotor is operating, a stop command is received from the host controller, the servomotor stops, and the servo is turned OFF.
3	The guard is opened.
4	The /HWBB1 and /HWBB2 signals turn OFF and the HWBB operates. (Working inside the guard is enabled.)
5	The worker leaves the guarded area after completing work.
6	The guard is closed.
7	The servo is turned ON by the host controller.

12.5 Validating Safety Functions

When you commission the system or perform maintenance or SERVOPACK replacement, you must always perform the following validation test on the HWBB function after completing the wiring. (It is recommended that you keep the confirmation results as a record.)

- When the /HWBB1 and /HWBB2 signals turn OFF, confirm that the panel display or digital operator displays Hbb and that the servomotor does not operate.
  If the display does not show Hbb, check the ON/OFF status of the /HWBB1 and /HWBB2 signals.
- Monitor the ON/OFF status of the /HWBB1 and /HWBB2 signals.
  If the ON/OFF status of the signals do not coincide with the display, the following must be considered: an error in the external device, disconnection of the external wiring, short-circuiting in the external wiring, or a failure in the SERVOPACK. Find the cause and correct the problem.
- If you use the EDM1 signal, confirm that the EDM1 signal is OFF while in normal operation by using the feedback circuit input display of the connected device.
  (Whether or not you use the EDM1 signal does not affect the performance level of safety parameters.)

Information

You can use the [Status] monitor in the SigmaWin+ to check the ON/OFF status of the /HWBB1 and /HWBB2 signals. Refer to the following section for details.

☞ *9.2.2 Operation Monitor, Status Monitor, and I/O Monitor on page 498*

The /HWBB1 and /HWBB2 signals can also be traced using the trace function in the SigmaWin+. Refer to the following sections for details.

☞ *9.3 Monitoring Machine Operation Status and Signal Waveforms on page 506*

Based on chapter 7.3.3.4 in IEC 62061:2021, conducting a periodic validation test and keeping records of the test results is recommended to prevent the loss of the HWBB function due to cumulative failures. The recommended intervals for conducting the periodic validation test are as follows:

- If the system safety level is SIL 3: Once or more per month
- If the system safety level is lower than SIL 3: Once or more per year

Important

If the following states occur, check if the cause is on the SERVOPACK end.

- When the /HWBB1 and /HWBB2 signals are turned OFF, the panel display or digital operator does not display Hbb.
- When the /HWBB1 and /HWBB2 signals are turned OFF, the EDM1 signal does not turn ON.

If the cause is found on the SERVOPACK end, the SERVOPACK may be faulty.

12.6 Connecting a Safety Function Device

Use the following procedure to connect a Safety Function device.

1. **Remove the safety jumper connector from the connector for the Safety Function device (CN8).**

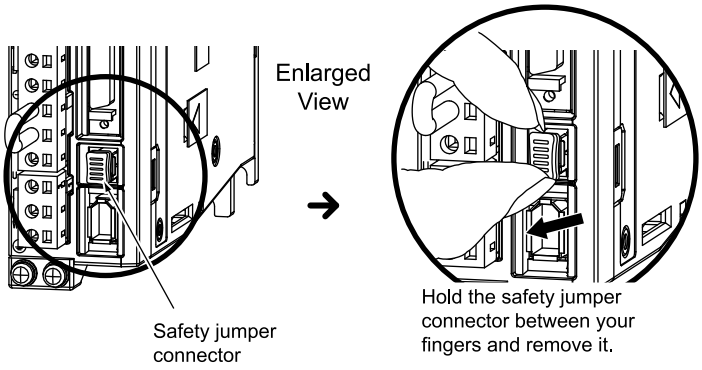

2. **Connect the Safety Function device to the connector for the Safety Function device (CN8).**

Note:

If you do not connect a Safety Function device, leave the safety jumper connector connected to the connector for the Safety Function device (CN8). If the SERVOPACK is used without the safety jumper connector connected to CN8, no current will be supplied to the servomotor and no motor torque will be output.

In this case, Hbb will be displayed on the panel display or digital operator.

12.7 Advanced Safety Module

If you are connecting the advanced safety module (Model number: SGDXS-OSA□□□) to this product, you will be able to use not only the safety functions built-into the SERVOPACK, but also the wide variety of safety functions that the advanced safety module has.

For details regarding the advanced safety module, refer to the following manual.

- Σ-X-Series AC Servo Drive Advanced Safety Module with Safety over EtherCAT (FSoE) Communications References Product Manual (Manual No.: SIEP C710812 25)
- Σ-X-Series AC Servo Drive Advanced Safety Module Digital I/O Product Manual (Manual No.: SIEP C710812 26)

13

EtherCAT Communications

This chapter provides basic information on EtherCAT communications.

13.1 Introduction to EtherCAT 582
13.1.1 Introduction to CANopen 582
13.1.2 CANopen over EtherCAT OSI Model 582
13.1.3 Sending and Receiving Data in EtherCAT Communications 583
13.1.4 EtherCAT Terminology 583
13.1.5 Data Type 584
13.1.6 Data Units 584
13.1.7 Subindex Number Notation 584

13.2 EtherCAT Slave Information 585

13.3 EtherCAT State Machine 586

13.4 EtherCAT Communications Settings 588
13.4.1 Explicit Device Identification 588
13.4.2 Normal Device Recognition Process at Startup 588

13.5 PDO Mappings 589
13.5.1 Setting Procedure for PDO Mappings 589
13.5.2 Default PDO Mappings 590

13.6 Synchronization with Distributed Clocks 591
13.6.1 Example of PDO Data Exchange Timing in DC Mode 592

13.7 Emergency Messages 594

13.1 Introduction to EtherCAT

The CANopen over EtherCAT communications reference SERVOPACKs implement the CiA 402 CANopen drive profile for EtherCAT communications (real-time Ethernet communications).

Basic position, speed, and torque control are supported along with synchronous position, speed, and torque control. You can select the type of control to match your system from basic positioning to high-speed, high-precision path control.

You can also use EtherCAT communications to control the high-level servo control performance, advanced turning functions, and many actuators of the Σ-X series.

13.1.1 Introduction to CANopen

The CiA 402 CANopen profile is based on the IEC 61800-7-1, IEC 61800-7-201, and IEC 61800-7-301 standards for international standardization of drive control and operation control.

13.1.2 CANopen over EtherCAT OSI Model

The OSI model implemented by the SERVOPACKs consists of three layers: the application layer (CANopen), the data link layer (EtherCAT), and the physical layer (Ethernet). The four layers other than the application layer, data link layer, and physical layer are not used. The data link layer is implemented with EtherCAT communications and the application layer is implemented with the DS402 CANopen drive profile.

This manual describes mainly the specifications of the application layer implemented in the SERVOPACKs. For detailed information on the data link layer (EtherCAT), refer to documentation provided by the EtherCAT Technology Group.

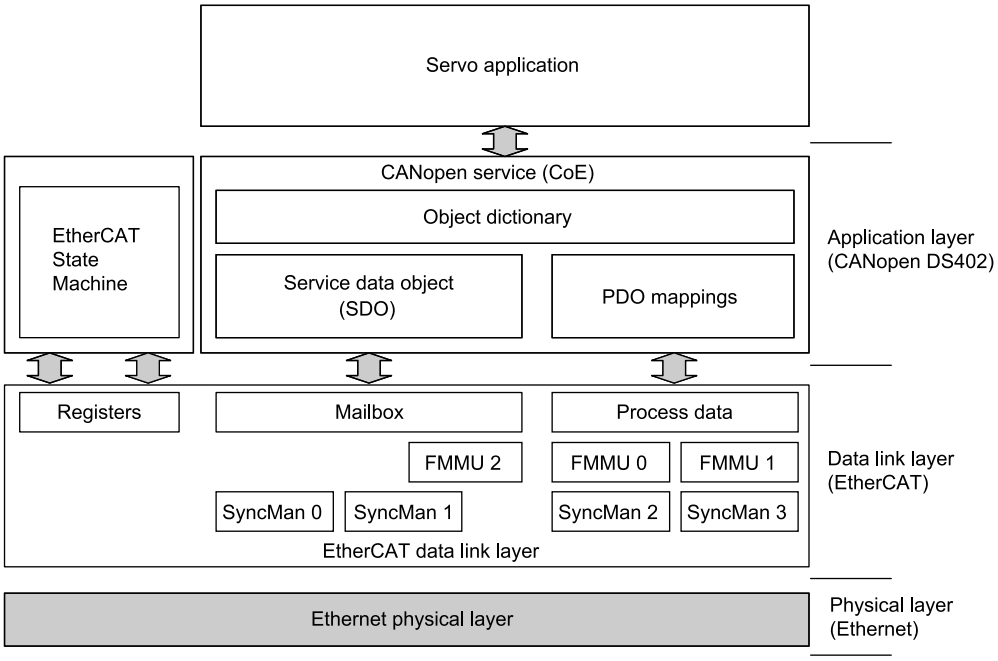

The object dictionary in the application layer includes parameters, application data, and PDO mapping information between the master and slaves.

The process data objects (PDOs) consist of the objects in the object dictionary that can be mapped to PDO mappings. The PDO mappings define the structure and contents of the process data.

13.1.3 Sending and Receiving Data in EtherCAT Communications

Objects are used to send and receive data in EtherCAT communications.

Reading and writing object data is performed in process data communications (PDO service), which transfers data cyclically, and in mailbox communications (SDO service), which transfers data non-cyclically.

Process data communications are used to read and write PDOs. Mailbox communications (SDO) are used to read and write object dictionary data entries.

13.1.4 EtherCAT Terminology

The EtherCAT and CANopen terms that are used in this manual are described in the following table.

Term	Abbreviation	Description
CAN in Automation	CiA	A non-profit organization established in 1992 as a joint venture between companies to provide CAN technical information, product information, and marketing information.
Controller Area Network	CAN	Communications standard for the physical layer and data link layer established for automotive LANs. It was established as an international standard as ISO 11898.
CANopen	CANopen	An upper-layer protocol based on the international CAN standard (EN 50325-4). It consists of profile specifications for the application layer, communications, applications, devices, and interfaces.
CANopen over EtherCAT	CoE	A network that uses Ethernet for the physical layer, EtherCAT for the data link layer, and CANopen for the application layer in a seven-layer OSI reference model.
Distributed Clocks	DC	A clock distribution mechanism that is used to synchronize the EtherCAT slaves with the EtherCAT master.
Electrically Erasable Programmable Read Only Memory	EEPROM	A ROM that can be electrically overwritten.
EtherCAT Slave Controller	ESC	A hardware chip that processes EtherCAT communications (such as loopbacks) and manages the distributed clock.
EtherCAT State Machine	ESM	A state machine in which the state of EtherCAT (the data link layer) changes according to transition conditions.
EtherCAT Technology Group	ETG	An international organization established in 2003 to provide support for developing EtherCAT technologies and to promote the spread of EtherCAT technologies.
Ethernet for Control Automation Technology	EtherCAT	An open network developed by Beckhoff Automation.
Fieldbus Memory Management Unit	FMMU	A unit that manages fieldbus memory.
INIT	INIT	The Init state in the EtherCAT state machine.
OPERATIONAL	OP	The Operational state in the EtherCAT state machine.
Object Dictionary	OD	A group of objects and structure supported by an EtherCAT SERVOPACK.
Process Data Object	PDO	Objects that are sent and received in cyclic communications.
Process Data Object Mapping	PDO mapping	Definitions of the applications objects that are sent with PDOs.
Service Data Object	SDO	Objects that are sent and received in mailbox communications.
PRE-OPERATIONAL	PREOP	The Pre-operational state in the EtherCAT state machine.
Process data	–	The data contained in application objects that are cyclically transferred for measurements or controls.
Safety over EtherCAT	FSoE	Communications protocol that intermingles safety control data in EtheCAT communication paths.

Continued on next page.

Continued from previous page.

Term	Abbreviation	Description
SyncManager	–	The ESC unit that coordinates data exchange between the master and slaves.
Receive Process Data Object	RXPDO	The process data received by the ESC.
Transmit Process Data Object	TXPDO	The process data sent by the ESC.

13.1.5 Data Type

The following table lists the data types and ranges that are used in this manual.

Code	Data Type	Range
SINT	Signed 8-bit integer	-128 to +127
INT	Signed 16-bit integer	-32768 to +32767
DINT	Signed 32-bit integer	-2147483648 to +2147483627
USINT	Unsigned 8-bit integer	0 to 255
UINT	Unsigned 16-bit integer	0 to 65,535
UDINT	Unsigned 32-bit integer	0 to 4294967295
STRING	Character string	–

13.1.6 Data Units

The following table lists the data units and notations that are used in this manual.

Notation	Description
Pos. unit	The user-defined position reference unit that is set in Position User Unit (2701h). 1 [Pos. unit] = 2701h: 1/2701h: 2 [inc]
Vel. unit	The user-defined speed reference unit that is set in Velocity User Unit (2702h). 1 [Vel. unit] = 2702h: 1/2702h: 2 [inc/s]
Acc. unit	The user-defined acceleration reference unit that is set in Acceleration User Unit (2703h). 1 [Acc. unit] = 2703h: 1/2703h: 2×10^4 [inc/s^2]
Trq. unit	The user-defined torque reference unit that is set in Torque User Unit (2704h). 1 [Trq. unit] = 2704h: 1/2704h: 2 [%]
inc	This is the encoder pulse unit. For a 26-bit encoder, the resolution is 67108864 [inc] per rotation.

13.1.7 Subindex Number Notation

Certain objects have subindexes.

If ":" follows an index number in this manual, the number that comes after ":" is the subindex number.

- Notation Example

2701h: 1

This example means subindex 1 of index number 2701h.

13.2 EtherCAT Slave Information

You can use an EtherCAT slave information file (XML) to configure the EtherCAT master.

The XML file contains general information on EtherCAT communications settings that are related to the SERVOPACK settings.

The following file is provided for the SERVOPACK. Use the most recent file.

SERVOPACK	File Name
SGDXS-□□□□A0□	Yaskawa_SGDXS-xxxxA0x.xml

13.3 EtherCAT State Machine

The EtherCAT state machine is used to manage the communications states between the master and slave applications when EtherCAT communications are started and during operation, as shown in the following figure. Normally, the state changes for requests from the master.

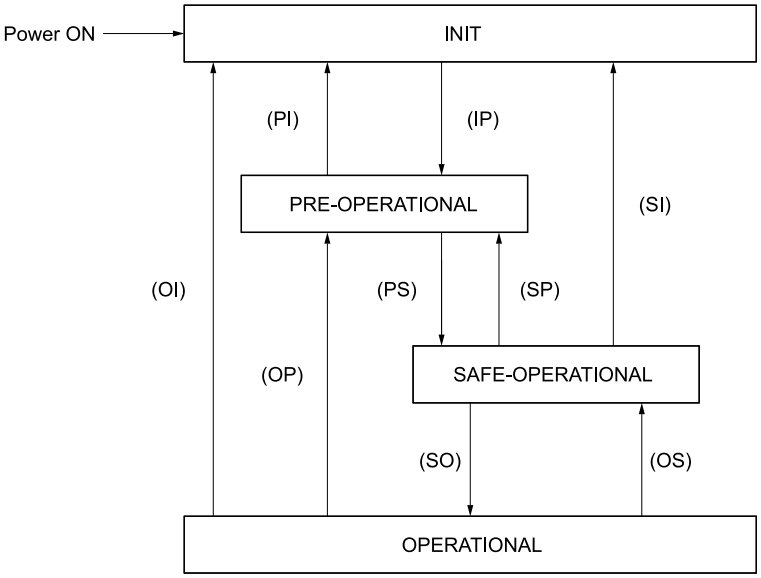

State	Description
INIT	• Mailbox communications are not possible. • Process data communications are not possible.
INIT => PRE-OP	• The master sets the DL address and Sync Manager channels for mailbox communications. • The master initializes DC clock synchronization. • The master requests the Pre-Operational state. • The master sets the AL control register. • The slaves check whether the mailbox was initialized correctly.
PRE-OPERATIONAL (PREOP)	• Mailbox communications are possible. • Process data communications are not possible.
PREOP => SAFEOP	• The master sets the Sync Manager channels and FMMU channels for process data. • The master uses SDOs to set the PDO mappings and the Sync Manager PDO Assignment parameters. • The master requests the Pre-Operational state. • The slaves check whether the Sync Manager channels for process data communications and, if required, the distributed clock settings are correct.
SAFE-OPERATIONAL (SAFEOP)	• Mailbox communications are possible. • Process data communications are possible. However, only the input data is valid. The output data is still not valid.
SAFEOP => OP	• The master sends valid output data. • The master requests the Operational state.
OPERATIONAL (OP)	• Mailbox communications are possible. • Process data communications are possible.

Information

For SDO and PDO communications through the EtherCAT data link layer, the FMMUs and Sync Managers must be set as follows:

• Sync Manager Settings

Sync Manager	Assignment (Fixed)	Size	Start Address (Fixed)
Sync Manager 0	Assigned to Receive Mailbox	128 bytes (fixed)	0x1000
Sync Manager 1	Assigned to Transmit Mailbox	128 bytes (fixed)	0x1080
Sync Manager 2	Assigned to Receive PDOs	0 to 64 bytes	0x1100
Sync Manager 3	Assigned to Transmit PDOs	0 to 64 bytes	0x1400

• FMMU Settings

FMMU	Setting
FMMU 0	Mapped in receive PDO (RxPDO) area.
FMMU 1	Mapped in transmit PDO (TxPDO) area.
FMMU 2	Mapped to the mailbox status.

13.4 EtherCAT Communications Settings

You can use the ID selector (S1 and S2) settings to identify the SERVOPACK.

Refer to the following section for details on identifying the SERVOPACK using the ID selector (S1 and S2).

☞ *13.4.1 Explicit Device Identification on page 588*

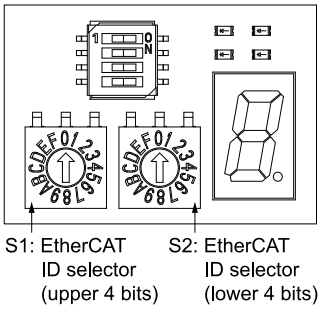

13.4.1 Explicit Device Identification

The following figure shows the requesting ID mechanism that performs SERVOPACK identification.

Refer to the documentation published by the EtherCAT Technology Group (ETG) for more information.

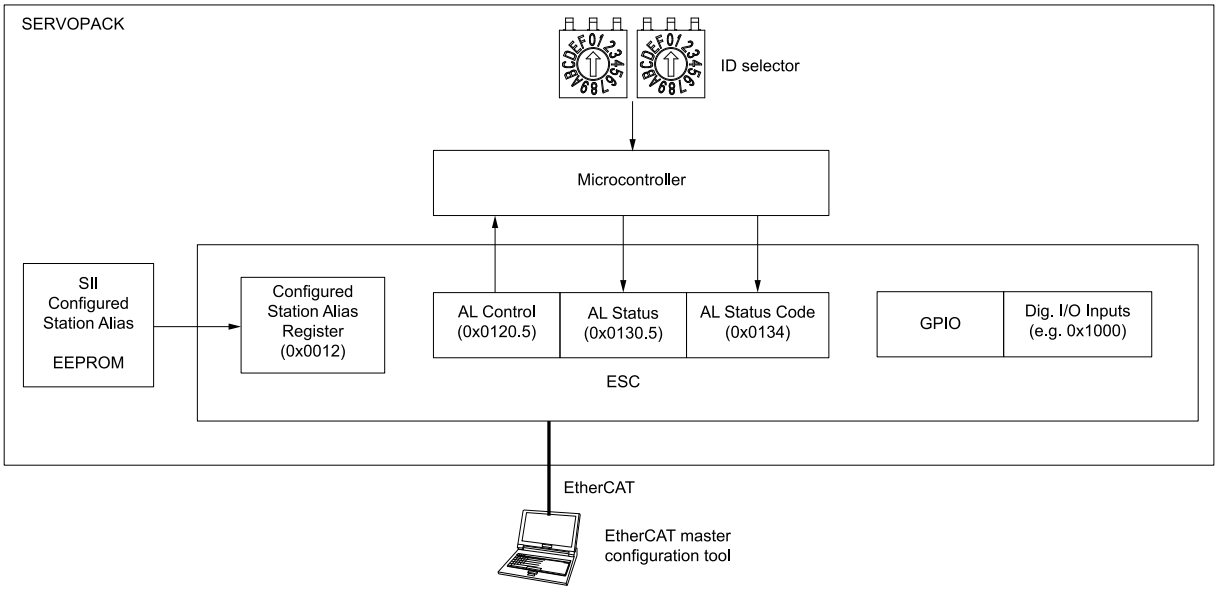

13.4.2 Normal Device Recognition Process at Startup

When communications are started, the master uses Auto Increment Addressing to detect the slaves. The Identity objects read from the slaves are compared with the master configuration information (set in advance with an EtherCAT configuration tool). Therefore, the slaves must normally be connected in the network in the same order as they appear in the master configuration. However, different network topologies are permitted if you use Explicit Device Identification.

13.5 PDO Mappings

The process data that is used in process data communications is defined in the PDO mappings. PDO mappings are definitions of the applications objects that are sent with PDOs.

The PDO mapping tables are in indexes 1600h to 1603h for the RxPDOs and indexes 1A00h to 1A03h for the TxPDOs in the object dictionary.

The following figure shows an example of PDO mappings.

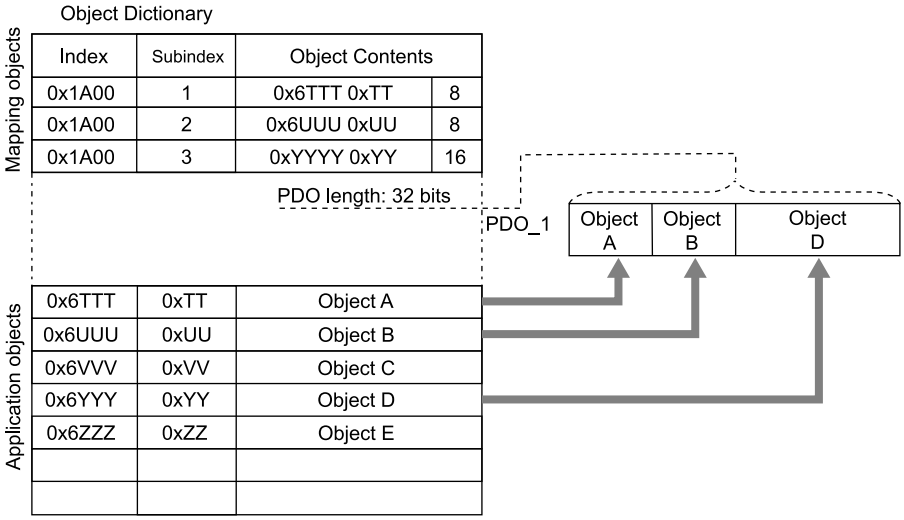

In addition to the above PDO mappings, PDOs have to be assigned to the Sync Managers to exchange EtherCAT process data.

The Sync Manager PDO assignment objects (1C12h and 1C13h) establish the relationship between these PDOs and the Sync Managers.

The following figure shows an example of a Sync Manager and the PDO mappings.

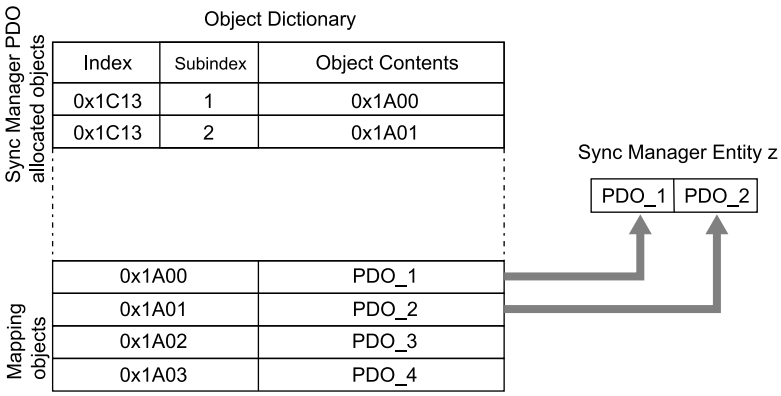

⚠ CAUTION

The PDO mapping objects (indexes 1600h to 1603h and 1A00h to 1A03h) and the Sync Manager PDO assignment objects (index 1C12h and 1C13h) can be written only in Pre-Operational state.

13.5.1 Setting Procedure for PDO Mappings

1. **Disable the assignments between the Sync Manager and PDOs.**

   (Set subindex 0 of objects 1C12h to 1C13h to 0.)

2. **Set all of the mapping entries for the PDO mapping objects.**

   The objects you must configure as shown below.

   - 1600h to 1603h, 1A00h to 1A03h

3. **Set the number of mapping entries for all PDO mapping objects (= subindex 0 of the above objects).**
4. **Set the assignments between the Sync Manager and PDOs (= subindexes 1 and 2 of objects 1C12h to 1C13h).**
5. **Enable the assignments between the Sync Manager and PDOs (= set subindex of objects 1C12h to 1C13h to 0).**

Note:

Subindex 0 of 1C12h and 1C13h can be set to any value, but the number of mapping entries for each cannot exceed 16 entries (64 bytes).

13.5.2 Default PDO Mappings

The following table shows the default PDO mappings for the SERVOPACK.

The defaults are defined in the EtherCAT slave information file (XML).

- 1st PDO Mapping (Position, Velocity, Torque, Torque Limit, Touch Probe)

RxPDO (1600h)	Control-word (6040h)	Target Position (607Ah)	Target Velocity (60FFh)	Target Torque (6071h)	Max. Torque (6072h)	Mode of Operation (6060h)	Padding (8 bits)	Touch Probe Function (60B8h)

TxPDO (1A00h)	Statusword (6041h)	Position Actual Value (6064h)	Torque Actual Value (6077h)	Following Error Actual Value (60F4h)	Mode of Operation Display (6061h)	Padding (8 bits)	Touch Probe Status (60B9h)	Touch Probe 1 Positive Edge (60BAh)

- 2nd PDO Mapping (Cyclic Synchronous Position): Default PDO Assignments

RxPDO (1601h)	Control-word (6040h)	Target Position (607Ah)

TxPDO (1A01h)	Statusword (6041h)	Position Actual Value (6064h)

- 3rd PDO Mapping (Cyclic Synchronous Velocity)

RxPDO (1602h)	Control-word (6040h)	Target Velocity (60FFh)

TxPDO (1A02h)	Statusword (6041h)	Position Actual Value (6064h)

- 4th PDO Mapping (Cyclic Synchronous Torque)

RxPDO (1603h)	Control-word (6040h)	Target Torque (6071h)

TxPDO (1A03h)	Statusword (6041h)	Position Actual Value (6064h)	Torque Actual Value (6077h)

13.6 Synchronization with Distributed Clocks

The synchronization of EtherCAT communications is based on a mechanism called a distributed clock.

With the distributed clock, all devices are synchronized with each other by sharing the same reference clock.

The slave devices synchronize the internal applications to the Sync0 events that are generated according to the reference clock.

You can use the following synchronization modes with EtherCAT.

You can change the synchronization mode in the Sync Control registers (ESC registers 0x980 and 0x981).

- Free-Run (ESC register 0x980 = 0x0000)
  In free-run mode, the local cycle is independent from the communications cycle and master cycle.
- DC Mode (ESC register 0x980 = 0x0300)
  In this mode, the SERVOPACK is synchronized with the host controller (master) on the Sync0 event.

The following figure gives a timing chart for DC synchronization.

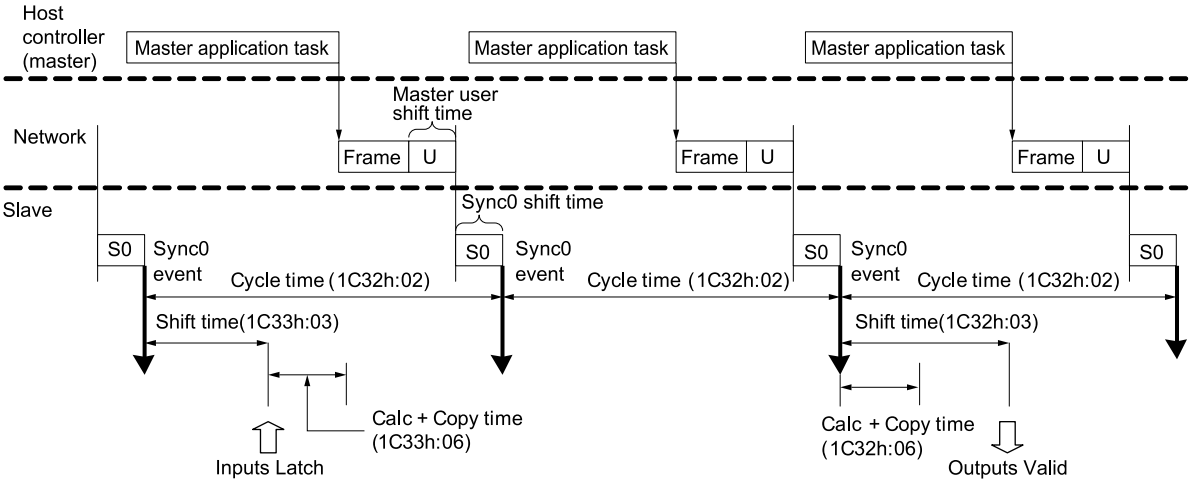

Index	Subindex	Name	Access	PDO Mapping	Data Type	Setting Value
1C32h	Sync Manager 2 (process data output) Synchronization					
	1	Synchronization type	RO	No	UINT	Current status of DC mode 0: Free-Run (DC not used, no PDO mapping) 1: Free-Run (DC not used, with PDO mapping) 2: DC Sync0 (DC used)
	2	Cycle time	RO	No	UDINT	Sync0 event cycle [ns] (The value is set by the master via an ESC register.) Range and setting increment: 62500 × n (n = 1 to 64)
	3	Shift time	RW	No	UDINT	The time between the Sync0 event and Outputs Valid (i.e., the time from Sync0 until the output data is input to the SERVOPACK). (unit: ns) Range: 62500 to Sync0 event cycle Setting increment: 62500 × n (n = 1 to)
	6	Calc and copy time	RO	No	UDINT	The time from the Sync0 event until the output data from Sync Manager 2 is read. (unit: ns) 62500 (fixed)
1C33h	Sync Manager 3 (process data input) Synchronization					
	3	Shift time	RW	No	UDINT	The time between the Sync0 event and Inputs Latch (i.e., when the input data is obtained from the SERVOPACK). (unit: ns) Range: 0 to (Sync0 event cycle - 62500) Setting increment: 62500 × n (n = 1 to)
	6	Calc and copy time	RO	No	UDINT	The time for copying the input process data to the Sync Manager 3 area. (unit: ns) 62500 (fixed)

13.6.1 Example of PDO Data Exchange Timing in DC Mode

- DC Cycle Time = 1 ms, Input Shift Time = 500 µs, Output Shift Time = 500 µs

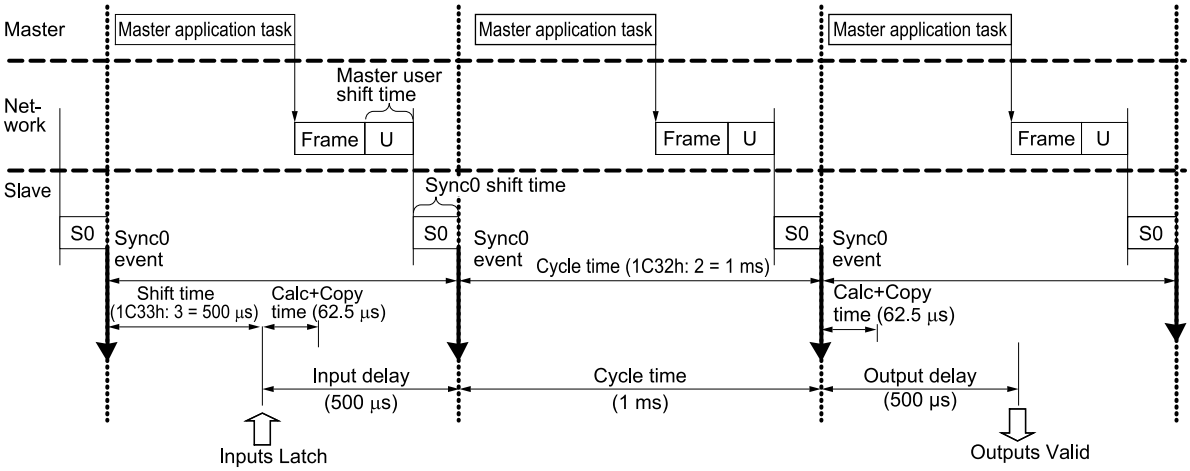

- DC Cycle Time = 62.5 µs, Input Shift Time = 0 µs, Output Shift Time = 62.5 µs

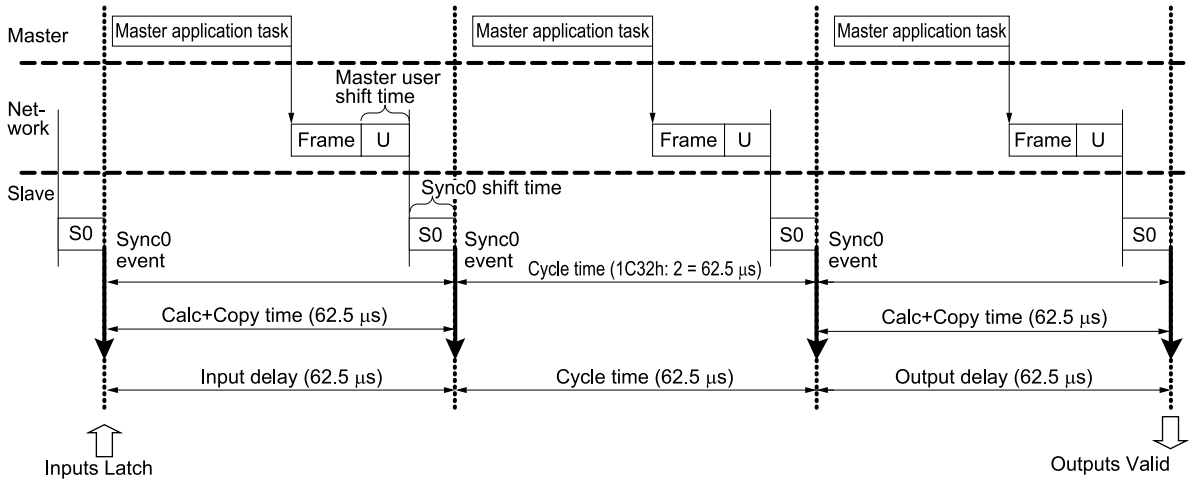
Master
Master application task
Master application task
Master application task
Master user shift time
Net-work
Frame
U
Frame
U
Frame
U
Slave
Sync0 shift time
S0
Sync0 event
S0
Sync0 event
S0
Sync0 event
S0
Cycle time (1C32h: 2 = 62.5 μs)
Calc+Copy time (62.5 μs)
Calc+Copy time (62.5 μs)
Input delay (62.5 μs)
Cycle time (62.5 μs)
Output delay (62.5 μs)
Inputs Latch
Outputs Valid

13.7 Emergency Messages

Emergency messages are triggered by alarms and warnings detected within the SERVOPACK. They are sent via the mailbox interface.

An emergency message consists of eight bytes of data as shown in the following table.

Byte	0	1	2	3	4	5	6	7
Description	Emergency Error Code (FF00h) *1		Error Register (object 1001h)	Reserved.	Manufacturer-specific error field			
					SERVOPACK alarm/warning code *2		Reserved.	Reserved.

*1 The manufacturer-specific error code is always FF00h. If something other than FF00h is being used, refer to the documentation published by the EtherCAT Technology Group (ETG).

*2 Refer to the following chapters for details on SERVOPACK alarms and warning codes.

☞ *16 Maintenance on page 693*

14

CiA402 Drive Profile

14.1 Device Control 596
14.1.1 State Machine Control Commands 597
14.1.2 Bits in Statusword (6041h) 597
14.1.3 Related Objects 597

14.2 Modes of Operation 599
14.2.1 Related Objects 599
14.2.2 Dynamic Mode Changes 599

14.3 Position Control Modes 600
14.3.1 Profile Position Mode 600
14.3.2 Interpolated Position Mode 603
14.3.3 Cyclic Synchronous Position Mode 607

14.4 Homing 609
14.4.1 Related Objects 609
14.4.2 Homing Method (6098h) 609

14.5 Velocity Control Modes 612
14.5.1 Profile Velocity Mode 612
14.5.2 Cyclic Synchronous Velocity Mode 613

14.6 Torque Control Modes 614
14.6.1 Profile Torque Mode 614
14.6.2 Cyclic Sync Torque Mode 615

14.7 Torque Limits 616
14.7.1 Related Objects 616

14.8 Digital I/O Signals 617

14.9 Touch Probe 618
14.9.1 Related Objects 618
14.9.2 Example of Execution Procedure for a Touch Probe 618

14.10 Fully-Closed Loop Control 620

14.1 Device Control

You use the Controlword (6040h) to execute device control for the servo drive according to the following state transitions. You can use the Statusword (6041h) to monitor the device status of the servo drive.

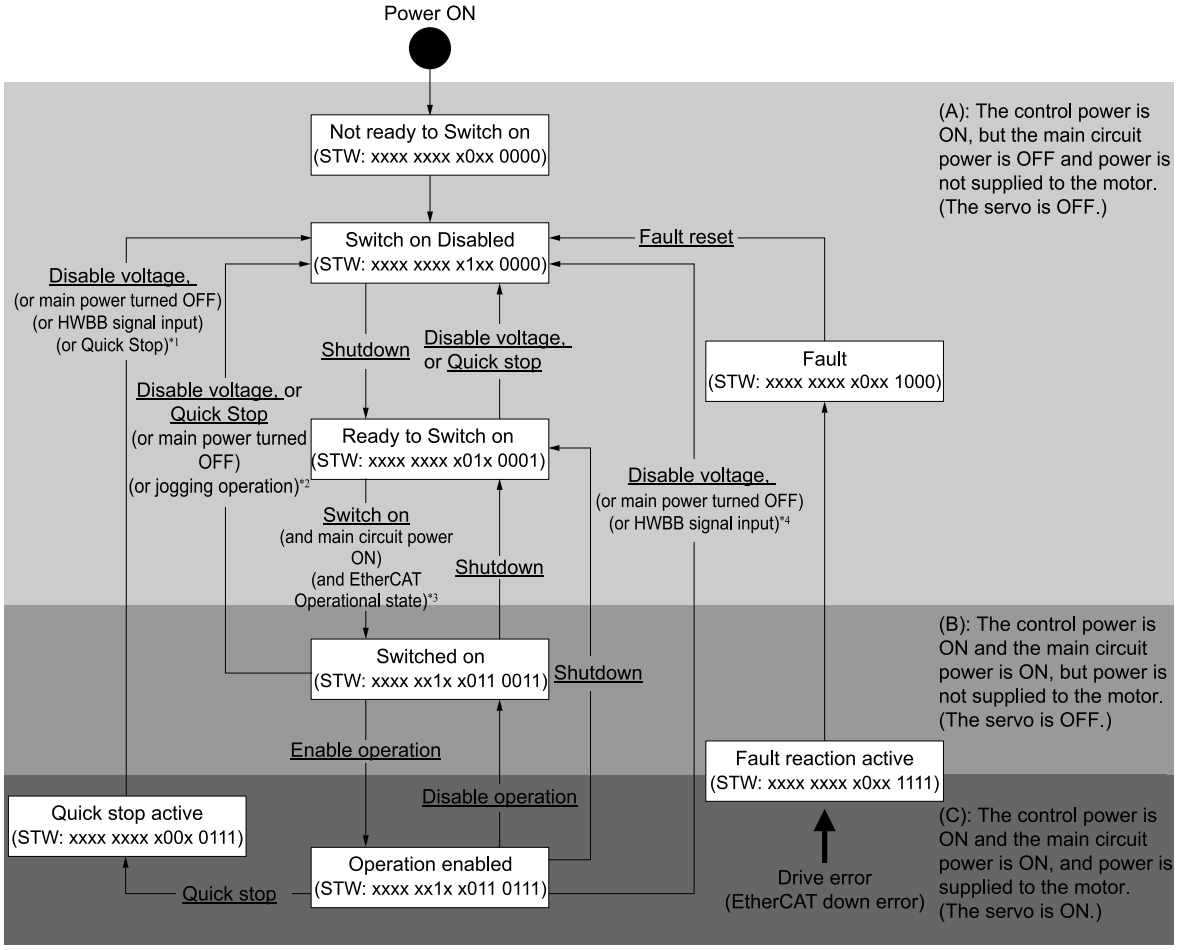

*1 In the Quick Stop Active state, the SERVOPACK automatically moves to the Switch ON Disabled state in the following cases:

- The main power was turned OFF.
- The HWBB signal was input.
- The motor was stopped.

*2 In the Switched ON state, the SERVOPACK automatically moves to the Switch ON Disabled state in the following cases:

- The main power was turned OFF.
- Motor operation was already enabled by the digital operator or the SigmaWin+.

*3 In the Ready to Switch ON state, the SERVOPACK moves to the next state in the following cases:

- The main circuit power is ON.
- The EtherCAT state machine (ESM) is in the Operational state.
- The servomotor is not being operated by the digital operator or the SigmaWin+.

*4 In the Operation Enabled state, the SERVOPACK automatically moves to the Switch ON Disabled state in the following cases:

- The main power was turned OFF.
- The HWBB signal was input.

Note:

- ☐ indicates that the servo is ON.
- STW indicates the Statusword (6041h).
- _____: Underlines indicate control commands in the Controlword (6040h).

14.1.1 State Machine Control Commands

Command	Bits in Controlword (6040h)				
	Bit 7	Bit 3	Bit 2	Bit 1	Bit 0
Shutdown	0	–	1	1	0
Switch ON	0	0	1	1	1
Switch on + Enable operation	0	1	1	1	1
Disable Voltage	0	–	–	0	–
Quick Stop	0	–	0	1	–
Disable Operation	0	0	1	1	1
Enable Operation	0	1	1	1	1
Fault Reset	0 → 1	–	–	–	–

14.1.2 Bits in Statusword (6041h)

Bit	Data Description	Remarks
0	Ready to Switch ON	Refer to the following chapter for details. ☞ *15.6 Device Control on page 661*
1	Switched ON	
2	Operation Enabled	
3	Fault	
4	Voltage Enabled	
5	Quick Stop	
6	Switch ON Disabled	
7	Warning	
8	Reserved	
9	Remote	
10	Target Reached	
11	Internal Limit Active	
12	Operation Mode Specific	
13		
14	Torque Limit Active	
15	Safety Active	

14.1.3 Related Objects

Index	Subindex	Name	Data Type	Access	PDO Mapping	Value	Saving to EEPROM
6040h	0	Controlword	UINT	RW	Yes	0 to 0xFFFF (default: 0)	No
6041h	0	Statusword	UINT	RO	Yes	–	No
605Ah	0	Quick Stop Option Code	INT	RW	No	0 to 4 (default: 2)	Yes

Continued on next page.

Continued from previous page.

Index	Subindex	Name	Data Type	Access	PDO Mapping	Value	Saving to EEPROM
605Bh	0	Shutdown Option Code	INT	RW	No	0 to 1 (default: 0)	Yes
605Ch	0	Disable Operation Option Code	INT	RW	No	0 to 1 (default: 1)	Yes
605Dh	0	Halt Option Code	INT	RW	No	-3 to 3 (default: 1)	Yes
605Eh	0	Fault Reaction Option Code	INT	RW	No	0 to 0 (default: 0)	Yes

14.2 Modes of Operation

The SERVOPACK supports the following modes of operation.

- Profile Position Mode
- Homing Mode
- Interpolated Position Mode
- Profile Velocity Mode
- Torque Profile Velocity Mode
- Cyclic Sync Position Mode
- Cyclic Sync Velocity Mode
- Cyclic Sync Torque Mode

14.2.1 Related Objects

Index	Subindex	Name	Data Type	Access	PDO Mapping	Value	Saving to EEPROM
6060h	0	Modes of Operation	SINT	RW	Yes	0 to 10 (default: 0)	Yes
6061h	0	Modes of Operation Display	SINT	RO	Yes	0	No
6502h	0	Supported Drive Modes	UDINT	RO	No	0x03ED	No

14.2.2 Dynamic Mode Changes

You can change the operation mode with Modes of Operation (6060h). The master must update all operation mode-specific process data objects at the same time when it changes the operation mode during motor operation.

If the master selects a new operation mode, the SERVOPACK will change to the new operation mode immediately.

The following table describes operation when the operation mode is changed to a new mode.

New Operation Mode	Operation When Operation Mode Is Changed
Profile Position Mode	Controlword bit 4 = 0: The motor is stopped in the current position control mode. Controlword bit 4 = 1: A new positioning operation is started immediately.
Homing Mode	Controlword bit 4 = 0: The motor is stopped in the current position control mode. Controlword bit 4 = 1: Homing is started immediately.
Interpolated Position Mode	Controlword bit 4 = 0: The motor is stopped in the current position control mode. Controlword bit 4 = 1: A new positioning operation is started immediately.
Profile Velocity Mode	The new operation mode is started immediately.
Torque Profile Velocity Mode	The new operation mode is started immediately.
Cyclic Sync Position Mode	The new operation mode is started immediately.
Cyclic Sync Velocity Mode	The new operation mode is started immediately.
Cyclic Sync Torque Mode	The new operation mode is started immediately.

14.3 Position Control Modes

14.3.1 Profile Position Mode

The Profile Position Mode is used to position to the Target Position at the Profile Velocity and the Profile Acceleration.

The following figure shows the block diagram for the Profile Position Mode.

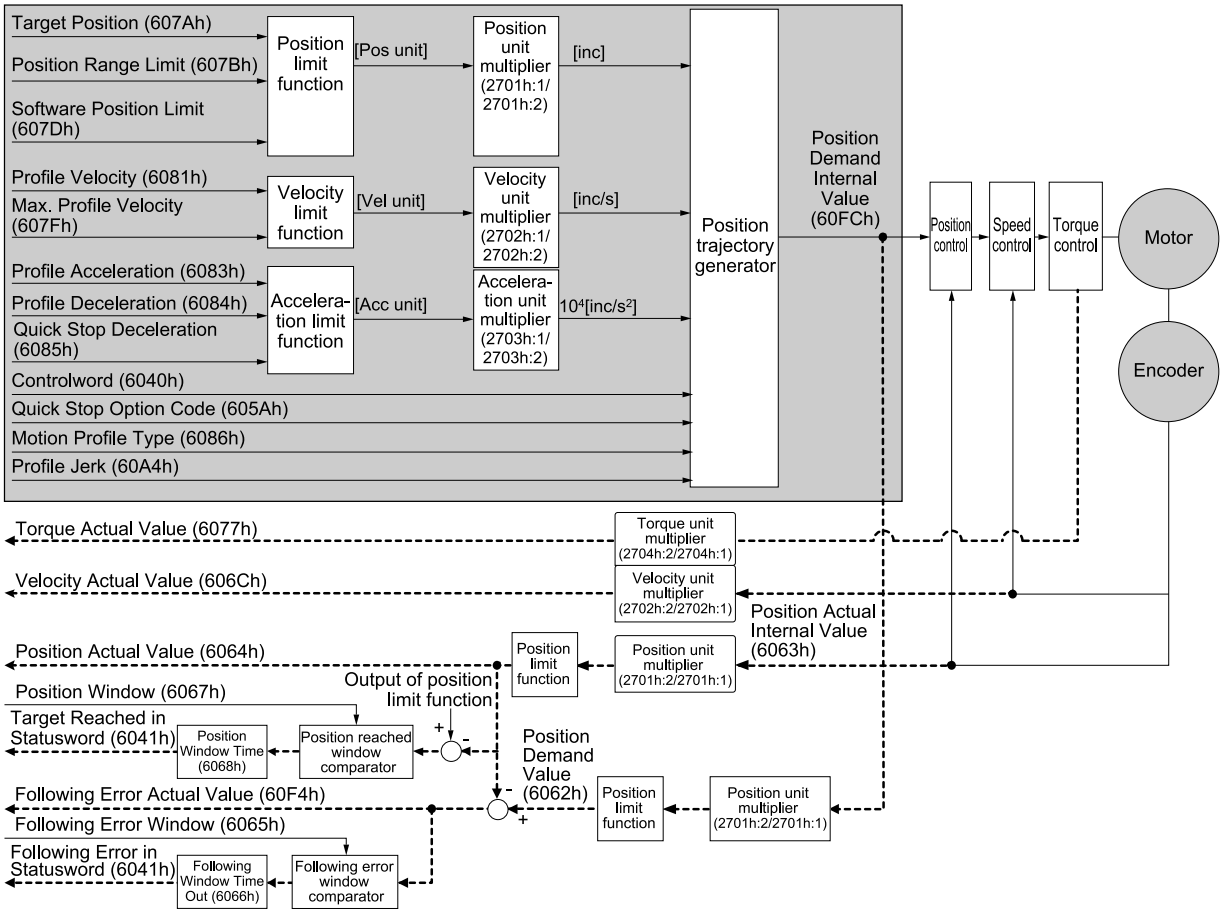

(1) Related Objects

Index	Subindex	Name	Data Type	Access	PDO Mapping	Value	Saving to EEPROM
6040h	0	Controlword	UINT	RW	Yes	0 to 0xFFFF (default: 0)	No
6041h	0	Statusword	UINT	RO	Yes	–	No
607Ah	0	Target Position	DINT	RW	Yes	-2147483648 to 2147483647 (default: 0) [Pos. unit]	No
607Bh	0	Number of entries	USINT	RO	No	2	No
	1	Min position range limit	DINT	RW	Yes	-2147483648 to 0 (default: 0) [Pos. unit]	Yes
	2	Max position range limit	DINT	RW	Yes	0 to 2147483647 (default: 0) [Pos. unit]	Yes

Continued on next page.

Continued from previous page.

Index	Subindex	Name	Data Type	Access	PDO Mapping	Value	Saving to EEPROM
607Dh	0	Number of entries	USINT	RO	No	2	No
	1	Min position limit	DINT	RW	No	-1073741823 to 1073741823 (default: 0) [Pos. unit]	Yes
	2	Max position limit	DINT	RW	No	-1073741823 to 1073741823 (default: 0) [Pos. unit]	Yes
607Fh	0	Max Profile Velocity	UDINT	RW	Yes	0 to 4294967295 (default: 2147483647) [Vel. unit]	Yes
6081h	0	Profile Velocity	UDINT	RW	Yes	0 to 4294967295 (default: 0) [Vel. unit]	Yes
6083h	0	Profile Acceleration	UDINT	RW	Yes	0 to 4294967295 (default: 1000) [Acc. unit]	Yes
6084h	0	Profile Deceleration	UDINT	RW	Yes	0 to 4294967295 (default: 1000) [Acc. unit]	Yes
6085h	0	Quick Stop Deceleration	UDINT	RW	Yes	0 to 4294967295 (default: 1000) [Acc. unit]	Yes
6086h	0	Motion Profile Type	INT	RW	Yes	-32768 to 32767 (default: 0)	Yes
60A4h	0	Number of entries	USINT	RO	No	1	No
	1	Profile jerk1	UDINT	RW	No	0 to 50 (default: 25) [%]	Yes

Set the target position (607Ah: Target Position) so that the travel distance (= travel amount from the position that is input to the position loop) is 2147483647(= $2^{31} - 1$) or less.

In the Profile Position Mode, the following two methods can be used to start positioning.

(a) Single Set Point (When Change Set Immediately Bit (Bit 5) in Controlword Is 1)

When a new command is input to the New Set Point Bit (bit 4) in Controlword during positioning, positioning for the new command is started immediately.

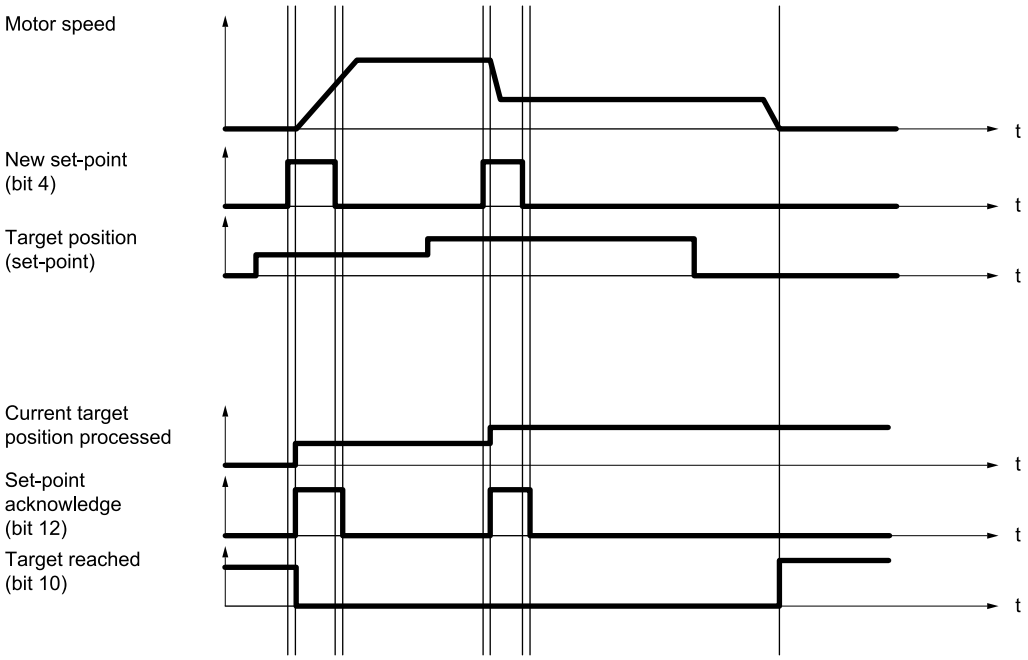

(b) Set of Set Points (When Change Set Immediately Bit (Bit 5) in Controlword Is 0)

When a new command is input in the New Set Point Bit (bit 4) in Controlword during positioning, positioning for the new command is started as soon as the current positioning operation is completed.

The dotted line in the following figure shows the actual speed if the Change of Set Point Bit (bit 9) is set to 1.

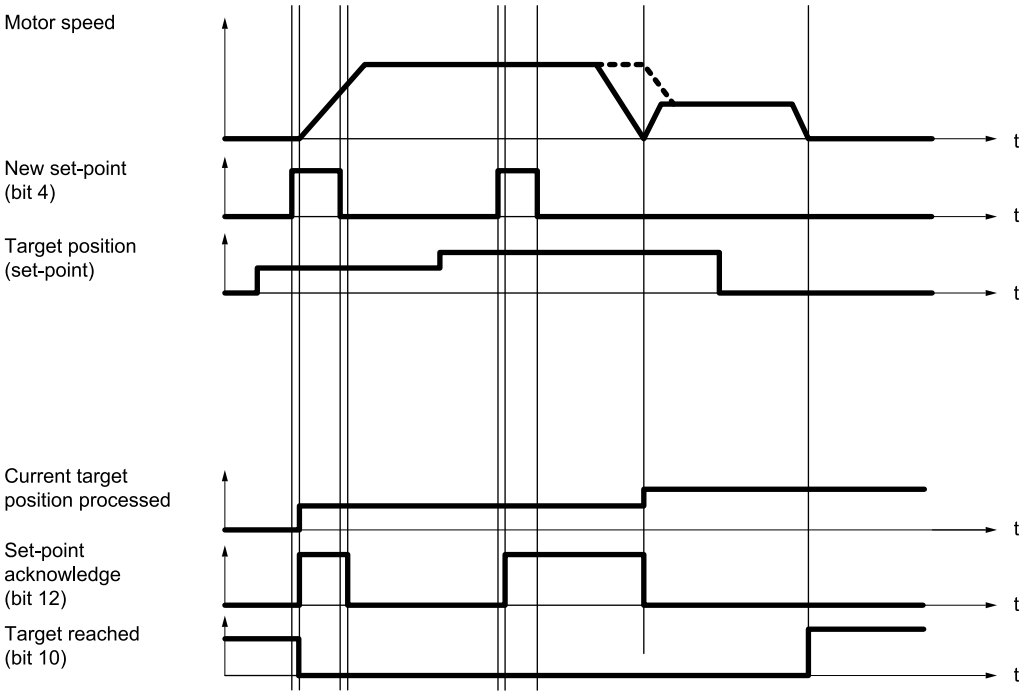

(c) SPOSING (S-curve Acceleration/Deceleration Positioning)

If you set Motion Profile Type to 2, S-curve acceleration/deceleration will be used for positioning to Target Position.

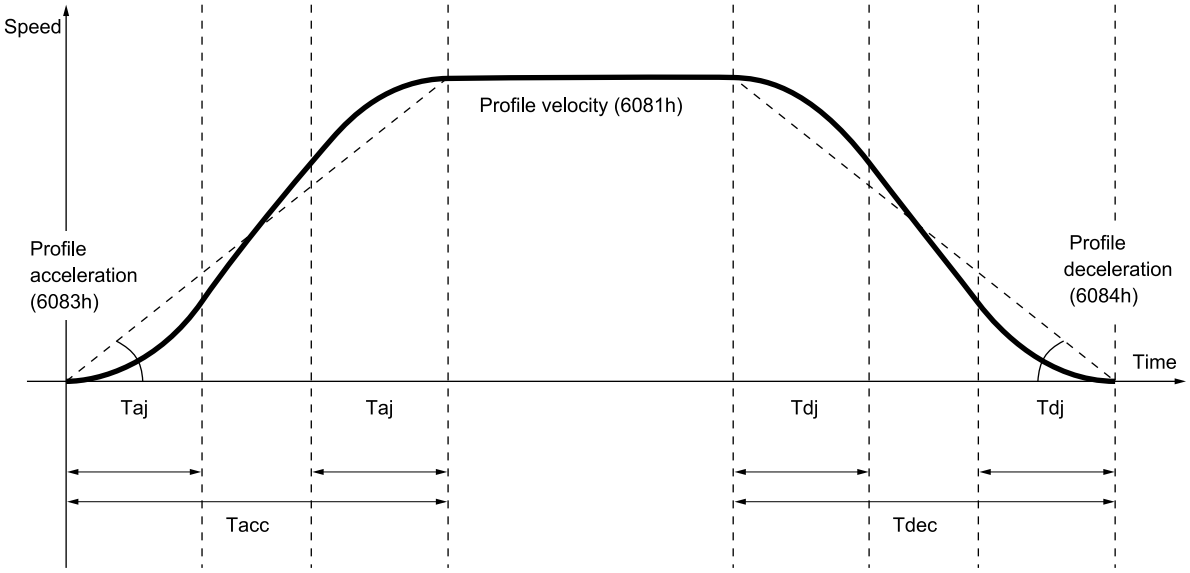

Acceleration time: Tacc = Profile velocity (6081h) / Profile acceleration (6083h)

S-curve acceleration time: Taj = Tacc × Profile jerk (60A4h)

Deceleration time: Tdec = Profile velocity (6081h) / Profile deceleration (6084h)

S-curve deceleration time: Tdj = Tdec × Profile jerk (60A4h)

Important

- If you change the Target Position (607Ah), Profile Velocity (6081h), Profile Acceleration (6083h), or Profile Deceleration (6084h), do so either while positioning is stopped or while positioning at a constant speed.
- Set the S-curve acceleration/deceleration time in Profile Jerk (60A4h).

14.3.2 Interpolated Position Mode

The Interpolated Position Mode is used to control multiple coordinated axes or to control a single axis that requires time interpolation of the set point data.

There are the following two submodes for the Interpolated Position Mode.

Interpolation submode select (60C0h) is used to change the submode.

Refer to the following chapter for details.

☞ *15.10 Interpolated Position Mode on page 677*

Interpolated Position Mode		Number of Data	Number of Profiles
Mode1	No position reference filter	1	1
	Position reference filter		
Mode2	No position reference filter	1 to 254	2
	Position reference filter		

(1) Mode1

This submode normally uses a time (communications) synchronization mechanism to synchronize the servo drives.

The Interpolation Time Period defines the update cycle of the Interpolation Data (i.e., the interpolation position). The interpolation processing in the SERVOPACK is based on this setting.

The Interpolation Data is interpreted as an absolute value.

The following figure shows the block diagram for mode 1.

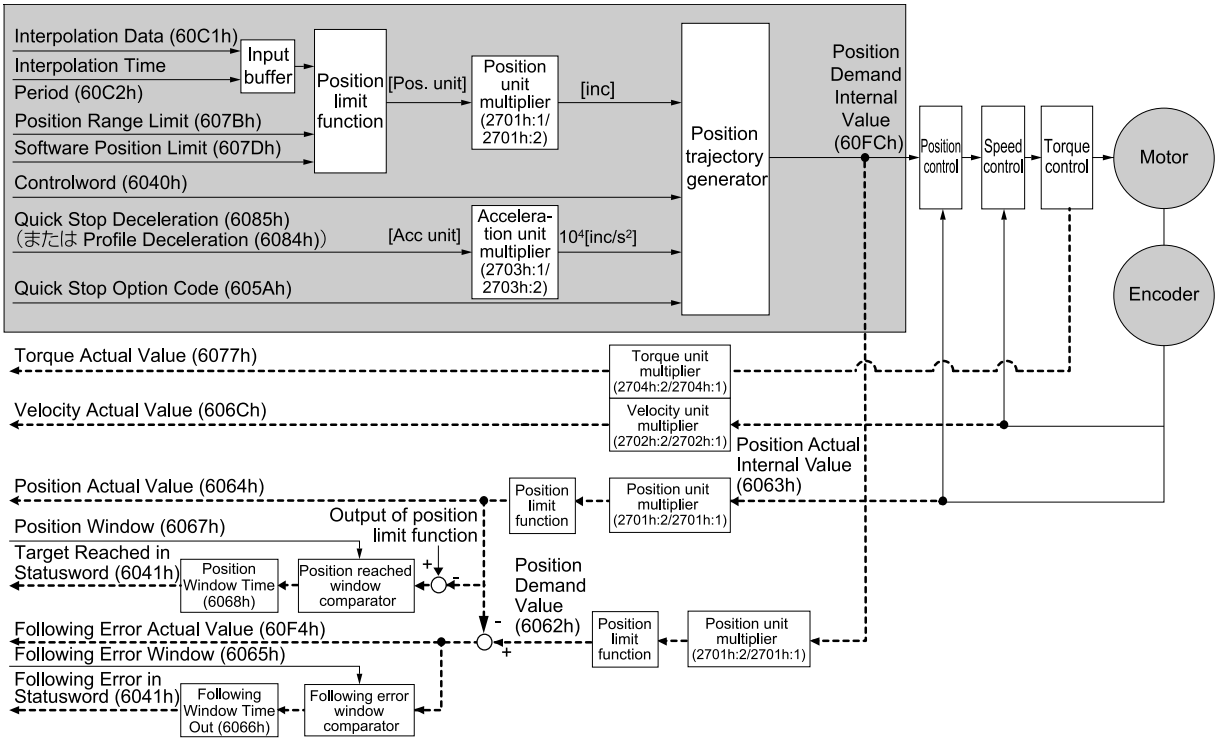

(a) Related Objects

Index	Subindex	Name	Data Type	Access	PDO Mapping	Value	Saving to EEPROM
6040h	0	Controlword	UINT	RW	Yes	0 to 0xFFFF (default: 0)	No
6041h	0	Statusword	UINT	RO	Yes	–	No

Continued on next page.

Continued from previous page.

Index	Subindex	Name	Data Type	Access	PDO Mapping	Value	Saving to EEPROM
60C1h	0	Number of entries	USINT	RO	No	1	No
	1	Interpolation data record	DINT	RW	Yes	-2147483648 to 2147483647 (default: 0) [Pos. unit]	No
60C2h	0	Number of entries	USINT	RO	No	2	No
	1	Interpolation time period value	USINT	RW	No	1 to 250 (default: 125)	No
	2	Interpolation time index	SINT	RW	No	-6 to -3 (default: -6)	No
607Bh	0	Number of entries	USINT	RO	No	2	No
	1	Min position range limit	DINT	RW	Yes	-2147483648 to 0 (default: 0) [Pos. unit]	Yes
	2	Max position range limit	DINT	RW	Yes	0 to 2147483647 (default: 0) [Pos. unit]	Yes
607Dh	0	Number of entries	USINT	RO	No	2	No
	1	Min position limit	DINT	RW	No	-1073741823 to 1073741823 (default: 0) [Pos. unit]	Yes
	2	Max position limit	DINT	RW	No	-1073741823 to 1073741823 (default: 0) [Pos. unit]	Yes
6084h	0	Profile Deceleration	UDINT	RW	Yes	0 to 4294967295 (default: 1000) [Acc. unit]	Yes
6085h	0	Quick Stop Deceleration	UDINT	RW	Yes	0 to 4294967295 (default: 1000) [Acc. unit]	Yes

(2) Mode2

This submode is used to perform interpolation feeding control for an individual axis. Unlike mode 1, mode 2 has reference input buffers (interpolation data record for 1st profile and interpolation data record for 2nd profile) that you can set to different interpolation positions (interpolation data record). The interpolation positions that are set in the reference input buffers are read each Interpolation Time Period to perform interpolation processing.

The following figure shows the block diagram for mode 2.

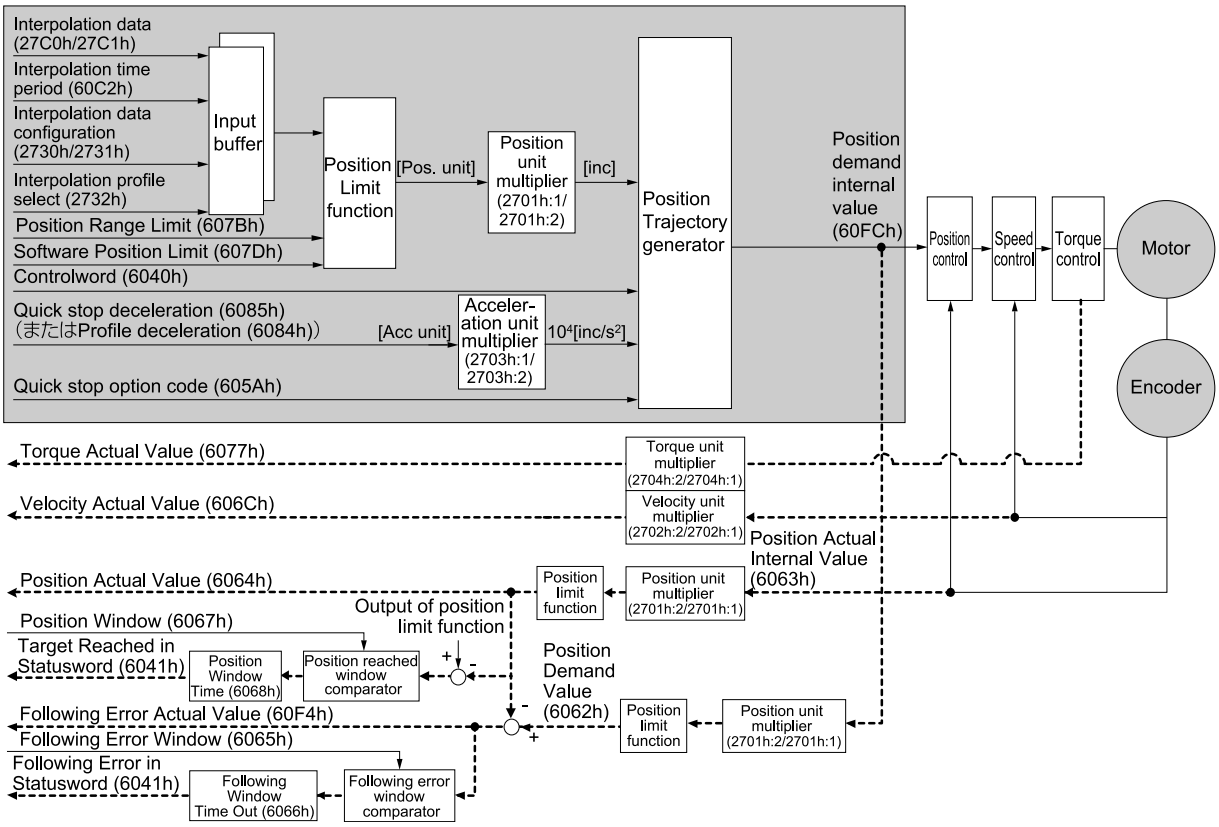

(a) Related Objects

Index	Subindex	Name	Data Type	Access	PDO Mapping	Value	Saving to EEPROM
6040h	0	Controlword	UINT	RW	Yes	0 to 0xFFFF (default: 0)	No
6041h	0	Statusword	UINT	RO	Yes	–	No
60C2h	0	Number of entries	USINT	RO	No	2	No
	1	Interpolation time period value	USINT	RW	No	1 to 250 (default: 125)	No
	2	Interpolation time index	SINT	RW	No	-6 to -3 (default: -6)	No
2730h	0	Number of entries	USINT	RO	No	9	No
	1	Maximum buffer size	UDINT	RO	No	254	No
	2	Actual buffer size	UDINT	RW	No	254	No
	3	Buffer organization	USINT	RW	No	0 to 1 (default: 0)	No
	4	Buffer position	UINT	RW	Yes	1 to 254 (default: 1)	No
	5	Size of data record	USINT	WO	No	1 to 1 (default: 1)	No
	6	Buffer clear	USINT	WO	No	0 to 1 (default: 0)	No
	7	Position data definition	USINT	RW	Yes	0 to 1 (default: 1)	No
	8	Position data polarity	USINT	RW	Yes	0 to 1 (default: 0)	No
	9	Behavior after reaching buffer position	USINT	RW	Yes	0 to 1 (default: 0)	No

Continued on next page.

Continued from previous page.

Index	Subindex	Name	Data Type	Access	PDO Mapping	Value	Saving to EEPROM
2731h	0	Number of entries	USINT	RO	No	9	No
	1	Maximum buffer size	UDINT	RO	No	254	No
	2	Actual buffer size	UDINT	RW	No	254	No
	3	Buffer organization	USINT	RW	No	0 to 1 (default: 0)	No
	4	Buffer position	UINT	RW	Yes	1 to 254 (default: 1)	No
	5	Size of data record	USINT	WO	No	1 to 1 (default: 1)	No
	6	Buffer clear	USINT	WO	No	0 to 1 (default: 0)	No
	7	Position data definition	USINT	RW	Yes	0 to 1 (default: 1)	No
	8	Position data polarity	USINT	RW	Yes	0 to 1 (default: 0)	No
	9	Behavior after reaching buffer position	USINT	RW	Yes	0 to 1 (default: 0)	No
2732h	0	Interpolation Profile Select	USINT	RW	Yes	0 to 1 (default: 0)	No
27C0h	0	Number of entries	USINT	RO	No	254	No
	1 to 254	1st set-point to 254 set-point	DINT	RW	No	-2147483648 to 2147483647 (default: 0)	No
27C1h	0	Number of entries	USINT	RO	No	254	No
	1 to 254	1st set-point to 254 set-point	DINT	RW	No	-2147483648 to 2147483647 (default: 0)	No
2741h	0	Number of entries	USINT	RO	No	2	No
	1	Interpolation data read pointer Position	UINT	RO	Yes	1 to 254 (default: –)	No
	2	Interpolation data write pointer Position	UINT	RO	Yes	1 to 254 (default: –)	No
607Bh	0	Number of entries	USINT	RO	No	2	No
	1	Min position range limit	DINT	RW	Yes	-2147483648 to 0 (default: 0) [Pos. unit]	Yes
	2	Max position range limit	DINT	RW	Yes	0 to 2147483647 (default: 0) [Pos. unit]	Yes
607Dh	0	Number of entries	USINT	RO	No	2	No
	1	Min position limit	DINT	RW	No	-1073741823 to 1073741823 (default: 0) [Pos. unit]	Yes
	2	Max position limit	DINT	RW	No	-1073741823 to 1073741823 (default: 0) [Pos. unit]	Yes
6084h	0	Profile Deceleration	UDINT	RW	Yes	0 to 4294967295 (default: 1000) [Acc. unit]	Yes
6085h	0	Quick Stop Deceleration	UDINT	RW	Yes	0 to 4294967295 (default: 1000) [Acc. unit]	Yes

(b) Object Setting Procedure

The recommended object setting procedure to use mode 2 is given in the following table.

Step	Description
1	Set Interpolation Submode Select (60C0h).
2	Set Interpolation Profile Select (2732h).
3	Set Interpolation Data Configuration for 1st Profile (2730h) and Interpolation Data Configuration for 2nd Profile (2731h).
4	Set Interpolation Data Record for 1st Profile (27C0h) and Interpolation Data Record for 2nd Profile (27C1h).
5	Set Mode of Operation (6060h).
6	Set Enable Interpolation (6060h bit 4).

14.3.3 Cyclic Synchronous Position Mode

The Cyclic Synchronous Position Mode is used for the interpolated positioning in the same way as the Interpolated Position Mode. In this mode, speed and torque compensations can be specified by the master to enable speed and torque feedforward.

The Interpolation Time Period defines the interval at which the Target Position is updated. Interpolation is performed in the SERVOPACK according to this setting.

The target position is interpreted as an absolute value.

The following figure shows the block diagram for the Cyclic Synchronous Position Mode.

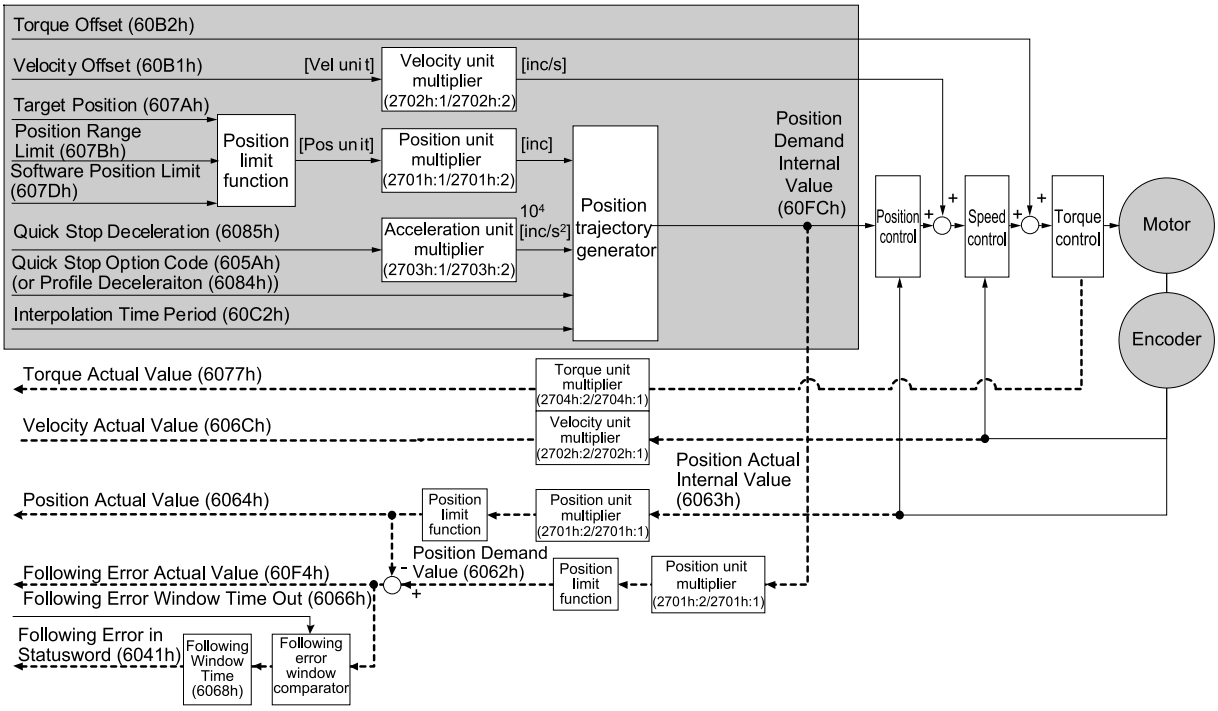

(1) Related Objects

Index	Subindex	Name	Data Type	Access	PDO Mapping	Value	Saving to EEPROM
607Ah	0	Target Position	DINT	RW	Yes	-2147483648 to 2147483647 (default: 0) [Pos. unit]	No
607Bh	0	Number of entries	USINT	RO	No	2	No
	1	Min position range limit	DINT	RW	Yes	-2147483648 to 0 (default: 0) [Pos. unit]	Yes
	2	Max position range limit	DINT	RW	Yes	0 to 2147483647 (default: 0) [Pos. unit]	Yes
607Dh	0	Number of entries	USINT	RO	No	2	No
	1	Min position limit	DINT	RW	No	-1073741823 to 1073741823 (default: 0) [Pos. unit]	Yes
	2	Max position limit	DINT	RW	No	-1073741823 to 1073741823 (default: 0) [Pos. unit]	Yes
6084h	0	Profile Deceleration	UDINT	RW	Yes	0 to 4294967295 (default: 1000) [Acc. unit]	Yes
6085h	0	Quick Stop Deceleration	UDINT	RW	Yes	0 to 4294967295 (default: 1000) [Acc. unit]	Yes
60B1h	0	Velocity Offset	DINT	RW	Yes	-2147483648 to 2147483647 (default: 0) [Vel. unit]	No
60B2h	0	Torque Offset	INT	RW	Yes	-32768 to 32767 (default: 0) [Trq. unit]	No
60C2h	0	Number of entries	USINT	RO	No	2	No
	1	Interpolation time period value	USINT	RW	No	1 to 250 (default: 125)	No
	2	Interpolation time index	SINT	RW	No	-6 to -3 (default: -6)	No

14.4 Homing

The following figure shows the relationship between the input objects and the output objects in the Homing Mode.

You can specify the speeds, acceleration rate, and homing method.

You can also use Home Offset to offset zero in the user coordinate system from the home position.

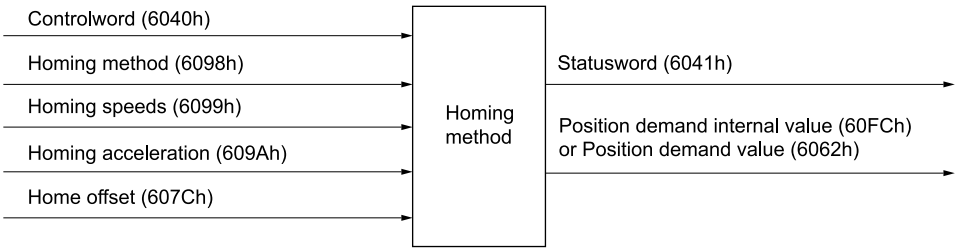

14.4.1 Related Objects

Index	Subindex	Name	Data Type	Access	PDO Mapping	Value	Saving to EEPROM
6040h	0	Controlword	UINT	RW	Yes	0 to 0xFFFF (default: 0)	No
6041h	0	Statusword	UINT	RO	Yes	–	No
607Ch	–	Home Offset	DINT	RW	No	-536870912 to 536870911 (default: 0) [Pos. unit]	Yes
6098h	0	Homing Method	SINT	RW	Yes	0 to 37 (default: 37)	No
6099h	0	Number of entries	USINT	RO	No	2	No
	1	Speed during search for switch	UDINT	RW	Yes	0 to 4294967295 (default: 500000) [Vel. unit]	Yes
	2	Speed during search for zero	UDINT	RW	Yes	0 to 4294967295 (default: 100000) [Vel. unit]	Yes
609Ah	0	Homing Acceleration	UDINT	RW	Yes	0 to 4294967295 (default: 1000) [Acc. unit]	Yes

14.4.2 Homing Method (6098h)

Value	Definition	Description
0	–	No homing
1	Homing with the negative limit switch and index pulse	With this method, homing starts in the reverse direction if the negative limit switch is inactive. The home position is the first index pulse that is detected after the negative limit switch becomes inactive. 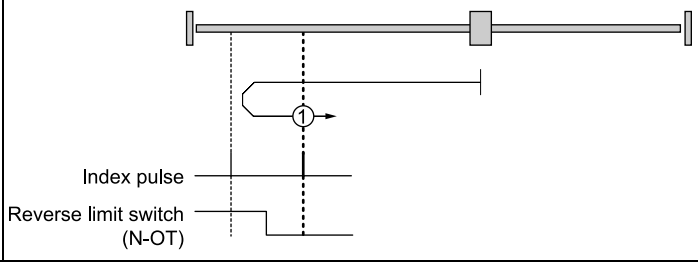

Continued on next page.

Continued from previous page.

Value	Definition	Description
2	Homing with the positive limit switch and index pulse	With this method, homing starts in the forward direction if the positive limit switch is inactive. The home position is the first index pulse that is detected after the positive limit switch becomes inactive. 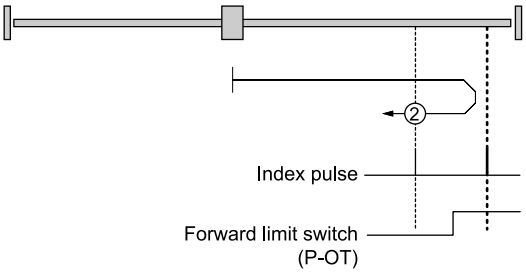
7 to 10	Homing with the home switch input (/Home) signal and index pulse and starting in the forward direction	With methods 7 to 10, homing starts in the forward direction. However, if the /Home signal is already active when homing is started, the initial homing direction depends on the required edge. The home position will be the index pulse on either the rising or falling edge side of the /Home signal. If the initial movement direction is away from the /Home signal, the motor will reverse direction when the limit switch in the movement direction is input. 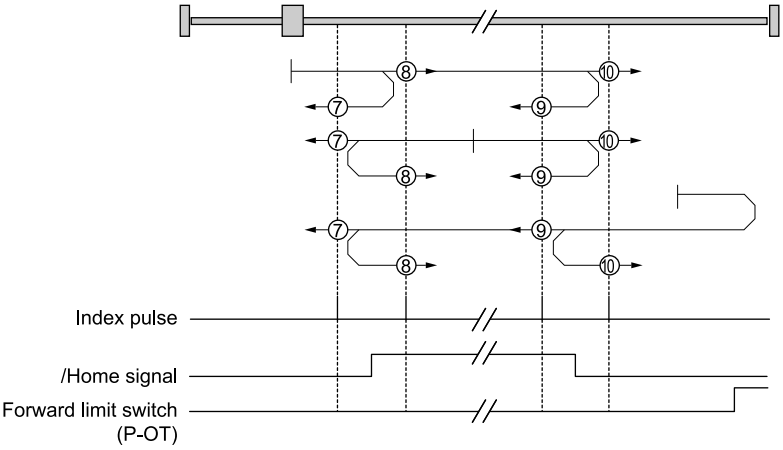
11 to 14	Homing with the home switch input (/Home) signal and index pulse and starting in the reverse direction	These methods are similar to methods 7 to 10 except that homing starts in the reverse direction. 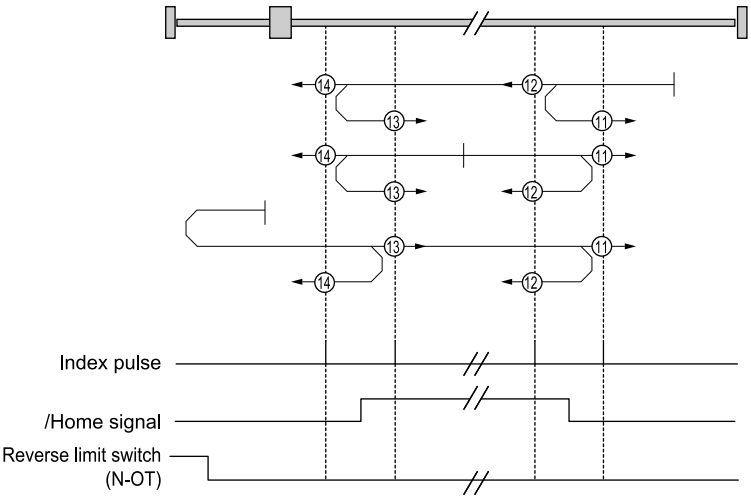

Continued on next page.

Continued from previous page.

Value	Definition	Description
24	Homing with the home switch input (/Home) signal and starting in the forward direction	This method is same as method 8 except that the home position does not depend on the index pulse. Here, it depends only on changes in the relevant /Home signal or limit switch. 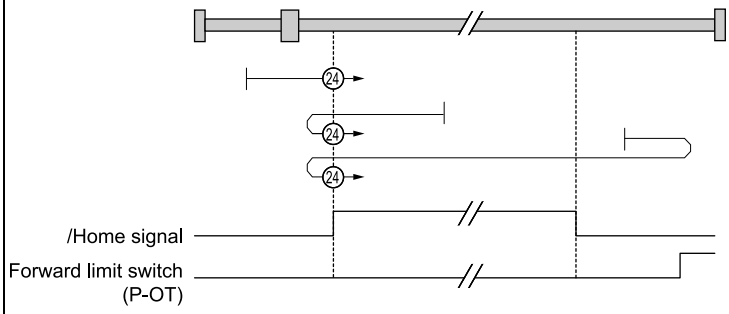
28	Homing with the home switch input (/Home) signal and starting in the reverse direction	This method is same as method 12 except that the home position does not depend on the index pulse. Here, it depends only on changes in the relevant /Home signal or limit switch. 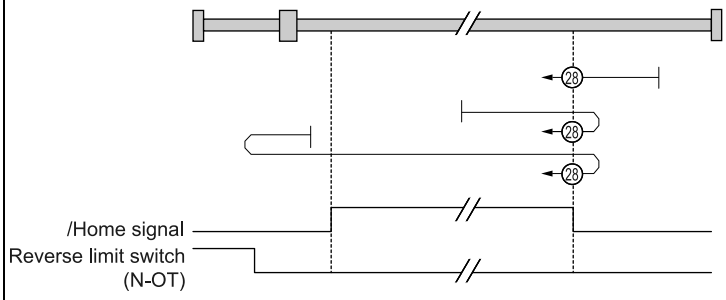
33, 34	Homing with the index pulse	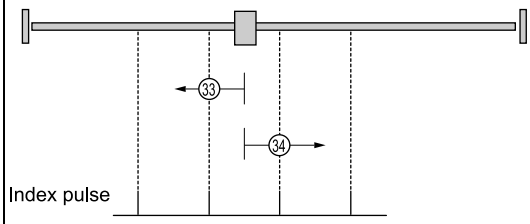
35, 37	Homing with the current position	With this method, the current position is defined as the home position. You can execute this method even if the servo drive is not in the Operation Enabled state. (default setting) If you perform homing with this method when an absolute encoder is connected, the offset value is saved automatically in Absolute Encoder Origin Offset (27E4h) and non-volatile memory. To perform homing with this method when an absolute encoder is connected, we recommend you set Home Offset (607Ch) to 0.

Note:

The index pulse is the encoder's zero signal (phase C).

14.5 Velocity Control Modes

14.5.1 Profile Velocity Mode

In the Profile Velocity Mode, the speed is output according to the profile acceleration and profile deceleration until it reaches the target velocity.

The following figure shows the block diagram for the Profile Velocity Mode.

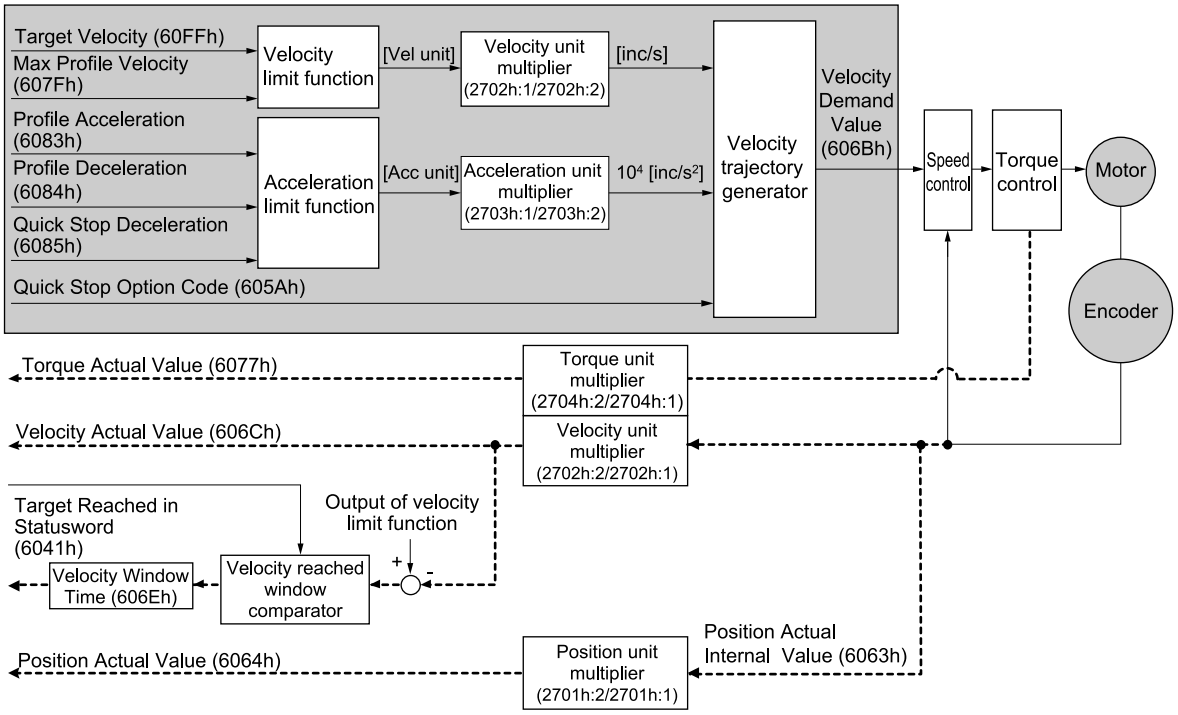

(1) Related Objects

Index	Subindex	Name	Data Type	Access	PDO Mapping	Value	Saving to EEPROM
60FFh	0	Target Velocity	DINT	RW	Yes	-2147483648 to 2147483647 (default: 0) [Vel. unit]	No
607Fh	0	Max Profile Velocity	UDINT	RW	Yes	0 to 4294967295 (default: 2147483647) [Vel. unit]	Yes
6083h	0	Profile Acceleration	UDINT	RW	Yes	0 to 4294967295 (default: 1000) [Acc. unit]	Yes
6084h	0	Profile Deceleration	UDINT	RW	Yes	0 to 4294967295 (default: 1000) [Acc. unit]	Yes
6085h	0	Quick Stop Deceleration	UDINT	RW	Yes	0 to 4294967295 (default: 1000) [Acc. unit]	Yes
606Bh	0	Velocity Demand Value	DINT	RO	Yes	– [Vel. unit]	No
606Ch	0	Velocity Actual Value	DINT	RO	Yes	– [Vel. unit]	No
606Dh	0	Velocity Window	UINT	RW	No	0 to 65535 (default: 20000) [Vel. unit]	Yes
606Eh	0	Velocity Window Time	UINT	RW	No	0 to 65535 (default: 0) [ms]	Yes

14.5.2 Cyclic Synchronous Velocity Mode

In the Cyclic Synchronous Velocity Mode, the master provides the target speed to the servo drive, which performs speed control. In this mode, a torque compensation can be specified by the master to enable torque feedforward.

The following figure shows the block diagram for the Cyclic Synchronous Velocity Mode.

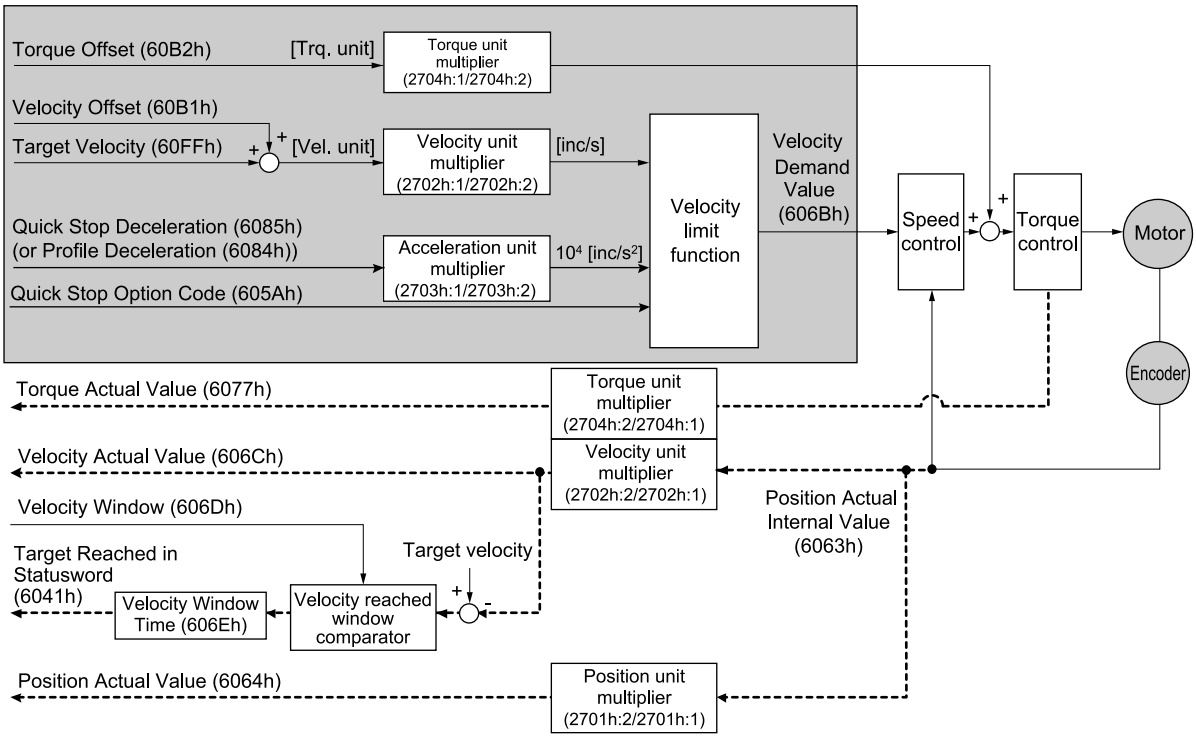

(1) Related Objects

Index	Subindex	Name	Data Type	Access	PDO Mapping	Value	Saving to EEPROM
60FFh	0	Target Velocity	DINT	RW	Yes	-2147483648 to 2147483647 (default: 0) [Vel. unit]	No
60B1h	0	Velocity Offset	DINT	RW	Yes	-2147483648 to 2147483647 (default: 0) [Vel. unit]	No
60B2h	0	Torque Offset	INT	RW	Yes	-32768 to 32767 (default: 0) [Trq. unit]	No
6084h	0	Profile Deceleration	UDINT	RW	Yes	0 to 4294967295 (default: 1000) [Acc. unit]	Yes
6085h	0	Quick Stop Deceleration	UDINT	RW	Yes	0 to 4294967295 (default: 1000) [Acc. unit]	Yes
606Bh	0	Velocity Demand Value	DINT	RO	Yes	– [Vel. unit]	No
606Ch	0	Velocity Actual Value	DINT	RO	Yes	– [Vel. unit]	No
606Dh	0	Velocity Window	UINT	RW	No	0 to 65535 (default: 20000) [Vel. unit]	Yes
606Eh	0	Velocity Window Time	UINT	RW	No	0 to 65535 (default: 0) [ms]	Yes

14.6 Torque Control Modes

14.6.1 Profile Torque Mode

In the Profile Torque Mode, the torque is output up to the Target Torque according to the Torque Slope setting. The following figure shows the block diagram for the Profile Torque Mode.

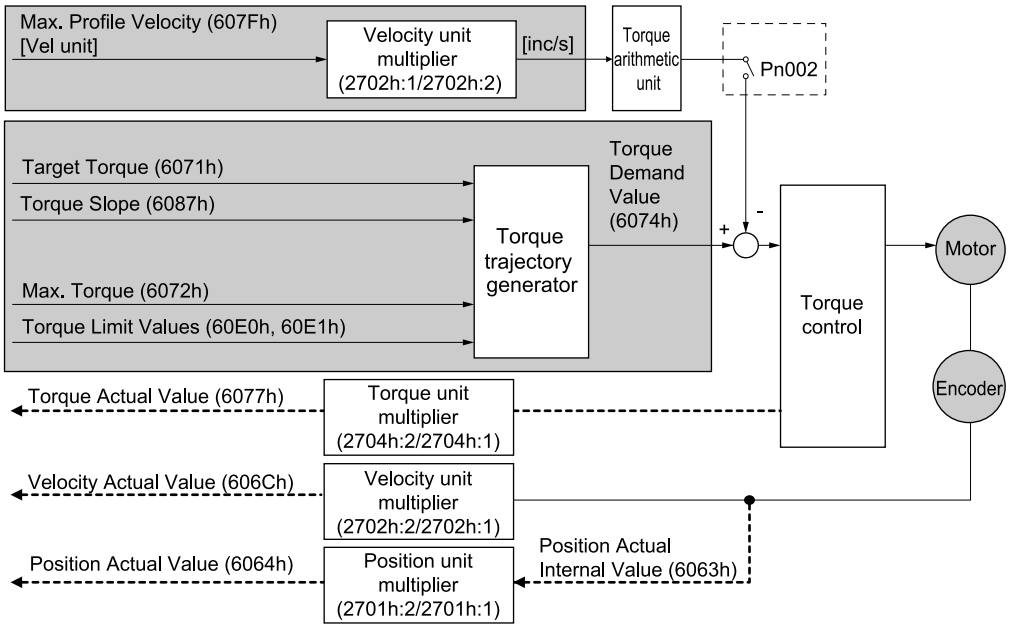

(1) Related Objects

Index	Subindex	Name	Data Type	Access	PDO Mapping	Value	Saving to EEPROM
6071h	0	Target Torque	INT	RW	Yes	-32768 to 32767 (default: 0) [Trq. unit]	No
6087h	0	Torque Slope	UDINT	RW	Yes	0 to 4294967295 (default: 1000) [Trq. unit/s]	Yes
6074h	0	Torque Demand Value	INT	RO	Yes	– [Trq. unit]	No
6077h	0	Torque Actual Value	INT	RO	Yes	– [Trq. unit]	No
6072h	0	Max Torque	UINT	RW	Yes	0 to 65535 (default: Motor max torque) [Trq. unit]	No
607Fh	0	Max Profile Velocity	UDINT	RW	Yes	0 to 4294967295 (default: 2147483647) [Vel. unit]	Yes
60E0h	0	Positive Torque Limit Value	UINT	RW	Yes	0 to 65535 (default: 8000) [Trq. unit]	Yes
60E1h	0	Negative Torque Limit Value	UINT	RW	Yes	0 to 65535 (default: 8000) [Trq. unit]	Yes

Note:

Refer to the following section for details on the unit of "Value".

☞ *15.14 Torque Limit Function on page 684*

14.6.2 Cyclic Sync Torque Mode

In the Cyclic Sync Torque Mode, the master provides the target torque to the SERVOPACK , which performs torque control.

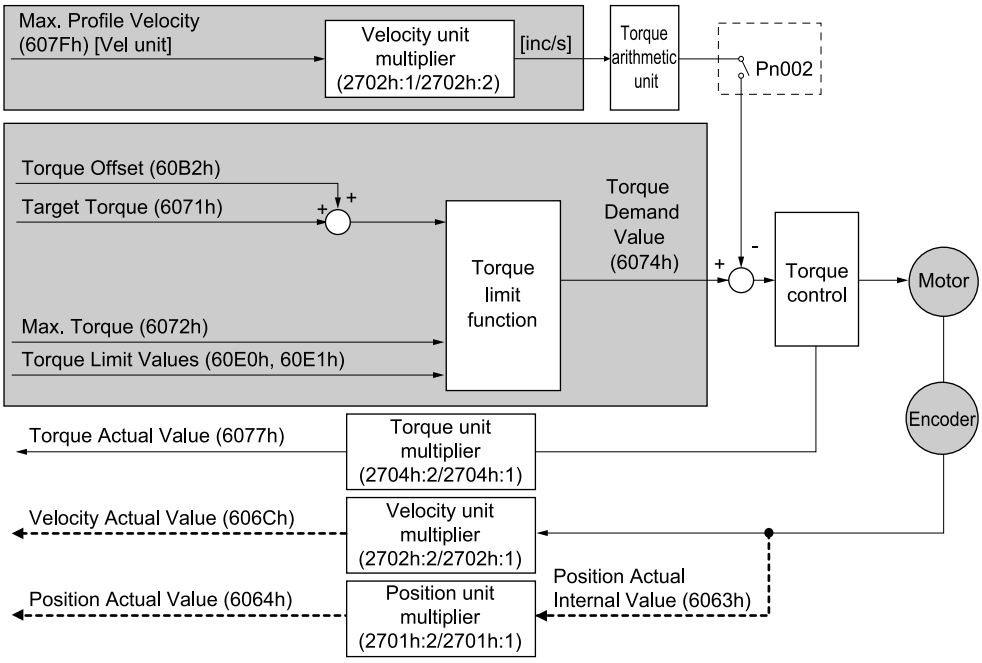

(1) Related Objects

Index	Subindex	Name	Data Type	Access	PDO Mapping	Value	Saving to EEPROM
6071h	0	Target Torque	INT	RW	Yes	-32768 to 32767 (default: 0) [Trq. unit]	No
6074h	0	Torque Demand Value	INT	RO	Yes	– [Trq. unit]	No
6077h	0	Torque Actual Value	INT	RO	Yes	– [Trq. unit]	No
60B2h	0	Torque Offset	INT	RW	Yes	-32768 to 32767 (default: 0) [Trq. unit]	No
6072h	0	Max Torque	UINT	RW	Yes	0 to 65535 (default: Motor max torque) [Trq. unit]	No
607Fh	0	Max Profile Velocity	UDINT	RW	Yes	0 to 4294967295 (default: 2147483647) [Vel. unit]	Yes
60E0h	0	Positive Torque Limit Value	UINT	RW	Yes	0 to 65535 (default: 8000) [Trq. unit]	Yes
60E1h	0	Negative Torque Limit Value	UINT	RW	Yes	0 to 65535 (default: 8000) [Trq. unit]	Yes

Note:

Refer to the following section for details on the unit of "Value".

☞ *15.14 Torque Limit Function on page 684*

14.7 Torque Limits

The following figure shows the block diagram for the torque limits. The torque is limited by the lowest limit value.

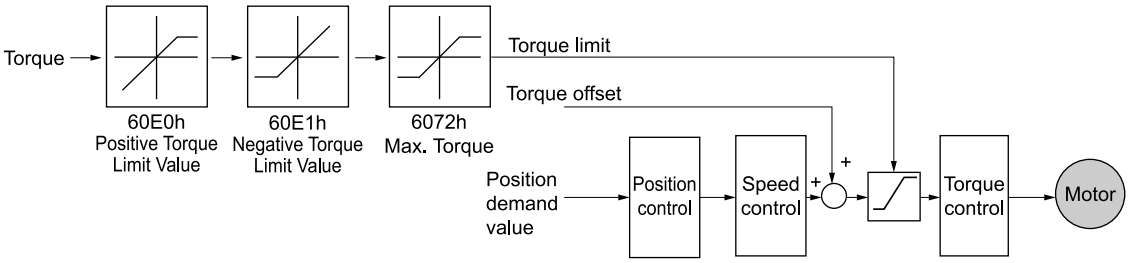

14.7.1 Related Objects

Index	Subindex	Name	Data Type	Access	PDO Mapping	Value	Saving to EEPROM
6072h	0	Max Torque	UINT	RW	Yes	0 to 65535 (default: Motor max torque) [Trq. unit]	No
60E0h	0	Positive Torque Limit Value	UINT	RW	Yes	0 to 65535 (default: 8000) [Trq. unit]	Yes
60E1h	0	Negative Torque Limit Value	UINT	RW	Yes	0 to 65535 (default: 8000) [Trq. unit]	Yes

Note:

Refer to the following section for details on the unit of "Value".

☞ *15.14 Torque Limit Function on page 684*

14.8 Digital I/O Signals

The Digital Inputs and Digital Outputs are used to control the I/O signals of the CN1 connector on the SERVOPACK.

Index	Subindex	Name	Data Type	Access	PDO Mapping	Value	Saving to EEPROM
60FDh	0	Digital Inputs	UDINT	RO	Yes	–	No
60FEh	0	Number of entries	USINT	RO	No	2	No
	1	Physical outputs	UDINT	RW	Yes	0 to 0xFFFFFFFF (default: 0)	Yes
	2	Bit mask	UDINT	RW	No	0 to 0xFFFFFFFF (default: 0x000C0000)	Yes

14.9 Touch Probe

You can latch the feedback position with the following trigger events.

- Trigger with probe 1 input (Probe 1 Latch Input (/Probe1) signal)
- Trigger with probe 2 input (Probe 2 Latch Input (/Probe2) signal)
- Trigger with encoder zero signal (phase C)

The following two touch probe latches can be used at the same time.

- Touch Probe 1 Latch
  - Latch control object: 60B8h (bits 0 to 7)
  - Latch status object: 60B9h (bits 0 to 7)
  - Save latched position: 60BAh (Touch Probe 1 Positive Edge) or 60BBh (Touch Probe 1 Negative Edge)
  - Trigger signal: Encoder zero signal or /Probe1 signal
- Touch Probe 2 Latch
  - Latch control object: 60B8h (bits 8 to 15)
  - Latch status object: 60B9h (bits 8 to 15)
  - Save latched position: 60BCh (Touch Probe 2 Positive Edge) or 60BDh (Touch Probe 2 Negative Edge)
  - Trigger signal: /Probe2 signal

You can change the connector pin assignments and the /Probe1 and /Probe2 signal logic in the Probe 1 Latch Input Signal parameter (Pn511 = □□X□) and the Probe 2 Latch Input Signal parameter (Pn511 = □X□□).

Note:

Touch probe 1 cannot be used during homing. If touch probe 1 was already enabled during homing, touch probe 1 operation will be disabled.

14.9.1 Related Objects

Index	Subindex	Name	Data Type	Access	PDO Mapping	Value	Saving to EEPROM
60B8h	0	Touch probe function	UINT	RW	Yes	0 to 0xFFFF (default: 0)	No
60B9h	0	Touch Probe Status	UINT	RO	Yes	–	No
60BAh	0	Touch probe 1 positive edge	DINT	RO	Yes	– [Pos. unit]	No
60BBh	0	Touch probe 1 negative edge	DINT	RO	Yes	– [Pos. unit]	No
60BCh	0	Touch probe 2 positive edge	DINT	RO	Yes	– [Pos. unit]	No
60BDh	0	Touch probe 2 negative edge	DINT	RO	Yes	– [Pos. unit]	No

14.9.2 Example of Execution Procedure for a Touch Probe

- Single Trigger Mode (60B8h bit 1 = 0 or bit 9 = 0)

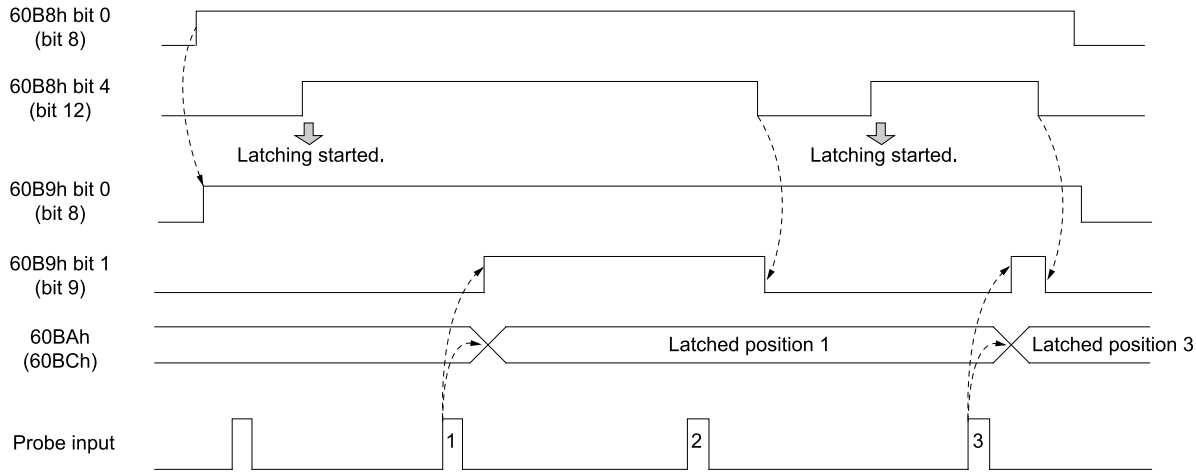

- Continuous Trigger Mode (60B8h bit 1 = 1 or bit 9 = 1)

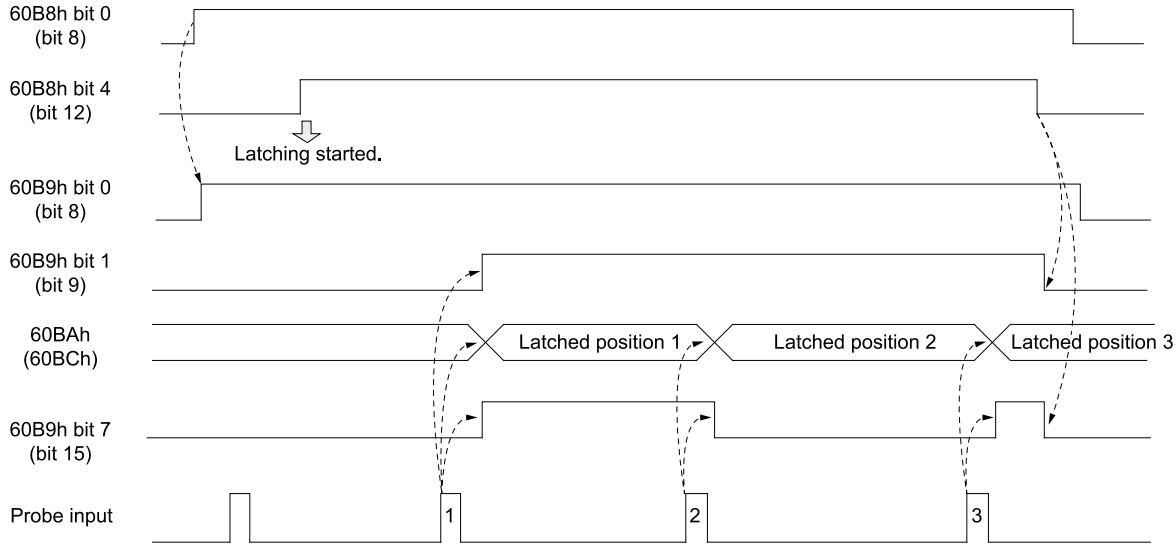

14.10 Fully-Closed Loop Control

The following figure shows the block diagram for the fully-closed loop control.

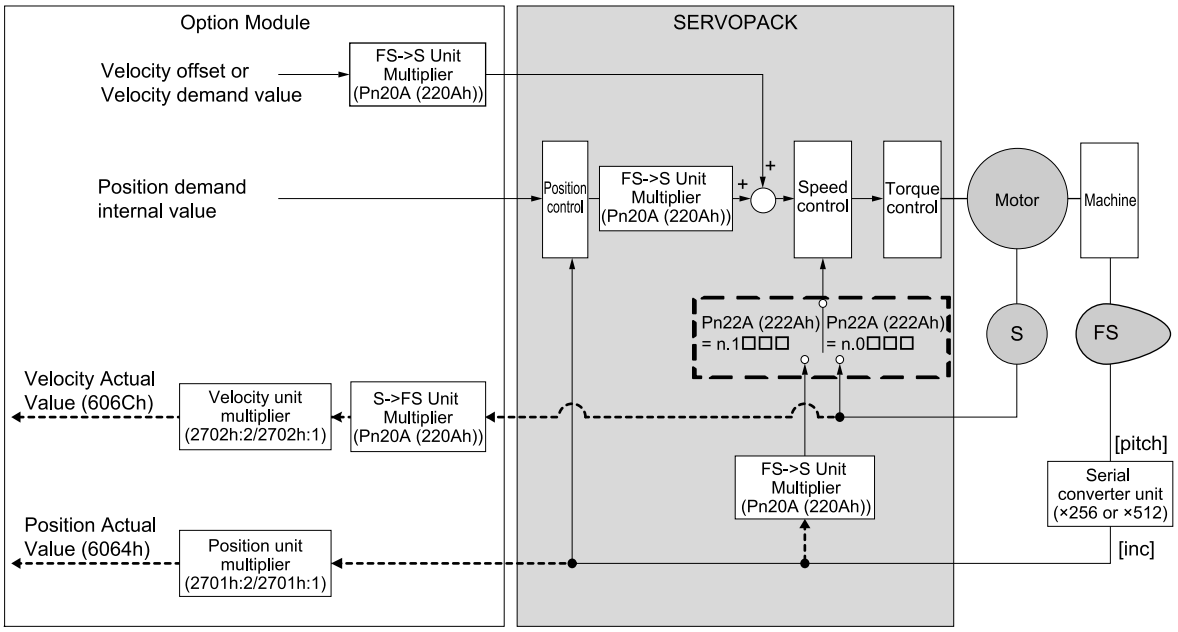

The basic setting procedure for the related parameters is given in the following table.

Step	Description	Parameter Setting
1	Set the speed feedback method to use during fully-closed loop control.	Fully-closed Control Selections (Pn22A (222Ah))
2	Set the motor rotation direction.	Rotation Direction Selection (Pn000 (2000h) = n.□□□X) External Encoder Usage (Pn002 (2002h) = n.X□□□)
3	Set the number of pitches (cycles) of the sine wave for the external encoder.	Number of External Encoder Scale Pitches (Pn20A (220Ah))
4	Set the position reference unit (electronic gear).	Position User Unit (2701h)
5	Set the alarm detection level for the external encoder.	Motor-Load Position Deviation Overflow Detection Level (Pn51B (251Bh)) Multiplier per Fully-closed Rotation (Pn52A (252Ah))

15

Object Dictionary

This chapter provides tables of the objects that are supported by an EtherCAT SERVOPACK.
Each object is described.

15.1 Object Dictionary List 625

15.2 General Objects 630

- 15.2.1 Device Type (1000h) 630
- 15.2.2 Error Register (1001h) 630
- 15.2.3 Manufacturer Device Name (1008h) 630
- 15.2.4 Manufacturer Software Version (100Ah) 630
- 15.2.5 Store Parameters (1010h) 631
- 15.2.6 Restore Default Parameters (1011h) 631
- 15.2.7 Identity Object (1018h) 632

15.3 PDO Mapping Objects 633

- 15.3.1 Receive PDO Mapping (1600h to 1603h) 634
- 15.3.2 Transmit PDO Mapping (1A00h to 1A03h) 638

15.4 Sync Manager Communication Objects 642

- 15.4.1 Sync Manager Communication Type (1C00h) 642
- 15.4.2 Sync Manager PDO Assignment (1C10h-1C13h) 642
- 15.4.3 Sync Manager Synchronization (1C32h, 1C33h) 643
- 15.4.4 Sync Error Settings (10F1h) 645

15.5 Manufacturer Specific Objects 647

- 15.5.1 SERVOPACK Parameters (2000h to 26FFh) 647
- 15.5.2 User Parameter Configuration (2700h) 647
- 15.5.3 Position User Unit (2701h) 647
- 15.5.4 Velocity User Unit (2702h) 648
- 15.5.5 Acceleration User Unit (2703h) 648
- 15.5.6 Torque User Unit (2704h) 648
- 15.5.7 SERVOPACK Adjusting Command (2710h) 649
- 15.5.8 Manufacturer Interpolation Data Configuration for 1st Profile (2730h) (Mode 2 Object) 652
- 15.5.9 Manufacturer Interpolation Data Configuration for 2nd Profile (2731h) (Mode 2 Object) 653

15.5.10 Interpolation Profile Select (2732h) (Mode 2 Object) 654
15.5.11 Interpolation Data Read/Write Pointer Position Monitor (2741h) (Mode 2 Object) 655
15.5.12 Sensing Data Monitor (2770h, 2771h, 2772h) 655
15.5.13 Σ-LINK II Data Monitor (2773h, 2774h) 657
15.5.14 Controlword_VenderS (2776h) 658
15.5.15 Output Position Setting (2778h) 659
15.5.16 Output Function Setting (2779h) 659
15.5.17 Output Time Setting (277Ah) 659
15.5.18 Output Distance Setting (277Bh) 659
15.5.19 Output Position Correction Setting (277Ch) 659
15.5.20 Interpolation Data Record for 1st Profile (27C0h) (Mode 2 Object) 660
15.5.21 Interpolation Data Record for 2nd Profile (27C1h) (Mode 2 Object) 660

15.6 Device Control 661
15.6.1 Error Code (603Fh) 661
15.6.2 Controlword (6040h) 661
15.6.3 Statusword (6041h) 663
15.6.4 Quick Stop Option Code (605Ah) 666
15.6.5 Shutdown Option Code (605Bh) 666
15.6.6 Disable Operation Option Code (605Ch) 667
15.6.7 Halt Option Code (605Dh) 667
15.6.8 Fault Reaction Option Code (605Eh) 667
15.6.9 Modes of Operation (6060h) 668
15.6.10 Modes of Operation Display (6061h) 668
15.6.11 Supported Drive Modes (6502h) 668

15.7 Profile Position Mode 670
15.7.1 Target Position (607Ah) 670
15.7.2 Software Position Limit (607Dh) 670
15.7.3 Max Profile Velocity (607Fh) 670
15.7.4 Profile Velocity (6081h) 671
15.7.5 Profile Acceleration (6083h) 671
15.7.6 Profile Deceleration (6084h) 671
15.7.7 Quick Stop Deceleration (6085h) 671

15.8 Homing Mode 672
15.8.1 Home Offset (607Ch) 672
15.8.2 Homing Method (6098h) 672
15.8.3 Homing Speeds (6099h) 673
15.8.4 Homing Acceleration (609Ah) 673

15.9 Position Control Function 674
15.9.1 Position Demand Value (6062h) 674
15.9.2 Position Actual Internal Value (6063h) 674
15.9.3 Position Actual Value (6064h) 674
15.9.4 Position Demand Internal Value (60FCh) 674
15.9.5 Following Error Window (6065h) 674
15.9.6 Following Error Time Out (6066h) 675
15.9.7 Following Error Actual Value (60F4h) 675
15.9.8 Position Window (6067h) 675
15.9.9 Position Window Time (6068h) 675
15.9.10 Position Offset (60B0h) 675
15.9.11 Additional Position Actual Value (60E4h) 676
15.9.12 Position Range Limit (607Bh) 676
15.9.13 Position Option Code (60F2h) 676

15.10 Interpolated Position Mode 677
15.10.1 Interpolation Submode Select (60C0h) (Object Shared by Mode 1 and Mode 2) 677
15.10.2 Interpolation Data Record (60C1h) (Object Shared by Mode 1 and Mode 2) 677
15.10.3 Interpolation Time Period (60C2h) (Object Shared by Mode 1 and Mode 2) 677

15.11 Cyclic Synchronous Position Mode 679
15.11.1 Velocity Offset (60B1h) 679
15.11.2 Torque Offset (60B2h) 679

15.12 Profile Velocity/Cyclic Synchronous Velocity Mode 680
15.12.1 Velocity Demand Value (606Bh) 680
15.12.2 Velocity Actual Value (606Ch) 680
15.12.3 Velocity Window (606Dh) 680
15.12.4 Velocity Window Time (606Eh) 680
15.12.5 End Velocity (6082h) 680
15.12.6 Target Velocity (60FFh) 681

15.13 Profile Torque/Cyclic Synchronous Torque Mode 682
15.13.1 Target Torque (6071h) 682
15.13.2 Torque Demand Value (6074h) 682
15.13.3 Torque Slope (6087h) 682
15.13.4 Motor Rated Torque (6076h) 682
15.13.5 Torque Actual Value (6077h) 682
15.13.6 Current Actual Value (6078h) 683

15.14 Torque Limit Function 684

15.14.1 Max. Torque (6072h) 684
15.14.2 Positive Torque Limit Value (60E0h) 684
15.14.3 Negative Torque Limit Value (60E1h) 684

15.15 Touch Probe Function 685
15.15.1 Touch Probe Function (60B8h) 685
15.15.2 Touch Probe Status (60B9h) 686
15.15.3 Touch Probe 1 Positive Edge (60BAh) 686
15.15.4 Touch Probe 1 Negative Edge (60BBh) 687
15.15.5 Touch Probe 2 Positive Edge (60BCh) 687
15.15.6 Touch Probe 2 Negative Edge (60BDh) 687

15.16 Digital Inputs/Outputs 688
15.16.1 Digital Inputs (60FDh) 688
15.16.2 Digital Outputs (60FEh) 688

15.17 Motor Catalogue Number (6403h) 690

15.18 Manufacturer Serial Number (F9F0h) 691

15.1 Object Dictionary List

The following table lists the dictionary objects.

Information

If you are connecting the advanced safety module to the SERVOPACK, there is an object dictionary for the advanced safety module in addition to the following table. Refer to the following manual for details.

Σ-X-Series AC Servo Drive Advanced Safety Module with Safety over EtherCAT (FSoE) Communications References Product Manual (Manual No.: SIEP C710812 25)

Functional Classification	Object Name	Reference
General Objects	Device Type	☞ *15.2.1 Device Type (1000h) on page 630*
	Error Register	☞ *15.2.2 Error Register (1001h) on page 630*
	Manufacturer Device Name	☞ *15.2.3 Manufacturer Device Name (1008h) on page 630*
	Manufacturer Software Version	☞ *15.2.4 Manufacturer Software Version (100Ah) on page 630*
	Store Parameters	☞ *15.2.5 Store Parameters (1010h) on page 631*
	Restore Default Parameters	☞ *15.2.6 Restore Default Parameters (1011h) on page 631*
	Identity Object	☞ *15.2.7 Identity Object (1018h) on page 632*
PDO Mapping Objects	Receive PDO Mapping	☞ *15.3.1 Receive PDO Mapping (1600h to 1603h) on page 634*
	Transmit PDO Mapping	☞ *15.3.2 Transmit PDO Mapping (1A00h to 1A03h) on page 638*
Sync Manager Communication Objects	Sync Manager Communication Type	☞ *15.4.1 Sync Manager Communication Type (1C00h) on page 642*
	Sync Manager PDO Assignment	☞ *15.4.2 Sync Manager PDO Assignment (1C10h-1C13h) on page 642*
	Sync Manager Synchronization	☞ *15.4.3 Sync Manager Synchronization (1C32h, 1C33h) on page 643*
	Sync Error Setting	☞ *15.4.4 Sync Error Settings (10F1h) on page 645*

Continued on next page.

Continued from previous page.

Functional Classification	Object Name	Reference
Manufacturer Specific Objects	SERVOPACK Parameters	☞ *15.5.1 SERVOPACK Parameters (2000h to 26FFh) on page 647*
	User Parameter Configuration	☞ *15.5.2 User Parameter Configuration (2700h) on page 647*
	Position User Unit	☞ *15.5.3 Position User Unit (2701h) on page 647*
	Velocity User Unit	☞ *15.5.4 Velocity User Unit (2702h) on page 648*
	Acceleration User Unit	☞ *15.5.5 Acceleration User Unit (2703h) on page 648*
	Torque User Unit	☞ *15.5.6 Torque User Unit (2704h) on page 648*
	SERVOPACK Adjusting Command Object	☞ *15.5.7 SERVOPACK Adjusting Command (2710h) on page 649*
	Sensing Data Monitor	☞ *15.5.12 Sensing Data Monitor (2770h, 2771h, 2772h) on page 655*
	Σ-LINK II Data Monitor	☞ *15.5.13 Σ-LINK II Data Monitor (2773h, 2774h) on page 657*
	Output Position Setting	☞ *15.5.15 Output Position Setting (2778h) on page 659*
	Output Function Setting	☞ *15.5.16 Output Function Setting (2779h) on page 659*
	Output Time Setting	☞ *15.5.17 Output Time Setting (277Ah) on page 659*
	Output Distance Setting	☞ *15.5.18 Output Distance Setting (277Bh) on page 659*
	Output Position Correction Setting	☞ *15.5.19 Output Position Correction Setting (277Ch) on page 659*
Device Control	Error Code	☞ *15.6.1 Error Code (603Fh) on page 661*
	Controlword	☞ *15.6.2 Controlword (6040h) on page 661*
	Controlword_VenderS	☞ *15.5.14 Controlword_VenderS (2776h) on page 658*
	Statusword	☞ *15.6.3 Statusword (6041h) on page 663*
	Quick Stop Option Code	☞ *15.6.4 Quick Stop Option Code (605Ah) on page 666*
	Shutdown Option Code	☞ *15.6.5 Shutdown Option Code (605Bh) on page 666*
	Disable Operation Option Code	☞ *15.6.6 Disable Operation Option Code (605Ch) on page 667*
	Halt Option Code	☞ *15.6.7 Halt Option Code (605Dh) on page 667*
	Fault Reaction Option Code	☞ *15.6.8 Fault Reaction Option Code (605Eh) on page 667*
	Modes of Operation	☞ *15.6.9 Modes of Operation (6060h) on page 668*
	Modes of Operation Display	☞ *15.6.10 Modes of Operation Display (6061h) on page 668*
	Supported Drive Modes	☞ *15.6.11 Supported Drive Modes (6502h) on page 668*

Continued on next page.

Continued from previous page.

Functional Classification	Object Name	Reference
Profile Position Mode	Target Position	☞ 15.7.1 Target Position (607Ah) on page 670
	Software Position Limit	☞ 15.7.2 Software Position Limit (607Dh) on page 670
	Max. Profile Velocity	☞ 15.7.3 Max Profile Velocity (607Fh) on page 670
	Profile Velocity	☞ 15.7.4 Profile Velocity (6081h) on page 671
	Profile Acceleration	☞ 15.7.5 Profile Acceleration (6083h) on page 671
	Profile Deceleration	☞ 15.7.6 Profile Deceleration (6084h) on page 671
	Quick Stop Deceleration	☞ 15.7.7 Quick Stop Deceleration (6085h) on page 671
Homing Mode	Home Offset	☞ 15.8.1 Home Offset (607Ch) on page 672
	Homing Method	☞ 15.8.2 Homing Method (6098h) on page 672
	Homing Speeds	☞ 15.8.3 Homing Speeds (6099h) on page 673
	Homing Acceleration	☞ 15.8.4 Homing Acceleration (609Ah) on page 673
Position Control Function	Position Demand Value	☞ 15.9.1 Position Demand Value (6062h) on page 674
	Position Actual Internal Value	☞ 15.9.2 Position Actual Internal Value (6063h) on page 674
	Position Actual Value	☞ 15.9.3 Position Actual Value (6064h) on page 674
	Position Demand Internal Value	☞ 15.9.4 Position Demand Internal Value (60FCh) on page 674
	Following Error Window	☞ 15.9.5 Following Error Window (6065h) on page 674
	Following Error Time Out	☞ 15.9.6 Following Error Time Out (6066h) on page 675
	Following Error Actual Value	☞ 15.9.7 Following Error Actual Value (60F4h) on page 675
	Position Window	☞ 15.9.8 Position Window (6067h) on page 675
	Position Window Time	☞ 15.9.9 Position Window Time (6068h) on page 675
	Position Offset	☞ 15.9.10 Position Offset (60B0h) on page 675
	Additional Position Actual Value	☞ 15.9.11 Additional Position Actual Value (60E4h) on page 676
	Position Range Limit	☞ 15.9.12 Position Range Limit (607Bh) on page 676
	Position Option Code	☞ 15.9.13 Position Option Code (60F2h) on page 676

Continued on next page.

Continued from previous page.

Functional Classification	Object Name	Reference
Interpolated Position Mode	Interpolation Sub Mode Select	☞ *15.10.1 Interpolation Submode Select (60C0h) (Object Shared by Mode 1 and Mode 2) on page 677*
	Interpolation Data Record	☞ *15.10.2 Interpolation Data Record (60C1h) (Object Shared by Mode 1 and Mode 2) on page 677*
	Interpolation Time Period	☞ *15.10.3 Interpolation Time Period (60C2h) (Object Shared by Mode 1 and Mode 2) on page 677*
	Manufacturer Interpolation Data Configuration for 1st Profile	☞ *15.5.8 Manufacturer Interpolation Data Configuration for 1st Profile (2730h) (Mode 2 Object) on page 652*
	Manufacturer Interpolation Data Configuration for 2nd Profile	☞ *15.5.9 Manufacturer Interpolation Data Configuration for 2nd Profile (2731h) (Mode 2 Object) on page 653*
	Interpolation Profile Select	☞ *15.5.10 Interpolation Profile Select (2732h) (Mode 2 Object) on page 654*
	Interpolation Data Record for 1st Profile	☞ *15.5.20 Interpolation Data Record for 1st Profile (27C0h) (Mode 2 Object) on page 660*
	Interpolation Data Record for 2nd Profile	☞ *15.5.21 Interpolation Data Record for 2nd Profile (27C1h) (Mode 2 Object) on page 660*
	Interpolation Data Read/Write Pointer Position	☞ *15.5.11 Interpolation Data Read/Write Pointer Position Monitor (2741h) (Mode 2 Object) on page 655*
Cyclic Synchronous Position Mode	Velocity Offset	☞ *15.11.1 Velocity Offset (60B1h) on page 679*
	Torque Offset	☞ *15.11.2 Torque Offset (60B2h) on page 679*
Profile Velocity/Cyclic Synchronous Velocity Mode	Velocity Demand Value	☞ *15.12.1 Velocity Demand Value (606Bh) on page 680*
	Velocity Actual Value	☞ *15.12.2 Velocity Actual Value (606Ch) on page 680*
	Velocity Window	☞ *15.12.3 Velocity Window (606Dh) on page 680*
	Velocity Window Time	☞ *15.12.4 Velocity Window Time (606Eh) on page 680*
	End Velocity	☞ *15.12.5 End Velocity (6082h) on page 680*
	Target Velocity	☞ *15.12.6 Target Velocity (60FFh) on page 681*
Profile Torque/Cyclic Synchronous Velocity Mode	Target Torque	☞ *15.13.1 Target Torque (6071h) on page 682*
	Torque Demand Value	☞ *15.13.2 Torque Demand Value (6074h) on page 682*
	Torque Slope	☞ *15.13.3 Torque Slope (6087h) on page 682*
	Motor Rated Torque	☞ *15.13.4 Motor Rated Torque (6076h) on page 682*
	Torque Actual Value	☞ *15.13.5 Torque Actual Value (6077h) on page 682*
	Current Actual Value	☞ *15.13.6 Current Actual Value (6078h) on page 683*

Continued on next page.

Continued from previous page.

Functional Classification	Object Name	Reference
Torque Limit Function	Max. Torque	☞ *15.14.1 Max. Torque (6072h) on page 684*
	Positive Torque Limit Value	☞ *15.14.2 Positive Torque Limit Value (60E0h) on page 684*
	Negative Torque Limit Value	☞ *15.14.3 Negative Torque Limit Value (60E1h) on page 684*
Touch Probe Function	Touch Probe Function	☞ *15.15.1 Touch Probe Function (60B8h) on page 685*
	Touch Probe Status	☞ *15.15.2 Touch Probe Status (60B9h) on page 686*
	Touch Probe 1 Positive Edge	☞ *15.15.3 Touch Probe 1 Positive Edge (60BAh) on page 686*
	Touch Probe 1 Negative Edge	☞ *15.15.4 Touch Probe 1 Negative Edge (60BBh) on page 687*
	Touch Probe 2 Positive Edge	☞ *15.15.5 Touch Probe 2 Positive Edge (60BCh) on page 687*
	Touch Probe 2 Negative Edge	☞ *15.15.6 Touch Probe 2 Negative Edge (60BDh) on page 687*
Digital Inputs/Outputs	Digital Inputs	☞ *15.16.1 Digital Inputs (60FDh) on page 688*
	Digital Outputs	☞ *15.16.2 Digital Outputs (60FEh) on page 688*
Motor Catalogue Number		☞ *15.17 Motor Catalogue Number (6403h) on page 690*
Manufacturer Serial Number		☞ *15.18 Manufacturer Serial Number (F9F0h) on page 691*

15.2 General Objects

15.2.1 Device Type (1000h)

This object contains the device type and functionality.

Index	Subindex	Name	Data Type	Access	PDO Mapping	Value	Saving to EEPROM
1000h	0	Device Type	UDINT	RO	No	0x00020192	No

(1) Data Description

Bit 31	16 15	0
Additional information	Device profile number	

Additional information: 0002 (Servo Drive)

Device profile number: 0192 (DS402)

15.2.2 Error Register (1001h)

This object contains the error status of the device. The value of this object is stored as part of an emergency message.

Index	Subindex	Name	Data Type	Access	PDO Mapping	Value	Saving to EEPROM
1001h	0	Error Register	USINT	RO	No	–	No

(1) Data Description

Bit	Data	Description
0	Generic error	0: No error, 1: Error
1 to 7	Reserved	0: Always 0

15.2.3 Manufacturer Device Name (1008h)

This object contains the SERVOPACK model name.

Index	Subindex	Name	Data Type	Access	PDO Mapping	Value	Saving to EEPROM
1008h	0	Manufacturer Device Name	STRING	RO	No	–	No

15.2.4 Manufacturer Software Version (100Ah)

This object contains the software version of the SERVOPACK.

Index	Subindex	Name	Data Type	Access	PDO Mapping	Value	Saving to EEPROM
100Ah	0	Manufacturer Software Version	STRING	RO	No	–	No

(1) Data Description

The following string is saved.

“xxxx.*”

xxxx.*: This object contains the software version of the SERVOPACK.

15.2.5 Store Parameters (1010h)

You can use this object to save the parameter settings in non-volatile memory.

Index	Subindex	Name	Data Type	Access	PDO Mapping	Value	Saving to EEPROM
1010h	0	Largest subindex supported	USINT	RO	No	4	No
	1	Save all parameters	UDINT	RW	No	0x00000000 to 0xFFFFFFFF (default: 0x00000001)	No
	2	Reserved	UDINT	RW	No	0x00000001	No
	3	Reserved	UDINT	RW	No	0x00000001	No
	4	Reserved	UDINT	RW	No	0x00000001	No

If you read the object entry data, a value will be returned that tells whether the SERVOPACK can save the parameters.

Bit	Value	Description
1	0	The SERVOPACK does not save the parameters autonomously.
0	0	The SERVOPACK does not save the parameters for a command.
	1	The SERVOPACK saves the parameters for a command.

To prevent saving parameters by mistake, they are saved only when a specific signature is written to the appropriate subindex. The signature is “save.”

Signature	MSB			LSB
ASCII	e	v	a	s
hex	65h	76h	61h	73h

If you write “save” to subindex 1, all parameters are saved.

Note:

- If an incorrect signature is written, the SERVOPACK refuses to save the parameters and returns an SDO abort code.
- If you read the object entry data while parameters are being saved, 0 will be returned.
- Subindex 1 can be written only in the Switch ON Disabled state (servo OFF).
- After storing parameters with subindex 1, you must turn the power OFF and ON again to move to the Operation Enabled state.

15.2.6 Restore Default Parameters (1011h)

You can use this object to restore the parameters to the default values.

Index	Subindex	Name	Data Type	Access	PDO Mapping	Value	Saving to EEPROM
1011h	0	Largest subindex supported	USINT	RO	No	4	No
	1	Restore all default parameters	UDINT	RW	No	0x00000000 to 0xFFFFFFFF (default: 0x00000001)	No
	2	Reserved	UDINT	RW	No	0x00000001	No
	3	Reserved	UDINT	RW	No	0x00000001	No
	4	Reserved	UDINT	RW	No	0x00000001	No

If you read the object entry data, a value will be returned that tells whether the SERVOPACK can initialize the parameters.

Bit	Value	Description
0	0	The SERVOPACK does not restore the parameters to the default values.
	1	The SERVOPACK restores the parameters to the default values.

To prevent restoring the parameters to the default values by mistake, the parameters are restored to the default values only when a specific signature is written to the appropriate subindex. The signature is “load.”

Signature	MSB			LSB
ASCII	d	a	o	l
hex	64h	61h	6Fh	6Ch

If you write “load” to subindex 1, all parameters are restored to the default values.

Note:

- If an incorrect signature is written, the SERVOPACK refuses to restore the default values and returns an SDO abort code.
- Subindex 1 can be written only in the Switch ON Disabled state (servo OFF).
- If you read this object while the default values are being restored, 0 will be returned.
- The default values are enabled after the SERVOPACK is reset or after the power to the SERVOPACK is turned OFF and ON again.

15.2.7 Identity Object (1018h)

This object contains general information on the device.

Index	Subindex	Name	Data Type	Access	PDO Mapping	Value	Saving to EEPROM
1018h	0	Number of entries	USINT	RO	No	4	No
	1	Vendor ID	UDINT	RO	No	0x00000539	No
	2	Product code	UDINT	RO	No	0x02200901	No
	3	Revision number	UDINT	RO	No	–	No
	4	Serial number	UDINT	RO	No	0x00000000	No

Note:

- The revision number is saved as follows:

Bit 31	Bit 16 Bit 15	Bit 0
Major Version	Minor Version	

The major version identifies the operating specifications of EtherCAT. If the EtherCAT functionality is expanded, the major version has to be increased. The minor version number identifies different versions with the same operating specifications.

- Serial Number is not used. (It is always 0.)

15.3 PDO Mapping Objects

The CANopen over EtherCAT protocol allows the user to map objects to process data objects (PDOs) in order to use the PDOs for realtime data transfer.

The PDO Mappings define which objects will be included in the PDOs.

A Mapping Entry (subindexes 1 to 16) is defined as shown below.

	Bit 31 … 16	15 … 8	7 … 0
Definition	Object index	Subindex	Length
Descrip-tion	The index of the mapped object (0 if there is a gap in the PDOs)	The subindex of the mapped object (0 if there is a gap in the PDOs)	The length of the mapped object in bits (If there is a gap in the PDOs, the bit length of the gap is given.)

Information The objects mapped to PDOs can be changed only when the EtherCAT Network Module is in the Pre-Operational state.
Set the mapping entries (subindexes 1 to 16) only after you write 0 to subindex 0.

15.3.1 Receive PDO Mapping (1600h to 1603h)

(1) 1st Receive PDO Mapping

Index	Subindex	Name	Data Type	Access	PDO Mapping	Value	Saving to EEPROM
1600h	0	Number of objects in this PDO	USINT	RW	No	0 to 16 (default: 8)	Yes
	1	Mapping entry 1	UDINT	RW	No	0 to 0xFFFFFFFF (default: 0x60400010)	Yes
	2	Mapping entry 2	UDINT	RW	No	0 to 0xFFFFFFFF (default: 0x607A0020)	Yes
	3	Mapping entry 3	UDINT	RW	No	0 to 0xFFFFFFFF (default: 0x60FF0020)	Yes
	4	Mapping entry 4	UDINT	RW	No	0 to 0xFFFFFFFF (default: 0x60710010)	Yes
	5	Mapping entry 5	UDINT	RW	No	0 to 0xFFFFFFFF (default: 0x60720010)	Yes
	6	Mapping entry 6	UDINT	RW	No	0 to 0xFFFFFFFF (default: 0x60600008)	Yes
	7	Mapping entry 7	UDINT	RW	No	0 to 0xFFFFFFFF (default: 0x00000008)	Yes
	8	Mapping entry 8	UDINT	RW	No	0 to 0xFFFFFFFF (default: 0x60B80010)	Yes
	9	Mapping entry 9	UDINT	RW	No	0 to 0xFFFFFFFF (default: 0)	Yes
	10	Mapping entry 10	UDINT	RW	No	0 to 0xFFFFFFFF (default: 0)	Yes
	11	Mapping entry 11	UDINT	RW	No	0 to 0xFFFFFFFF (default: 0)	Yes
	12	Mapping entry 12	UDINT	RW	No	0 to 0xFFFFFFFF (default: 0)	Yes
	13	Mapping entry 13	UDINT	RW	No	0 to 0xFFFFFFFF (default: 0)	Yes
	14	Mapping entry 14	UDINT	RW	No	0 to 0xFFFFFFFF (default: 0)	Yes
	15	Mapping entry 15	UDINT	RW	No	0 to 0xFFFFFFFF (default: 0)	Yes
	16	Mapping entry 16	UDINT	RW	No	0 to 0xFFFFFFFF (default: 0)	Yes

(2) 2nd Receive PDO Mapping

Index	Subindex	Name	Data Type	Access	PDO Mapping	Value	Saving to EEPROM
1601h	0	Number of objects in this PDO	USINT	RW	No	0 to 16 (default: 2)	Yes
	1	Mapping entry 1	UDINT	RW	No	0 to 0xFFFFFFFF (default: 0x60400010)	Yes
	2	Mapping entry 2	UDINT	RW	No	0 to 0xFFFFFFFF (default: 0x607A0020)	Yes
	3	Mapping entry 3	UDINT	RW	No	0 to 0xFFFFFFFF (default: 0)	Yes
	4	Mapping entry 4	UDINT	RW	No	0 to 0xFFFFFFFF (default: 0)	Yes
	5	Mapping entry 5	UDINT	RW	No	0 to 0xFFFFFFFF (default: 0)	Yes
	6	Mapping entry 6	UDINT	RW	No	0 to 0xFFFFFFFF (default: 0)	Yes
	7	Mapping entry 7	UDINT	RW	No	0 to 0xFFFFFFFF (default: 0)	Yes
	8	Mapping entry 8	UDINT	RW	No	0 to 0xFFFFFFFF (default: 0)	Yes
	9	Mapping entry 9	UDINT	RW	No	0 to 0xFFFFFFFF (default: 0)	Yes
	10	Mapping entry 10	UDINT	RW	No	0 to 0xFFFFFFFF (default: 0)	Yes
	11	Mapping entry 11	UDINT	RW	No	0 to 0xFFFFFFFF (default: 0)	Yes
	12	Mapping entry 12	UDINT	RW	No	0 to 0xFFFFFFFF (default: 0)	Yes
	13	Mapping entry 13	UDINT	RW	No	0 to 0xFFFFFFFF (default: 0)	Yes
	14	Mapping entry 14	UDINT	RW	No	0 to 0xFFFFFFFF (default: 0)	Yes
	15	Mapping entry 15	UDINT	RW	No	0 to 0xFFFFFFFF (default: 0)	Yes
	16	Mapping entry 16	UDINT	RW	No	0 to 0xFFFFFFFF (default: 0)	Yes

(3) 3rd Receive PDO Mapping

Index	Subindex	Name	Data Type	Access	PDO Mapping	Value	Saving to EEPROM
1602h	0	Number of objects in this PDO	USINT	RW	No	0 to 16 (default: 2)	No
	1	Mapping entry 1	UDINT	RW	No	0 to 0xFFFFFFFF (default: 0x60400010)	No
	2	Mapping entry 2	UDINT	RW	No	0 to 0xFFFFFFFF (default: 0x60FF0020)	No
	3	Mapping entry 3	UDINT	RW	No	0 to 0xFFFFFFFF (default: 0)	No
	4	Mapping entry 4	UDINT	RW	No	0 to 0xFFFFFFFF (default: 0)	No
	5	Mapping entry 5	UDINT	RW	No	0 to 0xFFFFFFFF (default: 0)	No
	6	Mapping entry 6	UDINT	RW	No	0 to 0xFFFFFFFF (default: 0)	No
	7	Mapping entry 7	UDINT	RW	No	0 to 0xFFFFFFFF (default: 0)	No
	8	Mapping entry 8	UDINT	RW	No	0 to 0xFFFFFFFF (default: 0)	No
	9	Mapping entry 9	UDINT	RW	No	0 to 0xFFFFFFFF (default: 0)	No
	10	Mapping entry 10	UDINT	RW	No	0 to 0xFFFFFFFF (default: 0)	No
	11	Mapping entry 11	UDINT	RW	No	0 to 0xFFFFFFFF (default: 0)	No
	12	Mapping entry 12	UDINT	RW	No	0 to 0xFFFFFFFF (default: 0)	No
	13	Mapping entry 13	UDINT	RW	No	0 to 0xFFFFFFFF (default: 0)	No
	14	Mapping entry 14	UDINT	RW	No	0 to 0xFFFFFFFF (default: 0)	No
	15	Mapping entry 15	UDINT	RW	No	0 to 0xFFFFFFFF (default: 0)	No
	16	Mapping entry 16	UDINT	RW	No	0 to 0xFFFFFFFF (default: 0)	No

(4) 4th Receive PDO Mapping

Index	Subindex	Name	Data Type	Access	PDO Mapping	Value	Saving to EEPROM
1603h	0	Number of objects in this PDO	USINT	RW	No	0 to 16 (default: 2)	No
	1	Mapping entry 1	UDINT	RW	No	0 to 0xFFFFFFFF (default: 0x60400010)	No
	2	Mapping entry 2	UDINT	RW	No	0 to 0xFFFFFFFF (default: 0x60710010)	No
	3	Mapping entry 3	UDINT	RW	No	0 to 0xFFFFFFFF (default: 0)	No
	4	Mapping entry 4	UDINT	RW	No	0 to 0xFFFFFFFF (default: 0)	No
	5	Mapping entry 5	UDINT	RW	No	0 to 0xFFFFFFFF (default: 0)	No
	6	Mapping entry 6	UDINT	RW	No	0 to 0xFFFFFFFF (default: 0)	No
	7	Mapping entry 7	UDINT	RW	No	0 to 0xFFFFFFFF (default: 0)	No
	8	Mapping entry 8	UDINT	RW	No	0 to 0xFFFFFFFF (default: 0)	No
	9	Mapping entry 9	UDINT	RW	No	0 to 0xFFFFFFFF (default: 0)	No
	10	Mapping entry 10	UDINT	RW	No	0 to 0xFFFFFFFF (default: 0)	No
	11	Mapping entry 11	UDINT	RW	No	0 to 0xFFFFFFFF (default: 0)	No
	12	Mapping entry 12	UDINT	RW	No	0 to 0xFFFFFFFF (default: 0)	No
	13	Mapping entry 13	UDINT	RW	No	0 to 0xFFFFFFFF (default: 0)	No
	14	Mapping entry 14	UDINT	RW	No	0 to 0xFFFFFFFF (default: 0)	No
	15	Mapping entry 15	UDINT	RW	No	0 to 0xFFFFFFFF (default: 0)	No
	16	Mapping entry 16	UDINT	RW	No	0 to 0xFFFFFFFF (default: 0)	No

Information

If you are connecting the advanced safety module to the SERVOPACK, there is a Receive PDO Mapping object for the advanced safety module (FSoE Slave). Refer to the following manual for details.

Σ-X-Series AC Servo Drive Advanced Safety Module with Safety over EtherCAT (FSoE) Communications References Product Manual (Manual No.: SIEP C710812 25)

15.3.2 Transmit PDO Mapping (1A00h to 1A03h)

(1) 1st Transmit PDO Mapping

Index	Subindex	Name	Data Type	Access	PDO Mapping	Value	Saving to EEPROM
1A00h	0	Number of objects in this PDO	USINT	RW	No	0 to 16 (default: 8)	Yes
	1	Mapping entry 1	UDINT	RW	No	0 to 0xFFFFFFFF (default: 0x60410010)	Yes
	2	Mapping entry 2	UDINT	RW	No	0 to 0xFFFFFFFF (default: 0x60640020)	Yes
	3	Mapping entry 3	UDINT	RW	No	0 to 0xFFFFFFFF (default: 0x60770010)	Yes
	4	Mapping entry 4	UDINT	RW	No	0 to 0xFFFFFFFF (default: 0x60F40020)	Yes
	5	Mapping entry 5	UDINT	RW	No	0 to 0xFFFFFFFF (default: 0x60610008)	Yes
	6	Mapping entry 6	UDINT	RW	No	0 to 0xFFFFFFFF (default: 0x00000008)	Yes
	7	Mapping entry 7	UDINT	RW	No	0 to 0xFFFFFFFF (default: 0x60B90010)	Yes
	8	Mapping entry 8	UDINT	RW	No	0 to 0xFFFFFFFF (default: 0x60BA0020)	Yes
	9	Mapping entry 9	UDINT	RW	No	0 to 0xFFFFFFFF (default: 0)	Yes
	10	Mapping entry 10	UDINT	RW	No	0 to 0xFFFFFFFF (default: 0)	Yes
	11	Mapping entry 11	UDINT	RW	No	0 to 0xFFFFFFFF (default: 0)	Yes
	12	Mapping entry 12	UDINT	RW	No	0 to 0xFFFFFFFF (default: 0)	Yes
	13	Mapping entry 13	UDINT	RW	No	0 to 0xFFFFFFFF (default: 0)	Yes
	14	Mapping entry 14	UDINT	RW	No	0 to 0xFFFFFFFF (default: 0)	Yes
	15	Mapping entry 15	UDINT	RW	No	0 to 0xFFFFFFFF (default: 0)	Yes
	16	Mapping entry 16	UDINT	RW	No	0 to 0xFFFFFFFF (default: 0)	Yes

(2) 2nd Transmit PDO Mapping

Index	Subindex	Name	Data Type	Access	PDO Mapping	Value	Saving to EEPROM
1A01h	0	Number of objects in this PDO	USINT	RW	No	0 to 16 (default: 2)	Yes
	1	Mapping entry 1	UDINT	RW	No	0 to 0xFFFFFFFF (default: 0x60410010)	Yes
	2	Mapping entry 2	UDINT	RW	No	0 to 0xFFFFFFFF (default: 0x60640020)	Yes
	3	Mapping entry 3	UDINT	RW	No	0 to 0xFFFFFFFF (default: 0)	Yes
	4	Mapping entry 4	UDINT	RW	No	0 to 0xFFFFFFFF (default: 0)	Yes
	5	Mapping entry 5	UDINT	RW	No	0 to 0xFFFFFFFF (default: 0)	Yes
	6	Mapping entry 6	UDINT	RW	No	0 to 0xFFFFFFFF (default: 0)	Yes
	7	Mapping entry 7	UDINT	RW	No	0 to 0xFFFFFFFF (default: 0)	Yes
	8	Mapping entry 8	UDINT	RW	No	0 to 0xFFFFFFFF (default: 0)	Yes
	9	Mapping entry 9	UDINT	RW	No	0 to 0xFFFFFFFF (default: 0)	Yes
	10	Mapping entry 10	UDINT	RW	No	0 to 0xFFFFFFFF (default: 0)	Yes
	11	Mapping entry 11	UDINT	RW	No	0 to 0xFFFFFFFF (default: 0)	Yes
	12	Mapping entry 12	UDINT	RW	No	0 to 0xFFFFFFFF (default: 0)	Yes
	13	Mapping entry 13	UDINT	RW	No	0 to 0xFFFFFFFF (default: 0)	Yes
	14	Mapping entry 14	UDINT	RW	No	0 to 0xFFFFFFFF (default: 0)	Yes
	15	Mapping entry 15	UDINT	RW	No	0 to 0xFFFFFFFF (default: 0)	Yes
	16	Mapping entry 16	UDINT	RW	No	0 to 0xFFFFFFFF (default: 0)	Yes

(3) 3rd Transmit PDO Mapping

Index	Subindex	Name	Data Type	Access	PDO Mapping	Value	Saving to EEPROM
1A02h	0	Number of objects in this PDO	USINT	RW	No	0 to 16 (default: 2)	No
	1	Mapping entry 1	UDINT	RW	No	0 to 0xFFFFFFFF (default: 0x60410010)	No
	2	Mapping entry 2	UDINT	RW	No	0 to 0xFFFFFFFF (default: 0x60640020)	No
	3	Mapping entry 3	UDINT	RW	No	0 to 0xFFFFFFFF (default: 0)	No
	4	Mapping entry 4	UDINT	RW	No	0 to 0xFFFFFFFF (default: 0)	No
	5	Mapping entry 5	UDINT	RW	No	0 to 0xFFFFFFFF (default: 0)	No
	6	Mapping entry 6	UDINT	RW	No	0 to 0xFFFFFFFF (default: 0)	No
	7	Mapping entry 7	UDINT	RW	No	0 to 0xFFFFFFFF (default: 0)	No
	8	Mapping entry 8	UDINT	RW	No	0 to 0xFFFFFFFF (default: 0)	No
	9	Mapping entry 9	UDINT	RW	No	0 to 0xFFFFFFFF (default: 0)	No
	10	Mapping entry 10	UDINT	RW	No	0 to 0xFFFFFFFF (default: 0)	No
	11	Mapping entry 11	UDINT	RW	No	0 to 0xFFFFFFFF (default: 0)	No
	12	Mapping entry 12	UDINT	RW	No	0 to 0xFFFFFFFF (default: 0)	No
	13	Mapping entry 13	UDINT	RW	No	0 to 0xFFFFFFFF (default: 0)	No
	14	Mapping entry 14	UDINT	RW	No	0 to 0xFFFFFFFF (default: 0)	No
	15	Mapping entry 15	UDINT	RW	No	0 to 0xFFFFFFFF (default: 0)	No
	16	Mapping entry 16	UDINT	RW	No	0 to 0xFFFFFFFF (default: 0)	No

(4) 4th Transmit PDO Mapping

Index	Subindex	Name	Data Type	Access	PDO Mapping	Value	Saving to EEPROM
1A03h	0	Number of objects in this PDO	USINT	RW	No	0 to 16 (default: 3)	No
	1	Mapping entry 1	UDINT	RW	No	0 to 0xFFFFFFFF (default: 0x60410010)	No
	2	Mapping entry 2	UDINT	RW	No	0 to 0xFFFFFFFF (default: 0x60640020)	No
	3	Mapping entry 3	UDINT	RW	No	0 to 0xFFFFFFFF (default: 0x60770010)	No
	4	Mapping entry 4	UDINT	RW	No	0 to 0xFFFFFFFF (default: 0)	No
	5	Mapping entry 5	UDINT	RW	No	0 to 0xFFFFFFFF (default: 0)	No
	6	Mapping entry 6	UDINT	RW	No	0 to 0xFFFFFFFF (default: 0)	No
	7	Mapping entry 7	UDINT	RW	No	0 to 0xFFFFFFFF (default: 0)	No
	8	Mapping entry 8	UDINT	RW	No	0 to 0xFFFFFFFF (default: 0)	No
	9	Mapping entry 9	UDINT	RW	No	0 to 0xFFFFFFFF (default: 0)	No
	10	Mapping entry 10	UDINT	RW	No	0 to 0xFFFFFFFF (default: 0)	No
	11	Mapping entry 11	UDINT	RW	No	0 to 0xFFFFFFFF (default: 0)	No
	12	Mapping entry 12	UDINT	RW	No	0 to 0xFFFFFFFF (default: 0)	No
	13	Mapping entry 13	UDINT	RW	No	0 to 0xFFFFFFFF (default: 0)	No
	14	Mapping entry 14	UDINT	RW	No	0 to 0xFFFFFFFF (default: 0)	No
	15	Mapping entry 15	UDINT	RW	No	0 to 0xFFFFFFFF (default: 0)	No
	16	Mapping entry 16	UDINT	RW	No	0 to 0xFFFFFFFF (default: 0)	No

Information

If you are connecting the advanced safety module to the SERVOPACK, there is a Receive PDO Mapping object for the advanced safety module (FSoE Slave). Refer to the following manual for details.

Σ-X-Series AC Servo Drive Advanced Safety Module with Safety over EtherCAT (FSoE) Communications References Product Manual (Manual No.: SIEP C710812 25)

15.4 Sync Manager Communication Objects

15.4.1 Sync Manager Communication Type (1C00h)

Index	Subindex	Name	Data Type	Access	PDO Mapping	Value	Saving to EEPROM
1C00h	0	Number of used Sync Manager channels	USINT	RO	No	4	No
	1	Communication type sync manager 0	USINT	RO	No	1 (mailbox receive (master → slave))	No
	2	Communication type sync manager 1	USINT	RO	No	2 (mailbox send (slave → master))	No
	3	Communication type sync manager 2	USINT	RO	No	3 (process data output (master → slave))	No
	4	Communication type sync manager 3	USINT	RO	No	4 (process data input (slave → master))	No

15.4.2 Sync Manager PDO Assignment (1C10h-1C13h)

This object defines which PDOs will be transferred in the process data communications.

Index	Subindex	Name	Data Type	Access	PDO Mapping	Value	Saving to EEPROM
1C10h	0	Sync Manager PDO Assignment 0	USINT	RO	No	0	No
1C11h	0	Sync Manager PDO Assignment 1	USINT	RO	No	0	No
1C12h	0	Number of assigned PDOs	USINT	RO	No	0 to 2 (default: 1)	Yes
	1	Index of assigned RxPDO 1	UINT	RW	No	0x1600 to 0x1603 (default: 0x1601)	Yes
	2	Index of assigned RxPDO 2	UINT	RW	No	0x1600 to 0x1603 (default: 0x1600)	Yes
1C13h	0	Number of assigned PDOs	USINT	RO	No	0 to 2 (default: 1)	Yes
	1	Index of assigned TxPDO 1	UINT	RW	No	0x1A00 to 0x1A03 (default: 0x1A01)	Yes
	2	Index of assigned TxPDO 2	UINT	RW	No	0x1A00 to 0x1A03 (default: 0x1A00)	Yes

Objects 1C12h and 1C13h can be changed when the EtherCAT Network Module is in the Pre-Operational state. Set subindex 1 or 2 only after you write 0 to subindex 0.

Information

You can assign the following objects when the advanced safety module is connected to the SERVOPACK.

- Index of assigned RxPDO 1 (1C12h: 1) and Index of assigned RxPDO 2 (1C12h: 2): Receive PDO Mapping objects for the advanced safety module (FSoE Slave)
- Index of assigned TxPDO 1 (1C13h: 1) and Index of assigned TxPDO 2 (1C13h: 2): Transmit PDO Mapping objects for the advanced safety module (FSoE Slave)

Refer to the following manual for details.

Σ-X-Series AC Servo Drive Advanced Safety Module with Safety over EtherCAT (FSoE) Communications References Product Manual (Manual No.: SIEP C710812 25)

15.4.3 Sync Manager Synchronization (1C32h, 1C33h)

(1) Sync Manager 2 (Process Data Output) Synchronization

Index	Subindex	Name	Data Type	Access	PDO Mapping	Value	Saving to EEPROM
1C32h	0	Number of Synchronization Parameters	USINT	RO	No	32	No
	1	Synchronization type	UINT	RO	No	2	No
	2	Cycle time	UDINT	RO	No	– [ns]	No
	3	Shift time	UDINT	RW	No	62500 to Sync0 event cycle (default: 62500) [ns]	Yes
	4	Synchronization types supported	UINT	RO	No	0x0025	No
	5	Minimum cycle time	UDINT	RO	No	62500 [ns]	No
	6	Calc and copy time	UDINT	RO	No	62500 [ns]	No
	7	Reserved (Minimum Delay Time)	UDINT	RO	No	0	No
	8	Reserved (Get Cycle Time)	UINT	RO	No	0	No
	9	Delay time	UDINT	RO	No	0 [ns]	No
	10	Sync0 cycle time	UDINT	RO	No	–	No
	11	SM event missed counter	UINT	RO	No	–	No
	12	Reserved (Cycle Time Too Small)	UINT	RO	No	0	No
	13	Reserved (Shift Time Too Short)	UINT	RO	No	0	No
	14	Reserved (RxPDO Toggle Failed)	UINT	RO	No	0	No
	15	Reserved (Minimum Cycle Distance)	UDINT	RO	No	0	No
	16	Reserved (Maximum Cycle Distance)	UDINT	RO	No	0	No
	17	Minimum SM SYNC distance	UDINT	RO	No	–	No
	18	Maximum SM SYNC distance	UDINT	RO	No	–	No
	32	Sync Error	BOOL	RO	No	0	No

Refer to the following table for details on the subindex values of index 1C32h.

Subindex	Description
1	Current status of DC mode 0: Free-Run (DC not used, no PDO mapping) 1: Free-Run (DC not used, with PDO mapping) 2: DC Sync0 (DC used)
2	Sync0 event cycle [ns] (The value is set by the master via an ESC register.) Range and setting increment: 62500 × n (n = 1 to 64)
3	The time between the Sync0 event and Outputs Valid (i.e., the time from Sync0 until the output data is input to the SERVOPACK). (unit: ns) Range: 62500 to Sync0 event cycle Setting increment: 62500 × n (n = 1 to)

Continued on next page.

Continued from previous page.

Subindex	Description
4	Bit 0 = 1: Free-Run supported. Bits 2 to 4 = 001: DC Sync0 supported. Bits 5 and 6 = 00: Output shift not supported.
10	Same as subindex 2
17	The minimum value of the interrupt time interval at which the reception (SM2) event and synchronization (Sync0) event are captured.
18	The maximum value of the interrupt time interval at which the reception (SM2) event and synchronization (Sync0) event are captured.
32	Synchronization error status 0: No synchronization error 1: Synchronization error

(2) Sync Manager 3 (Process Data Input) Synchronization

Index	Subindex	Name	Data Type	Access	PDO Mapping	Value	Saving to EEPROM
1C33h	0	Number of Synchronization Parameters	USINT	RO	No	32	No
	1	Synchronization type	UINT	RO	No	–	No
	2	Cycle time	UDINT	RO	No	–	No
	3	Shift time	UDINT	RW	No	0 to Sync0 event cycle - 62500 (default: 0) [ns]	Yes
	4	Synchronization types supported	UINT	RO	No	0x0025	No
	5	Minimum cycle time	UDINT	RO	No	62500 [ns]	No
	6	Calc and copy time	UDINT	RO	No	62500 [ns]	No
	7	Reserved (Minimum Delay Time)	UDINT	RO	No	0	No
	8	Reserved (Get Cycle Time)	UINT	RO	No	0	No
	9	Delay time	UDINT	RO	No	0	No
	10	Sync0 cycle time	UDINT	RO	No	–	No
	11	SM event missed counter	UINT	RO	No	–	No
	12	Reserved (Cycle Time Too Small)	UINT	RO	No	0	No
	13	Reserved (Shift Time Too Short)	UINT	RO	No	0	No
	14	Reserved (RxPDO Toggle Failed)	UINT	RO	No	0	No
	15	Reserved (Minimum Cycle Distance)	UDINT	RO	No	0	No
	16	Reserved (Maximum Cycle Distance)	UDINT	RO	No	0	No
	17	Minimum SM SYNC distance	UDINT	RO	No	–	No
	18	Maximum SM SYNC distance	UDINT	RO	No	–	No
	32	Sync Error	BOOL	RO	No	0	No

Refer to the following table for details on the subindex values of index 1C33h.

Subindex	Description
1	1C32h: Same as 1
2	1C32h: Same as 2
3	The time between the Sync0 event and Outputs Valid (i.e., the time from Sync0 until the output data is input to the SERVOPACK). (unit: ns) Range: 0 to (Sync0 event cycle - 62500) Setting increment: 62500 × n (n = 1 to)
4	Bit 0 = 1: Free-Run supported. Bits 2 to 4 = 001: DC Sync0 supported. Bits 5 and 6 = 00:01: Input shift with local timer supported.
5	1C32h: Same as 5
10	1C32h: Same as 10
32	Synchronization error status 0: No synchronization error 1: Synchronization error

15.4.4 Sync Error Settings (10F1h)

Index	Subindex	Name	Data Type	Access	PDO Mapping	Value	Saving to EEPROM
10F1h	0	Number of entries	USINT	RO	No	2	No
	1	Reserved (Local Error Reaction)	UDINT	RW	No	0	No
	2	Sync error count limit	UINT	RW	No	0 to 15 (default: 9)	Yes

(1) 10F1h:2 Sync Error Counter Limit

This object defines the allowable number of failures when receiving process data. If the value of the internal error counter in the SERVOPACK exceeds the value of this object, the SERVOPACK will detect an EtherCAT Output Data Synchronization Error (A12h) and change the ESM state to SAFEOP.

The SERVOPACK increments the internal error counter by 3 if the process output data is not updated (i.e., if a reception event does not occur) when the synchronization event (Sync0) occurs. When the process output data is updated normally, the internal error counter is decremented by 1. The internal error counter is reset when the EtherCAT communications state changes from SAFEOP to OP.

An example of internal error counter operation is shown below.

Reception (SM2) event	1	0	1	0	1	0	1	0	1	0	1
SERVOPACK internal error counter (Error Counter Limit = 9)	0	3	2	5	4	7	6	9 (Error)	9	9	9

In this example, a failure in receiving the process data occurs every other DC (Sync0) cycle. After eight DC cycles, the internal error count reaches the Sync Error Count Limit, and an error occurs.

No alarm will be detected if the DC mode is disabled or when the Sync Error Count Limit is set to 0.

If an A12h (EtherCAT Output Data Synchronization Error) alarm occurs, check 1C32h:11 (SM2 event miss count) for an estimate of the frequency of reception failures. Use it as reference in setting the Sync Error Count Limit.

The number of reception failures for process data is given in 1C32h: 11. (This is not an internal error count. The counter is incremented each time there is a failure for one reception.)

Important

- Set a suitable cycle time for updating the process data according to the requirements of the application.
- Determine if the default setting of the Sync Error Counter Limit is suitable for the requirements of the application. With the default value of 9, network frames will be lost (SM2 reception events will not occur) three times consecutively before an alarm occurs in the SERVOPACK.
  If the setting of the Sync Error Counter Limit is too small, alarms will occur even when there is no problem in the application.
- For the test, carefully observe the installation guidelines for hardware to minimize the effects of noise and conduct the test in an environment that matches the actual operating environment of the application. If an alarm occurs after the test, reevaluate step 2.

15.5 Manufacturer Specific Objects

15.5.1 SERVOPACK Parameters (2000h to 26FFh)

Objects 2000h to 26FFh are mapped to SERVOPACK parameters (Pn□□□).

Object index 2□□□h corresponds to Pn□□□ in the SERVOPACK parameters (e.g., object 2100h is the same as Pn100).

15.5.2 User Parameter Configuration (2700h)

This object enables all user parameter settings and initializes all of the position data.

Index	Subindex	Name	Data Type	Access	PDO Mapping	Value	Saving to EEPROM
2700h	0	User Parameter Configuration	UDINT	RW	No	0 to 0xFFFFFFFF (default: 0)	No

If you change any of the following objects and restart operation without turning the power OFF and then ON again, you must execute this object to enable the new settings.

- Objects 2701h, 2702h, 2703h, and 2704h
- SERVOPACK parameters that require that the power be turned OFF and ON again to enable changes to the parameter settings

(1) Procedure

1. **Change the SERVOPACK to the Switch ON Disabled state.**
2. **Set the new parameter settings.**
3. **Set User Parameter Configuration (2700h) to 1. The parameter settings will be enabled.**

   After execution, object 2700h will automatically be reset to 0.

15.5.3 Position User Unit (2701h)

This object sets the user-defined position reference unit (Pos. unit).

The user-defined position reference unit is calculated with the following formula.

1 [Pos. unit] = (Position User Unit: Numerator (2701h: 1)/ Position User Unit: Denominator (2701h: 2)) [inc]

Index	Subindex	Name	Data Type	Access	PDO Mapping	Value	Saving to EEPROM
2701h	0	Number of entries	USINT	RO	No	2	No
	1	Numerator	UDINT	RW	No	1 to 1073741824 (default: 64)	Yes
	2	Denominator	UDINT	RW	No	1 to 1073741824 (default: 1)	Yes

Setting range: 0.001 ≤ Position User Unit: Numerator (2701h: 1)/ Position User Unit: Denominator (2701h: 2) ≤ 64000

Note:

If the setting range is exceeded, 040h (Parameter Setting Error) will occur.

15.5.4 Velocity User Unit (2702h)

This object sets the user-defined speed reference unit (Vel unit).

The user-defined speed reference unit is calculated with the following formula.

1 [Vel unit] = (Velocity User Unit: Numerator (2702h: 1)/Velocity User Unit: Denominator (2702h: 2)) [inc/s]

Index	Subindex	Name	Data Type	Access	PDO Mapping	Value	Saving to EEPROM
2702h	0	Number of entries	USINT	RO	No	2	No
	1	Numerator	UDINT	RW	No	1 to 1073741823 (default: 64)	Yes
	2	Denominator	UDINT	RW	No	1 to 1073741823 (default: 1)	Yes

Setting range: 1/256 ≤ Velocity User Unit: Numerator (2702h: 1)/Velocity User Unit: Denominator (2702h: 2) ≤ 33554432

Note:

If a value outside this range is set, an A20h alarm (Parameter Setting Error) will occur.

15.5.5 Acceleration User Unit (2703h)

This object sets the user-defined acceleration reference unit (Accunit).

The user-defined acceleration reference unit is calculated with the following formula.

1 [Accunit] = (Acceleration User Unit: Numerator (2703h: 1)/Acceleration User Unit: Denominator (2703h: 2)) × 10^4 [inc/s^2]

Index	Subindex	Name	Data Type	Access	PDO Mapping	Value	Saving to EEPROM
2703h	0	Number of entries	USINT	RO	No	2	No
	1	Numerator	UDINT	RW	No	1 to 1073741823 (default: 64)	Yes
	2	Denominator	UDINT	RW	No	1 to 1073741823 (default: 1)	Yes

Setting range: 1/256 ≤ Acceleration User Unit: Numerator (2703h: 1)/Acceleration User Unit: Denominator (2703h: 2) ≤ 1048576

Note:

If a value outside this range is set, an A20h alarm (Parameter Setting Error) will occur.

15.5.6 Torque User Unit (2704h)

This object sets the user-defined torque reference unit (Torque unit).

The user-defined speed torque unit is calculated with the following formula.

1 [Trq. unit] = (Torque User Unit: Numerator (2704h: 1)/Torque User Unit: Denominator (2704h: 2)) [%]

Index	Subindex	Name	Data Type	Access	PDO Mapping	Value	Saving to EEPROM
2704h	0	Number of entries	USINT	RO	No	2	No
	1	Numerator	UDINT	RW	No	1 to 1073741823 (default: 1)	Yes
	2	Denominator	UDINT	RW	No	1 to 1073741823 (default: 10)	Yes

Setting range: 1/256 ≤ Torque User Unit: Numerator (2704h: 1)/Torque User Unit: Denominator (2704h: 2) ≤ 1

Note:

If a value outside this range is set, an A20h alarm (Parameter Setting Error) will occur.

15.5.7 SERVOPACK Adjusting Command (2710h)

This object is used for SERVOPACK adjustment services (e.g., encoder setup or multiturn reset). Write data to subindex 1 to start command execution. Also, read the subindex 3 to obtain the response. If you cannot obtain the response by reading subindex 3, the first byte of the response data will give information about the progress of execution.

Index	Subindex	Name	Data Type	Access	PDO Mapping	Value	Saving to EEPROM
2710h	0	Number of entries	USINT	RO	No	3	No
	1	Command	STRING	RW	No	–	No
	2	Status	USINT	RO	No	–	No
	3	Reply	STRING	RO	No	–	No

Refer to the following table for details on the subindex values of index 2710h.

Subindex	Description
1	Bytes 0 to n: Service Request Data The command is executed when command data is written.
2	0: Command completed, no errors, and no response data 1: Command completed, no errors, and response data provided 2: Command completed, with errors, and no response data 3: Command completed with an error response 255: Command is being executed
3	Byte 0: Subindex 2 Byte 1: Not used Bytes 2 to n: Service response data

(1) Command/Response Data Format

Command Data (Service Request Data)		Response Data (Service Response Data)	
Byte	Description	Byte	Description
0	Reserved.	0	Status (same data as subindex 2)
1	Reserved.	1	Reserved.
2	CCMD (command code) 00: Read request 01: Write request	2	RCMD (echoback of CCMD)
3	CSIZE (CDATA data byte size)	3	RSIZE (R_DATA data byte size)
4 to 7	CADDRESS (address)	4 to 7	RADDRESS (echoback of CADDRESS)
8 to 15 *1	CDATA (writing data)	8 to 15 *1	R_DATA (read data)/ERROCODE

*1 This is the size set with CSIZE.
*2 This is the size set with RSIZE.

(2) Executable Adjustment Services

Adjustment Service	Request Code	Preparation before Execution	Processing Time	Execution Conditions
Absolute Encoder Reset	1008h	Required.	5 s max.	Absolute Encoder Reset cannot be executed in the following cases: • When Pn00C is set to n.□□□1 (enable tests without a motor) and an encoder is not connected • When an incremental encoder is connected • When Pn002 is set to n.□1□□ (use the encoder as an incremental encoder) • While the servo is ON
Autotune Motor Current Detection Signal Offset	100Eh	Not required.	5 s max.	Adjustment is disabled in the following cases. • While the main circuit power is OFF • While the servo is ON • While the servomotor is running
Multiturn Limit Setting	1013h	Required.	5 s max.	Multiturn Limit Setting cannot be executed in the following cases: • When Pn00C is set to n.□□□1 (enable tests without a motor) and an encoder is not connected • When an incremental encoder is connected • When Pn002 is set to n.□1□□ (use the encoder as an incremental encoder) • When A.CC0 (Multiturn Limit Disagreement) has not occurred
Triggers at Preset Positions	2025h	Required.	5 s max.	-

(3) How to Send a Command for Adjustment

1. **Send the following data and set the request code for the adjustment service to execute.**

   CCMD = 01h

   CSIZE = 02h

   CADDRESS = 00002000h

   CDATA = Request code of the adjustment service to execute

   Select the request code from the following table.

   ☞ *(2) Executable Adjustment Services on page 650*

   If the slave station receives the command normally, the Status field will be set to 1.

   If an error occurs, perform step 4 to stop execution.

2. **For an adjustment that requires preparations, send the following data.**

   If preparations before execution are not required, perform step 3.

   CCMD = 01h

   CSIZE = 02h

   CADDRESS = 00002001h

   CDATA = 0002h

   If the slave station receives the command normally, the Status field will be set to 1.

   If an error occurs, perform step 4 to stop execution.

3. **Send the following data to execute the adjustment service.**

   CCMD = 01h

   CSIZE = 02h

CADDRESS = 00002001h

CDATA = 0001h

If the slave station receives the command normally, the Status field will be set to 1.

If an error occurs, perform step 4 to stop execution.

4. **Send the following data to stop execution.**

CCMD = 01h

CSIZE = 02h

CADDRESS = 00002000h

CDATA = 0000h

If the slave station receives the command normally, the Status field will be set to 1.

(a) Example Settings for Triggers at Preset Positions

This section gives an example of saving the settings for triggers at preset positions to non-volatile memory.

Information

Refer to the following sections for details on the settings for triggers at preset positions.

☞ *15.5.15 Output Position Setting (2778h) on page 659*
☞ *15.5.16 Output Function Setting (2779h) on page 659*
☞ *15.5.17 Output Time Setting (277Ah) on page 659*
☞ *15.5.18 Output Distance Setting (277Bh) on page 659*
☞ *15.5.19 Output Position Correction Setting (277Ch) on page 659*

Use the following procedure after you configure these settings.

1. **Send the following data to set the request code to write to non-volatile memory.**
   - CCMD = 01h
   - CSIZE = 02h
   - CADDRESS = 00002000h
   - CDATA = 2025h
2. **Send the following data to perform the first processing for preparations to execute a write to non-volatile memory.**
   - CCMD = 01h
   - CSIZE = 02h
   - CADDRESS = 000020F0h
   - CDATA = 0000h
3. **Send the following data to perform the second processing for preparations to execute a write to non-volatile memory.**
   - CCMD = 01h
   - CSIZE = 04h
   - CADDRESS = 000020F2h
   - CDATA = F0000000
4. **Send the following data to perform the third processing for preparations to execute a write to non-volatile memory.**
   - CCMD = 01h
   - CSIZE = 02h
   - CADDRESS = 00002001h
   - CDATA = 0002h
5. **Send the following data to execute a write to non-volatile memory.**
   - CCMD = 01h
   - CSIZE = 02h
   - CADDRESS = 00002001h
   - CDATA = 0001h
6. **Send the following data to end the write to non-volatile memory.**
   - CCMD = 01h

- CSIZE = 02h
- CADDRESS = 00002000h
- CDATA = 0000h

15.5.8 Manufacturer Interpolation Data Configuration for 1st Profile (2730h) (Mode 2 Object)

This object sets how to use the interpolation position reference in Interpolation Data Record for 1st Profile (27C0h).

Index	Subindex	Name	Data Type	Access	PDO Mapping	Value	Saving to EEPROM
2730h	0	Number of entries	USINT	RO	No	9	No
	1	Maximum buffer size	UDINT	RO	No	254	No
	2	Actual buffer size	UDINT	RW	No	254	No
	3	Buffer organization	USINT	RW	No	0 to 1 (default: 0)	No
	4	Buffer position	UINT	RW	Yes	1 to 254 (default: 1)	No
	5	Size of data record	USINT	WO	No	1 to 1 (default: 1)	No
	6	Buffer clear	USINT	WO	No	0 to 1 (default: 0)	No
	7	Position data definition	USINT	RW	Yes	0 to 1 (default: 1)	No
	8	Position data polarity	USINT	RW	Yes	0 to 1 (default: 0)	No
	9	Behavior after reaching buffer position	USINT	RW	Yes	0 to 1 (default: 0)	No

(1) 2730h: 3 Buffer Organization

Value (Method)	Description
0	Uses the reference input buffer as a FIFO buffer.
1	Uses the reference input buffer is as a ring buffer.

Note:

Do not change this value while Enable Interpolation (6040h bit 4) is 1.

(2) 2730h: 4 Buffer Position

The object contains the entry point for the available area in the reference input buffer.

Note:

Do not change this value while Enable Interpolation (6040h bit 4) is 1.

(3) 2730h: 6 Buffer Clear

Value (Method)	Description
0	Disables the reference input buffer.
1	Enables the reference input buffer.

(4) 2730h: 7 Position Data Definition

Value (Method)	Description
0	Uses the value in the reference input buffer as an absolute value.
1	Uses the value in the reference input buffer as a relative value.

To enable changing this value, set the WritePointer (2741h: 2) and the ReadPointer (2741h: 1) to the same value.

(5) 2730h: 8 Position Data Polarity

Value (Method)	Description
0	Multiplies the value in the reference input buffer by 1.
1	Multiplies the value in the reference input buffer by -1.

This value is valid when Position data definition (2730h: 7) is 1.

To enable changing this value, set the WritePointer (2741h: 2) and the ReadPointer (2741h: 1) to the same value.

(6) 2730h: 9 Behavior after Reaching Buffer Position

Value (Method)	Description
0	Holds the value of the ReadPointer (2741h: 1) when the ReadPointer (2741h: 1) equals the WritePointer (2741h: 2) and Enable Interpolation is 0.
1	Initializes the value of the ReadPointer (2741h: 1) when the ReadPointer (2741h: 1) equals the WritePointer (2741h: 2) and Enable Interpolation is 0.

This value is valid when Buffer organization (2731h: 3) is 0.

15.5.9 Manufacturer Interpolation Data Configuration for 2nd Profile (2731h) (Mode 2 Object)

This object sets how to use the interpolation position reference in Interpolation Data Record for 2nd Profile (27C1h).

Index	Subindex	Name	Data Type	Access	PDO Mapping	Value	Saving to EEPROM
2731h	0	Number of entries	USINT	RO	No	9	No
	1	Maximum buffer size	UDINT	RO	No	254	No
	2	Actual buffer size	UDINT	RW	No	254	No
	3	Buffer organization	USINT	RW	No	0 to 1 (default: 0)	No
	4	Buffer position	UINT	RW	Yes	1 to 254 (default: 1)	No
	5	Size of data record	USINT	WO	No	1 to 1 (default: 1)	No
	6	Buffer clear	USINT	WO	No	0 to 1 (default: 0)	No
	7	Position data definition	USINT	RW	Yes	0 to 1 (default: 1)	No
	8	Position data polarity	USINT	RW	Yes	0 to 1 (default: 0)	No
	9	Behavior after reaching buffer position	USINT	RW	Yes	0 to 1 (default: 0)	No

(1) 2731h:3 Buffer Organization

Value (Method)	Description
0	Uses the reference input buffer as a FIFO buffer.
1	Uses the reference input buffer is as a ring buffer.

Note:

Do not change this value while Enable Interpolation (6040h bit 4) is 1.

(2) 2731h: 4 Buffer Position

This object contains the entry point for the available area in the reference input buffer.

Note:

Do not change this value while Enable Interpolation (6040h bit 4) is 1.

(3) 2731h: 6 Buffer Clear

Value (Method)	Description
0	Disables the reference input buffer.
1	Enables the reference input buffer.

(4) 2731h: 7 Position Data Definition

Value (Method)	Description
0	Uses the value in the reference input buffer as an absolute value.
1	Uses the value in the reference input buffer as a relative value.

To enable changing this value, set the WritePointer (2741h: 2) and the ReadPointer (2741h: 1) to the same value.

(5) 2731h: 8 Position Data Polarity

Value (Method)	Description
0	Multiplies the value in the reference input buffer by 1.
1	Multiplies the value in the reference input buffer by -1.

This value is valid when Position data definition (2731h: 7) is 1.

To enable changing this value, set the WritePointer (2741h: 2) and the ReadPointer (2741h: 1) to the same value.

(6) 2731h: 9 Behavior after Reaching Buffer Position

Value (Method)	Description
0	Holds the value of the ReadPointer (2741h: 1) when the ReadPointer (2741h: 1) equals the WritePointer (2741h: 2) and Enable Interpolation is 0.
1	Initializes the value of the ReadPointer (2741h: 1) when the ReadPointer (2741h: 1) equals the WritePointer (2741h: 2) and Enable Interpolation is 0.

This value is valid when Buffer organization (2731h: 3) is 0.

15.5.10 Interpolation Profile Select (2732h) (Mode 2 Object)

This object is used to select the type of interpolation profile to use.

Change the interpolation profile only after execution of the current profile has been completed.

You can change the object when Enable Interpolation (6040h bit 4) is 0.

Index	Subindex	Name	Data Type	Access	PDO Mapping	Value	Saving to EEPROM
2732h	0	Interpolation Profile Select	USINT	RW	Yes	0 to 1 (default: 0)	No

(1) Data Description

Value (Method)	Description
0	Uses the 1st profile. (Interpolation Data Record for 1st Profile (27C0h) and Manufacturer Interpolation Data Configuration for 1st Profile (2730h) are enabled.)
1	Uses the 2nd profile. (Interpolation Data Record for 2nd Profile (27C1h) and Manufacturer Interpolation Data Configuration for 2nd Profile (2731h) are enabled.)

Note:

Do not change this value while Enable Interpolation (6040h bit 4) is 1.

15.5.11 Interpolation Data Read/Write Pointer Position Monitor (2741h) (Mode 2 Object)

This object gives the current values of the read and write pointers for the reference input buffers in the EtherCAT network module.

Index	Subindex	Name	Data Type	Access	PDO Mapping	Value	Saving to EEPROM
2741h	0	Number of entries	USINT	RO	No	2	No
	1	Interpolation data read pointer Position	UINT	RO	Yes	1 to 254 (default: –)	No
	2	Interpolation data write pointer Position	UINT	RO	Yes	1 to 254 (default: –)	No

(1) 2741h: 1 Interpolation Data Read Pointer Position

This object gives the current value of the read pointer for the reference input buffer in the EtherCAT network module.

(2) 2741h: 2 Interpolation Data Write Pointer Position

This object gives the current value of the write pointer for the reference input buffer in the EtherCAT network module.

15.5.12 Sensing Data Monitor (2770h, 2771h, 2772h)

This object is used to monitor the values of sensing data given the following table.

Index	Subindex	Name	Data Type	Access	PDO Mapping	Value	Saving to EEPROM
2770h	0	Number of entries	USINT	RO	No	21	No
	1	Estimated vibration	DINT	RO	Yes	– [Overspeed detection speed/ 1000000h]	No
	2	Estimated external disturbance torque	DINT	RO	Yes	– [Maximum torque/1000000h]	No
	3	Main circuit DC voltage	INT	RO	Yes	– [V]	No
	4	Un009: Accumulated Load Ratio	UINT	RO	No	– [%]	No
	5	Un00A: Regenerative Load Ratio	UINT	RO	No	– [%]	No
	6	Un078: Maximum Value of Amplitude of Estimated Vibration	INT	RO	No	– [min^{-1}]	No
	7	Un07A: Maximum Value of Estimated External Disturbance Torque	INT	RO	No	– [%]	No
	8	Un07B: Minimum Value of Estimated External Disturbance Torque	INT	RO	No	– [%]	No
	9	Un07C: Identified Moment of Inertia Ratio	UDINT	RO	Yes	–	No
	10	Un104: Number of Serial Encoder Communications Errors	UINT	RO	No	– [Time]	No
2770h	11	Un105: Settling Time	UINT	RO	No	– [0.1 ms]	No
	12	Un106: Amount of Overshoot	UDINT	RO	No	– [Pos. unit]	No
	13	Un107: Residual Vibration Frequency	UINT	RO	No	– [0.1 Hz]	No
	14	Un108: Maximum Settling Time	UINT	RO	No	– [0.1 ms]	No
	15	Un109: Maximum Amount of Overshoot	UDINT	RO	No	– [Pos. unit]	No
	16	Un145: Maximum Value of Accumulated Load Ratio	UINT	RO	No	– [%]	No
	17	Un14E: Margin until Overload	INT	RO	Yes	– [0.01%]	No
	18	Reserved	UDINT	RO	Yes	–	No
	19	Reserved	UDINT	RO	Yes	–	No
	20	Error detection trace counter	UDINT	RO	No	–	No
	21	Error detection trace error rate	UDINT	RO	No	–	No
	22	Un13C: Margin until Regenerative Overload	INT	RO	No	– [0.01%]	No
	23	Un13E: Margin until Undervoltage	INT	RO	No	– [V]	No
	24	Un13F: Margin until Overvoltage	INT	RO	Yes	– [V]	No
	25	Un173: Temperature Margin until SERVOPACK Overheats	INT	RO	No	– [°C]	No
	26	Reserved	UDINT	RO	Yes	–	No

Continued on next page.

Continued from previous page.

Index	Subindex	Name	Data Type	Access	PDO Mapping	Value	Saving to EEPROM
2771h	0	Number of entries	USINT	RO	No	13	No
	1	Un174: Temperature Margin until Servomotor Overheats	INT	RO	No	– [°C]	No
	2	Un177: Encoder Power Supplied Time	UDINT	RO	No	– [100 ms]	No
	3	Reserved	UINT	RO	No	–	No
	4	Un17A: Encoder Power Supply Voltage	INT	RO	No	– [0.1 V]	No
	5	Un17B: Encoder Battery Voltage	UINT	RO	No	– [0.1 V]	No
	6	Un181: Motor Total Number of Rotations	UDINT	RO	No	– [100 rev]	No
	7	Un183: Maintenance Prediction Monitor - Bearings	UINT	RO	No	– [0.01%]	No
	8	Un184: Maintenance Prediction Monitor - Oil Seal	UINT	RO	No	– [0.01%]	No
	9	Un190: Motor Vibration in X-Axis Direction	DINT	RO	Yes	– [0.0001 G]	No
	10	Un191: Motor Vibration in Y-Axis Direction	DINT	RO	Yes	– [0.0001 G]	No
	11	Un192: Motor Vibration in Z-Axis Direction	DINT	RO	Yes	– [0.0001 G]	No
	12	Un193: Motor Vibration XYZ Composite Value	UDINT	RO	Yes	– [0.0001 G]	No
	13	Un194: Maximum Motor Vibration	UDINT	RO	No	– [0.0001 G]	No
	14	Linear Motor Overheat Protection Input	INT	RO	No	– [0.01 V]	No
2772h	0	Number of entries	USINT	RO	No	9	No
	1	Un025: SERVOPACK Installation Environment Monitor	INT	RO	No	– [%]	No
	2	Un026: Servomotor Installation Environment Monitor	INT	RO	No	– [%]	No
	3	Un027: Built-in Fan Remaining Life Ratio	UINT	RO	No	– [0.01%]	No
	4	Un028: Capacitor Remaining Life Ratio	UINT	RO	No	– [0.01%]	No
	5	Un029: Surge Prevention Circuit Remaining Life Ratio	UINT	RO	No	– [0.01%]	No
	6	Un02A: Dynamic Brake Circuit Remaining Life Ratio	UINT	RO	No	– [0.01%]	No
	7	Un032: Instantaneous Power	INT	RO	No	– [W]	No
	8	Un033: Power Consumption	DINT	RO	No	– [0.001 Wh]	No
	9	Un034: Cumulative Power Consumption	DINT	RO	No	– [Wh]	No

15.5.13 Σ-LINK II Data Monitor (2773h, 2774h)

This object is used to monitor the values of data in the Σ-LINK II register area given in the following table.

Index	Subindex	Name	Data Type	Access	PDO Mapping	Value	Saving to EEPROM
2773h	0	Number of entries	USINT	RO	No	11	No
	1	Σ-LINK II response data 1	UDINT	RO	Yes	–	No
	2	Σ-LINK II response data 2	UDINT	RO	Yes	–	No
	3	Σ-LINK II response data 3	UDINT	RO	Yes	–	No
	4	Σ-LINK II response data 4	UDINT	RO	Yes	–	No
	5	Σ-LINK II response data 5	UDINT	RO	Yes	–	No
	6	Σ-LINK II response data 6	UDINT	RO	Yes	–	No
	7	Σ-LINK II response data 7	UDINT	RO	Yes	–	No
	8	Σ-LINK II response data 8	UDINT	RO	Yes	–	No
	9	Σ-LINK II data status information	UDINT	RO	Yes	–	No
	10	Reserved	UDINT	RO	Yes	–	No
	11	Reserved	UDINT	RO	Yes	–	No
2774h	0	Number of entries	USINT	RO	No	4	No
	1	Σ-LINK II command data 1	UDINT	RW	Yes	0h to FFFFFFFFh (default: –)	No
	2	Σ-LINK II command data 2	UDINT	RW	Yes	0h to FFFFFFFFh (default: –)	No
	3	Σ-LINK II command data 3	UDINT	RW	Yes	0h to FFFFFFFFh (default: –)	No
	4	Σ-LINK II command data 4	UDINT	RW	Yes	0h to FFFFFFFFh (default: –)	No

15.5.14 Controlword_VenderS (2776h)

This object performs vendor-specific device control.

Index	Subindex	Name	Data Type	Access	PDO Mapping	Value	Saving to EEPROM
2776h	0	Controlword_VenderS	UINT	RW	Yes	0 to 0xFFFF (default: –)	No

(1) Controlword_VenderS Bits

Bit	Function	Description
0	EXT trace	0: EXT trace OFF 1: EXT trace ON Data can be acquired at the preferred timing by setting "EXT Trace" to a data trace trigger in the SigmaWin+ and controlling bit 0 of this object.
1	Preset position forced stop	0: Disable forced stop at preset position. 1: Enable forced stop at preset position.
2 to 11	– (Reserved)	–
12, 13	G-Sel	Used to change the gain. 0: Select gain 1 1: Select gain 2 2: Select gain 3 3: Select gain 4
14, 15	– (Reserved)	–

15.5.15 Output Position Setting (2778h)

This object is used to set the output position for triggers at preset positions.

Index	Subindex	Name	Data Type	Access	PDO Mapping	Value	Saving to EEPROM
2778h	0	Number of entries	USINT	RO	No	32	No
	1 to 6	Output Position1 to Output Position6	DINT	RW	Yes	-2147483648 to 2147483647 (default: 0) [Pos. unit]	No
	7 to 32	Output Position7 to Output Position32	DINT	RW	No	-2147483648 to 2147483647 (default: 0) [Pos. unit]	No

15.5.16 Output Function Setting (2779h)

This object is used to select the output function for triggers at preset positions.

Index	Subindex	Name	Data Type	Access	PDO Mapping	Value	Saving to EEPROM
2779h	0	Number of entries	USINT	RO	No	32	No
	1 to 32	Output Function1 to Output Function32	UDINT	RW	No	0x00000000 to 0x00001282 (default: 0)	No

15.5.17 Output Time Setting (277Ah)

This object is used to set the output time for triggers at preset positions.

Index	Subindex	Name	Data Type	Access	PDO Mapping	Value	Saving to EEPROM
277Ah	0	Number of entries	USINT	RO	No	32	No
	1 to 32	Output Time1 to Output Time32	UDINT	RW	No	0 to 32767000 (default: 0) [μs]	No

15.5.18 Output Distance Setting (277Bh)

This object is used to set the output distance for triggers at preset positions.

Index	Subindex	Name	Data Type	Access	PDO Mapping	Value	Saving to EEPROM
277Bh	0	Number of entries	USINT	RO	No	32	No
	1 to 32	Output Distance1 to Output Distance32	UDINT	RW	No	0 to 0x7FFFFFFF (default: 0) [Pos. unit]	No

15.5.19 Output Position Correction Setting (277Ch)

This object is used to set output position correction for triggers at preset positions.

Index	Subindex	Name	Data Type	Access	PDO Mapping	Value	Saving to EEPROM
277Ch	0	Number of entries	USINT	RO	No	32	No
	1 to 32	Output Position Compensation1 to Output Position Compensation32	DINT	RW	No	-2147483648 to 2147483647 (default: 0) [Pos. unit]	No

15.5.20 Interpolation Data Record for 1st Profile (27C0h) (Mode 2 Object)

This object is used to set the interpolation position reference for the 1st profile in Buffer Strategies for the Interpolated Position Mode.

Set this object only after setting all of the items in Manufacturer Interpolation Data Configuration for 1st Profile (2730h).

After you set this object, set Enable Interpolation (6040h bit 4) to 1.

Index	Subindex	Name	Data Type	Access	PDO Mapping	Value	Saving to EEPROM
27C0h	0	Number of entries	USINT	RO	No	254	No
	1 to 254	1st set-point to 254 set-point	DINT	RW	No	-2147483648 to 2147483647 (default: 0)	No

15.5.21 Interpolation Data Record for 2nd Profile (27C1h) (Mode 2 Object)

This object is used to set the interpolation position reference for the 2nd profile in Buffer Strategies for the Interpolated Position Mode.

Set this object only after setting all of the items in Manufacturer Interpolation Data Configuration for 2nd Profile (2731h).

After you set this object, set Enable Interpolation (6040h bit 4) to 1.

Index	Subindex	Name	Data Type	Access	PDO Mapping	Value	Saving to EEPROM
27C1h	0	Number of entries	USINT	RO	No	254	No
	1 to 254	1st set-point to 254 set-point	DINT	RW	No	-2147483648 to 2147483647 (default: 0)	No

15.6 Device Control

15.6.1 Error Code (603Fh)

This object provides the SERVOPACK alarm/warning code of the last error that occurred.

Index	Subindex	Name	Data Type	Access	PDO Mapping	Value	Saving to EEPROM
603Fh	0	Error Code	UINT	RO	Yes	–	No

15.6.2 Controlword (6040h)

This object controls the device and operation mode.

Index	Subindex	Name	Data Type	Access	PDO Mapping	Value	Saving to EEPROM
6040h	0	Controlword	UINT	RW	Yes	0 to 0xFFFF (default: 0)	No

(1) Controlword Bits

Bit	Function	Description
0	Switch on	☞ *(a) Details on Bits 0 to 3 on page 661*
1	Enable voltage	
2	Quick stop	
3	Enable operation	
4 to 6	Operation mode specific	☞ *(b) Details on Bits 4 to 9 on page 662*
7	Fault reset	0→1: Alarm/warning reset.
8	Halt	☞ *(b) Details on Bits 4 to 9 on page 662*
9	Operation mode specific	
10	– (Reserved)	–
11	Positive torque limit	0: Disables Torque Limit Parameter (object 2404h). 1: Enables Torque Limit Parameter (object 2404h).
12	Negative torque limit	0: Disables Torque Limit Parameter (object 2405h). 1: Enables Torque Limit Parameter (object 2405h).
13 to 15	– (Reserved)	–

(a) Details on Bits 0 to 3

Bits 0 to 3: These bits function as the control command for the servo drive's state.

Command	Controlword Bits				
	Bit 7	Bit 3	Bit 2	Bit 1	Bit 0
Shutdown	0	X	1	1	0
Switch on	0	0	1	1	1
Switch on + Enable operation	0	1	1	1	1
Disable voltage	0	X	X	0	X

Continued on next page.

Continued from previous page.

Command	Controlword Bits				
	Bit 7	Bit 3	Bit 2	Bit 1	Bit 0
Quick stop	0	X	0	1	X
Disable operation	0	0	1	1	1
Enable operation	0	1	1	1	1

(b) Details on Bits 4 to 9

◆ Bits 4, 5, and 9: Profile Position Mode

Bit 9	Bit 5	Bit 4	Description
0	0	0 → 1	Starts the next positioning after the current positioning is completed (i.e., after the target is reached).
X	1	0 → 1	Starts the next positioning immediately.
1	0	0 → 1	Continues positioning with the current profile speed up to the current target position and then start the next positioning.

◆ Bits 6 and 8: Profile Position Mode

Bit	Function	Value	Description
6	Abs/rel	0	Treats the target position as an absolute value.
		1	Treats the target position as a relative value. (Treats it as the travel amount from the current target position.)
8	Halt	0	Executes or continues positioning.
		1	Stops the axis according to Halt Option Code (605Dh).

◆ Bits 4, 5, 6, 8, and 9: Homing Mode

Bit	Function	Value	Description
4	Homing operation start	0	Does not start homing.
		1	Starts or continues homing.
5	–	0	Reserved.
6	–	0	Reserved.
8	Halt	0	Enables bit 4.
		1	Stops the axis according to Halt Option Code (605Dh).
9	–	0	Reserved.

◆ Bits 4, 5, 6, 8, and 9: Cyclic Synchronous Position, Velocity, or Torque Mode

Bit	Function	Value	Description
4	–	0	Reserved.
5	–	0	Reserved.
6	–	0	Reserved.
8	Halt	0	Executes or continues operation.
		1	Stops the axis according to Halt Option Code (605Dh).
9	–	0	Reserved.

◆ Bits 4, 5, 6, 8, and 9: Interpolated Position Mode

Bit	Function	Value	Description
4	Enable interpolation	0	Disables interpolation.
		1	Enables interpolation.
5	–	0	Reserved.
6	–	0	Reserved.
8	Halt	0	Executes specification for bit 4.
		1	Stops the axis according to Halt Option Code (605Dh).
9	–	0	Reserved.

◆ Bits 4, 5, 6, 8, and 9: Profile Velocity/Torque Mode

Bit	Function	Value	Description
4	–	0	Reserved.
5	–	0	Reserved.
6	–	0	Reserved.
8	Halt	0	Executes or continues operation.
		1	Stops the axis according to Halt Option Code (605Dh).
9	–	0	Reserved.

15.6.3 Statusword (6041h)

Statusword contains the bits that give the current state of the servo drive and the operating state of the operation mode.

Index	Subindex	Name	Data Type	Access	PDO Mapping	Value	Saving to EEPROM
6041h	0	Statusword	UINT	RO	Yes	–	No

(1) Statusword Bits

Bit	Function	Description
0	Ready to Switch ON	☞ *(a) Details on Bits 0 to 7 on page 664*
1	Switched ON	
2	Operation Enabled	
3	Fault	
4	Voltage Enabled	
5	Quick Stop	
6	Switch ON Disabled	
7	Warning	
8	Reserved	–
9	Remote	Controlword (6040h) is being processed.
10	Operation Mode Specific	☞ *(c) Details on Bits 10, 12, and 13 on page 664*
11	Internal Limit Active	☞ *(b) Details on Bit 11 on page 664*
12, 13	Operation Mode Specific	☞ *(c) Details on Bits 10, 12, and 13 on page 664*

Continued on next page.

Continued from previous page.

Bit	Function	Description
14	Torque Limit Active	0: Torque limit is disabled. 1: Torque limit is enabled.
15	Safety Active	1: Safety function is active.

(a) Details on Bits 0 to 7

◆ Bits 0 to 7: Current State of Servo Drive

Statusword Bits								Servo Drive State
Bit 7	Bit 6	Bit 5	Bit 4	Bit 3	Bit 2	Bit 1	Bit 0	
X	0	X	X	0	0	0	0	Not ready to switch ON
X	1	X	X	0	0	0	0	Switch ON disabled
X	0	1	X	0	0	0	1	Ready to switch ON
X	0	1	X	0	0	1	1	Switched ON
X	0	1	X	0	1	1	1	Operation enabled
X	0	0	X	0	1	1	1	Quick stop active
X	0	X	X	1	1	1	1	Fault reaction active
X	0	X	X	1	0	0	0	Fault
X	X	X	1	X	X	X	X	Main power ON
1	X	X	X	X	X	X	X	Warning is occurred

(b) Details on Bit 11

- Bit 11: Internal limit active
  The internal limit is activated in the following cases:
  - The target position was limited by a software limit.
  - The N-OT or P-OT signal was activated.
  - The interpolation speed was exceeded in Interpolated Position Mode or Cyclic Position Mode.

If the interpolated reference speed exceeds the following speed range, the target position will be ignored.
(TargetPosition – position demand value) × (2701h:1)/(2701h:2) < 1073741824 [inc/Interpolation time period]

(c) Details on Bits 10, 12, and 13

◆ Bits 10, 12, and 13: Profile Position Mode

Bit	Meaning	Value	Description
10	Target reached	0	Halt (bit 8 in Controlword) = 0: The target position has not been reached. Halt (bit 8 in Controlword) = 1: The axis is decelerating.
		1	Halt (bit 8 in Controlword) = 0: The target position was reached. Halt (bit 8 in Controlword) = 1: The axis is stopped.
12	Set-point acknowledge	0	Processing of previous set point (reference) was completed and servo drive is waiting for a new set point.
		1	Processing the previous set point is still in process or a set point was acknowledged.
13	Following error	0	No following error has occurred.
		1	A following error occurred.

◆ Bits 10, 12, and 13: Homing Mode

Bit 13	Bit 12	Bit 10	Description
Homing error	Homing attained	Target reached	
0	0	0	Homing is in progress.
0	0	1	Homing was interrupted or has not yet started.
0	1	0	Home has been defined, but the operation is still in progress.
0	1	1	Homing was completed normally.
1	0	0	A homing error occurred and the speed is not 0.
1	0	1	A homing error occurred and the speed is 0.

◆ Bits 10, 12, and 13: Cyclic Synchronous Position, Velocity, or Torque Mode

Bit	State	Value	Description
10	Target reached	0	The target (position, speed, or torque) has not been reached (always 0 in Cyclic Torque Mode).
		1	The target (position, speed, or torque) was reached.
12	Target value ignored	0	The target value (position, speed, or torque) was ignored.
		1	The target value will be used as the input to the (position, speed, or torque) control loop.
13	Following error	0	There is no following error (always 0 in Cyclic Velocity or Torque Mode).
		1	A following error occurred.

◆ Bits 10, 12, and 13: Interpolated Position Mode

Bit	State	Value	Description
10	Target reached	0	Halt (bit 8 in Controlword) = 0: The target position has not been reached. Halt (bit 8 in Controlword) = 1: The axis is decelerating.
		1	Halt (bit 8 in Controlword) = 0: The target position was reached. Halt (bit 8 in Controlword) = 1: The axis is stopped.
12	Ip mode active	0	Interpolation is disabled.
		1	Interpolation is enabled.
13	–	0	Reserved.

◆ Bits 10, 12, and 13: Profile Velocity Mode

Bit	State	Value	Description
10	Target reached	0	Halt (bit 8 in Controlword) = 0: The target position has not been reached. Halt (bit 8 in Controlword) = 1: The axis is decelerating.
		1	Halt (bit 8 in Controlword) = 0: The target position was reached. Halt (bit 8 in Controlword) = 1: The axis is stopped.
12	Speed	0	The speed is equal to or exceeds the Rotation Detection Level (Pn502 (2502h)).
		1	The speed is below the Rotation Detection Level (Pn502 (2502h)).
13	–	0	Reserved.

◆ Bits 10, 12, and 13: Profile Torque Mode

Bit	State	Value	Description
10	Target reached	0	Halt (bit 8 in Controlword) = 0: The target position has not been reached. Halt (bit 8 in Controlword) = 1: The axis is decelerating.
		1	Halt (bit 8 in Controlword) = 0: The target position was reached. Halt (bit 8 in Controlword) = 1: The axis is stopped.
12	–	0	Reserved.
13	–	0	Reserved.

15.6.4 Quick Stop Option Code (605Ah)

This object determines what operation will be performed if a Quick Stop is executed.

Index	Subindex	Name	Data Type	Access	PDO Mapping	Value	Saving to EEPROM
605Ah	0	Quick Stop Option Code	INT	RW	No	0 to 4 (default: 2)	Yes

(1) Data Description

Value	Description
0	Disables the servo drive (moves to the Switch ON Disabled state).
1	Decelerates at the deceleration rate for decelerating to a stop and moves to the Switch ON Disabled state. *1, *2
2	Decelerates at the deceleration rate for a quick stop and moves to the Switch ON Disabled state. *1, *3
3	Decelerates at the torque limit and moves to the Switch ON Disabled state. *1

*1 The motor is always stopped according to option code 0 (servo OFF stop) in Profile Torque Mode or Cyclic Torque Mode.
*2 The deceleration rate for decelerating to a stop is defined in the following objects.

- Profile Position/Interpolated Position/Cyclic Position/Cyclic Velocity Mode (6084h)
- Homing Mode (609Ah)

*3 Quick Stop Deceleration (6085h) is the deceleration rate for a quick stop.

15.6.5 Shutdown Option Code (605Bh)

This object defines the operation that is performed if there is a move from Operation Enable state to Ready to Switch ON state.

Index	Subindex	Name	Data Type	Access	PDO Mapping	Value	Saving to EEPROM
605Bh	0	Shutdown Option Code	INT	RW	No	0 to 1 (default: 0)	Yes

(1) Data Description

Value	Description
0	Disables the servo drive.
1	Decelerates at the deceleration rate for decelerating to a stop and moves to the Switch ON Disabled state. *1, *2

*1 The motor is always stopped according to option code 0 (servo OFF stop) in Profile Torque Mode or Cyclic Torque Mode.
*2 The deceleration rate for decelerating to a stop is defined in the following objects.

- Profile Position/Interpolated Position/Cyclic Position/Cyclic Velocity Mode (6084h)
- Homing Mode (609Ah)

15.6.6 Disable Operation Option Code (605Ch)

This object defines the operation that is performed if there is a move from Operation Enable state to Switched ON state.

Index	Subindex	Name	Data Type	Access	PDO Mapping	Value	Saving to EEPROM
605Ch	0	Disable Operation Option Code	INT	RW	No	0 to 1 (default: 1)	Yes

(1) Data Description

Value	Description
0	Disables the servo drive.
1	Decelerates at the deceleration rate for decelerating to a stop and moves to the Switch ON Disabled state. *1, *2

*1 The motor is always stopped according to option code 0 (servo OFF stop) in Profile Torque Mode or Cyclic Torque Mode.
*2 The deceleration rate for decelerating to a stop is defined in the following objects.

- Profile Position/Interpolated Position/Cyclic Position/Cyclic Velocity Mode (6084h)
- Homing Mode (609Ah)

15.6.7 Halt Option Code (605Dh)

This object defines the operation that is performed if bit 8 (Halt) in Controlword is active.

Index	Subindex	Name	Data Type	Access	PDO Mapping	Value	Saving to EEPROM
605Dh	0	Halt Option Code	INT	RW	No	-3 to 3 (default: 1)	Yes

(1) Data Description

Value	Description
-3	Decelerates at the torque limit and moves to the Operation Enabled state. Zero clamped when the speed becomes "motor stop judgment speed [min^{-1}]" or slower after stopped by Halt.
-2	Decelerates at the deceleration rate for a quick stop and moves to the Operation Enabled state. *1, *2 Zero clamped when the speed becomes "motor stop judgment speed [min^{-1}]" or slower after stopped by Halt.
-1	Decelerates at the deceleration rate for decelerating to a stop and moves to the Operation Enabled state. *1, *3 Zero clamped when the speed becomes "motor stop judgment speed [min^{-1}]" or slower after stopped by Halt.
0	Reserved.
1	Decelerates at the deceleration rate for decelerating to a stop and moves to the Operation Enabled state. *1, *3
2	Decelerates at the deceleration rate for a quick stop and moves to the Operation Enabled state. *1, *2
3	Decelerates at the torque limit and moves to the Operation Enabled state.

*1 If bit 8 (Halt) is 1 in Profile Torque Mode or Cyclic Torque Mode, the torque reference value is reduced to zero.
*2 Quick Stop Deceleration (6085h) is the deceleration rate for a quick stop.
*3 The deceleration rate for decelerating to a stop is defined in the following objects.

- Profile Position/Interpolated Position/Cyclic Position/Cyclic Velocity Mode (6084h)
- Homing Mode (609Ah)

15.6.8 Fault Reaction Option Code (605Eh)

This object defines the operation that is performed when an alarm is detected in the servo drive system.

Index	Subindex	Name	Data Type	Access	PDO Mapping	Value	Saving to EEPROM
605Eh	0	Fault Reaction Option Code	INT	RW	No	0 to 0 (default: 0)	Yes

(1) Data Description

Value	Description
0	Disables the servo drive. (Turns OFF the servo.)

15.6.9 Modes of Operation (6060h)

This object is used to select the operation mode. The servo drive gives the actual operation mode in the Modes of Operation Display object.

Index	Subindex	Name	Data Type	Access	PDO Mapping	Value	Saving to EEPROM
6060h	0	Modes of Operation	SINT	RW	Yes	0 to 10 (default: 0)	Yes

(1) Data Description

Value	Description
0	There is no mode change or no mode assigned.
1	Profile Position Mode
2	Reserved (continue previous mode).
3	Profile Velocity Mode
4	Torque Profile Mode
6	Homing Mode
7	Interpolated Position Mode
8	Cyclic Sync Position Mode
9	Cyclic Sync Velocity Mode
10	Cyclic Sync Torque Mode
Others	Reserved (continue previous mode).

15.6.10 Modes of Operation Display (6061h)

This object gives the current mode of operation.

The values that are returned are the same as the object codes for Modes of Operation (6060h).

Index	Subindex	Name	Data Type	Access	PDO Mapping	Value	Saving to EEPROM
6061h	0	Modes of Operation Display	SINT	RO	Yes	0	No

15.6.11 Supported Drive Modes (6502h)

This object gives the operation modes that are supported by the device.

Index	Subindex	Name	Data Type	Access	PDO Mapping	Value	Saving to EEPROM
6502h	0	Supported Drive Modes	UDINT	RO	No	0x03ED	No

(1) Data Description

Bit	Description	Definition
0	Pp (Profile position mode)	1: Supported.
1	Vl (Velocity mode)	0: Not supported.
2	Pv (Profile velocity mode)	1: Supported.
3	Tq (Torque profile mode)	1: Supported.
4	Reserved.	0
5	Hm (Homing mode)	1: Supported.
6	Ip (Interpolated position mode)	1: Supported.
7	Csp (Cyclic sync position mode)	1: Supported.
8	Csv (Cyclic sync velocity mode)	1: Supported.
9	Cst (Cyclic sync torque mode)	1: Supported.
10 to 31	Reserved.	0

15.7 Profile Position Mode

15.7.1 Target Position (607Ah)

This object contains the target position for the Profile Position Mode or Cyclic Synchronous Position Mode.

In Profile Position Mode, the value of this object is interpreted as either an absolute or relative value depending on the Abs/Rel Flag in Controlword. In Cyclic Synchronous Position Mode, the value is always interpreted as an absolute value.

Index	Subindex	Name	Data Type	Access	PDO Mapping	Value	Saving to EEPROM
607Ah	0	Target Position	DINT	RW	Yes	-2147483648 to 2147483647 (default: 0) [Pos. unit]	No

15.7.2 Software Position Limit (607Dh)

This object defines the absolute positions of the limits to the target position (Position Demand Value). Every target position is checked against these limits.

The limit positions are specified in user-defined position reference units, the same as for target positions. In the same manner as Position Demand Value (6062h) and other objects, set this object with a value to which Home Offset (607Ch) was added.

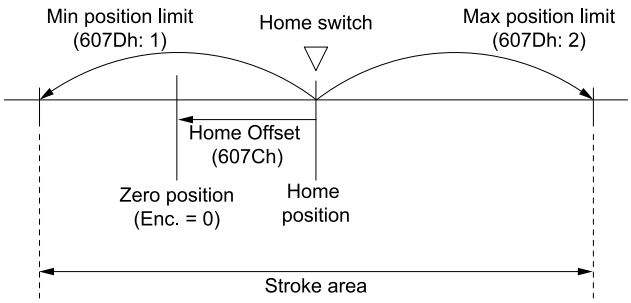

The software position limits are enabled at the following times:

- When homing is completed
- When an absolute encoder is connected

The software limits are disabled if they are set as follows:

- Min position limit ≥ Max position limit

Index	Subindex	Name	Data Type	Access	PDO Mapping	Value	Saving to EEPROM
607Dh	0	Number of entries	USINT	RO	No	2	No
	1	Min position limit	DINT	RW	No	-1073741823 to 1073741823 (default: 0) [Pos. unit]	Yes
	2	Max position limit	DINT	RW	No	-1073741823 to 1073741823 (default: 0) [Pos. unit]	Yes

15.7.3 Max Profile Velocity (607Fh)

This object contains the maximum speed during a Profile Mode operation.

Index	Subindex	Name	Data Type	Access	PDO Mapping	Value	Saving to EEPROM
607Fh	0	Max Profile Velocity	UDINT	RW	Yes	0 to 4294967295 (default: 2147483647) [Vel. unit]	Yes

15.7.4 Profile Velocity (6081h)

This object contains the final feed speed at the end of acceleration for a Profile Mode operation.

Index	Subindex	Name	Data Type	Access	PDO Mapping	Value	Saving to EEPROM
6081h	0	Profile Velocity	UDINT	RW	Yes	0 to 4294967295 (default: 0) [Vel. unit]	Yes

15.7.5 Profile Acceleration (6083h)

This object specifies the acceleration rate for Profile Mode operations.

Index	Subindex	Name	Data Type	Access	PDO Mapping	Value	Saving to EEPROM
6083h	0	Profile Acceleration	UDINT	RW	Yes	0 to 4294967295 (default: 1000) [Acc. unit]	Yes

15.7.6 Profile Deceleration (6084h)

This object specifies the deceleration rate for Profile Mode operations.

Index	Subindex	Name	Data Type	Access	PDO Mapping	Value	Saving to EEPROM
6084h	0	Profile Deceleration	UDINT	RW	Yes	0 to 4294967295 (default: 1000) [Acc. unit]	Yes

15.7.7 Quick Stop Deceleration (6085h)

This object contains the deceleration rate that is used to stop the motor if the Quick Stop Option Code (605Ah) is set to 2 and the Quick Stop command is given.

Index	Subindex	Name	Data Type	Access	PDO Mapping	Value	Saving to EEPROM
6085h	0	Quick Stop Deceleration	UDINT	RW	Yes	0 to 4294967295 (default: 1000) [Acc. unit]	Yes

15.8 Homing Mode

15.8.1 Home Offset (607Ch)

This object contains the offset between the zero position for the application and the machine home position (found during homing).

Index	Subindex	Name	Data Type	Access	PDO Mapping	Value	Saving to EEPROM
607Ch	–	Home Offset	DINT	RW	No	-536870912 to 536870911 (default: 0) [Pos. unit]	Yes

- Incremental Encoder
  The machine home position is found during homing. After homing is completed, the zero position is offset from the home position by adding the Home Offset (607Ch) to the home position.

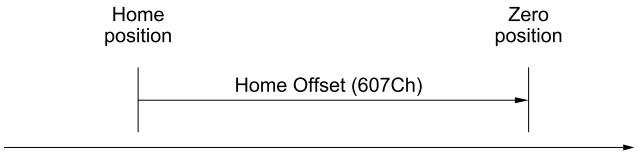

- Absolute Encoder
  If an absolute encoder is connected to the SERVOPACK, the zero position is offset from the home position by adding the values of Home Offset (607Ch) and Absolute Encoder Origin Offset (27E4h) when the power to the SERVOPACK is turned ON.

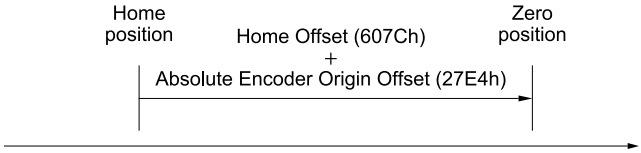

15.8.2 Homing Method (6098h)

This object specifies the homing method. Refer to the following section for details on the operations that are performed.

☞ *14.4 Homing on page 609*

Index	Subindex	Name	Data Type	Access	PDO Mapping	Value	Saving to EEPROM
6098h	0	Homing Method	SINT	RW	Yes	0 to 37 (default: 37)	No

(1) Data Description

Value (Method)	Description
0	Homing is disabled.
1 *1	Homing with the reverse limit switch and index pulse
2 *1	Homing with the forward limit switch and index pulse
7 to 14 *1	Homing with the home switch and index pulse
24 *1	Homing with the home switch
28 *1	Homing with the home switch
33, 34	Homing with the index pulse
35, 37	Homing with the current position

*1 If the overtravel alarm is enabled, homing using a limit switch cannot be performed.

15.8.3 Homing Speeds (6099h)

This object defines the speeds that are used during homing. The speeds are given in user speed reference units.

Index	Subindex	Name	Data Type	Access	PDO Mapping	Value	Saving to EEPROM
6099h	0	Number of entries	USINT	RO	No	2	No
	1	Speed during search for switch	UDINT	RW	Yes	0 to 4294967295 (default: 500000) [Vel. unit]	Yes
	2	Speed during search for zero	UDINT	RW	Yes	0 to 4294967295 (default: 100000) [Vel. unit]	Yes

15.8.4 Homing Acceleration (609Ah)

This object defines the acceleration that is used during homing. The rate is given in user acceleration reference units.

Index	Subindex	Name	Data Type	Access	PDO Mapping	Value	Saving to EEPROM
609Ah	0	Homing Acceleration	UDINT	RW	Yes	0 to 4294967295 (default: 1000) [Acc. unit]	Yes

15.9 Position Control Function

15.9.1 Position Demand Value (6062h)

This object specifies the current reference position in user position reference units.

Index	Subindex	Name	Data Type	Access	PDO Mapping	Value	Saving to EEPROM
6062h	0	Position Demand Value	DINT	RO	Yes	– [Pos. unit]	No

15.9.2 Position Actual Internal Value (6063h)

This object gives the current feedback position in encoder pulse units.

Index	Subindex	Name	Data Type	Access	PDO Mapping	Value	Saving to EEPROM
6063h	0	Position Actual Internal Value	DINT	RO	Yes	– [Inc]	No

15.9.3 Position Actual Value (6064h)

This object gives the current feedback position in user position reference units.

Index	Subindex	Name	Data Type	Access	PDO Mapping	Value	Saving to EEPROM
6064h	0	Position Actual Value	DINT	RO	Yes	– [Pos. unit]	No

15.9.4 Position Demand Internal Value (60FCh)

This object gives the output of the trajectory generator during position control (the position that is input to the position loop). The value is given in encoder pulses.

Index	Subindex	Name	Data Type	Access	PDO Mapping	Value	Saving to EEPROM
60FCh	0	Position Demand Internal Value	DINT	RO	Yes	– [Inc]	No

15.9.5 Following Error Window (6065h)

This object defines the detection range for the following error (bit 13 of Statusword).

If the position deviation exceeds the Following Error Window for the Following Error Time Out (6066h), bit 13 in Statusword changes to 1 to indicate following error. A following error can occur when the servo drive is blocked, when the profile speed is too high, or when the gain settings are not correct.

Index	Subindex	Name	Data Type	Access	PDO Mapping	Value	Saving to EEPROM
6065h	0	Following Error Window	UDINT	RW	No	0 to 1073741823 (default: 5242880) [Pos. unit]	Yes

15.9.6 Following Error Time Out (6066h)

If the position deviation exceeds the Following Error Window for the time specified in this object, bit 13 in Statusword changes to 1 to indicate following error.

Index	Subindex	Name	Data Type	Access	PDO Mapping	Value	Saving to EEPROM
6066h	0	Following Error Time Out	UINT	RW	No	0 to 65535 (default: 0) [ms]	Yes

15.9.7 Following Error Actual Value (60F4h)

This object provides the current position deviation.

Index	Subindex	Name	Data Type	Access	PDO Mapping	Value	Saving to EEPROM
60F4h	0	Following Error Actual Value	DINT	RO	Yes	– [Pos. unit]	No

15.9.8 Position Window (6067h)

This object defines the positioning completed width for the target position. When the servo drive has completed outputting the reference to the target position and the time specified in Position Window Time (6068h) has passed after the distance between the target position and the position actual value is within the value of this object, bit 10 (target reached) in Statusword changes to 1.

Index	Subindex	Name	Data Type	Access	PDO Mapping	Value	Saving to EEPROM
6067h	0	Position Window	UDINT	RW	No	0 to 1073741823 (default: 30) [Pos. unit]	Yes

15.9.9 Position Window Time (6068h)

When the servo drive has completed outputting the reference to the target position and the time specified in this object has passed after the distance between the target position and the position actual value is within the Position Window (6067h), bit 10 (target reached) in Statusword changes to 1.

Index	Subindex	Name	Data Type	Access	PDO Mapping	Value	Saving to EEPROM
6068h	0	Position Window Time	UINT	RW	No	0 to 65535 (default: 0) [ms]	Yes

15.9.10 Position Offset (60B0h)

This object defines the offset value of the target position. The position offset is added to the target position when the object is written.

Index	Subindex	Name	Data Type	Access	PDO Mapping	Value	Saving to EEPROM
60B0h	0	Position Offset	DINT	RW	Yes	-2147483648 to 2147483647 (default: 0) [Pos. Unit]	No

15.9.11 Additional Position Actual Value (60E4h)

This object specifies the external encoder position in user position reference units.

Index	Subindex	Name	Data Type	Access	PDO Mapping	Value	Saving to EEPROM
60E4h	0	Number of entries	USINT	RO	No	1	No
	1	External encoder position	DINT	RO	Yes	0 [inc]	Yes

15.9.12 Position Range Limit (607Bh)

This object specifies the first and last rotational coordinates.

Index	Subindex	Name	Data Type	Access	PDO Mapping	Value	Saving to EEPROM
607Bh	0	Number of entries	USINT	RO	No	2	No
	1	Min position range limit	DINT	RW	Yes	-2147483648 to 0 (default: 0) [Pos. unit]	Yes
	2	Max position range limit	DINT	RW	Yes	0 to 2147483647 (default: 0) [Pos. unit]	Yes

15.9.13 Position Option Code (60F2h)

This object specifies the movement method in the rotational coordinate system.

Index	Subindex	Name	Data Type	Access	PDO Mapping	Value	Saving to EEPROM
60F2h	0	Position option code	UINT	RW	Yes	0 to 0xFFFF (default: 0)	No

(1) Data Description

Bit	Value	Name	Description
0 to 5	0	–	Reserved.
6, 7	0	Normal (similar to linear axis)	Simple absolute position positioning
	1	Only negative direction	Positioning in the reverse direction
	2	Only negative direction	Positioning in the forward direction
	3	Optimized (shortest way)	Positioning in the shortest direction
8 to 15	0	–	Reserved.

15.10 Interpolated Position Mode

15.10.1 Interpolation Submode Select (60C0h) (Object Shared by Mode 1 and Mode 2)

This object is used to select the submode for the Interpolated Position Mode.
To use Interpolated Position Mode, set this object first.

Index	Subindex	Name	Data Type	Access	PDO Mapping	Value	Saving to EEPROM
60C0h	0	Interpolation Sub Mode Select	INT	RW	No	-3 to 0 (default: 0)	No

Information To use the position reference filter, also set Position Reference Filter (2775h).
Refer to the following section for information on Position Reference Filter (2775h).
☞ *6.19.2 Average Position Reference Movement Filter on page 305*

(1) Data Description

Value (Method)	Description	
0	Selects mode 1 with no position reference filter.	Interpolation Data Record (60C1h) is used as the interpolation position reference.
-1	Reserved.	–
-2	Selects mode 2 with no position reference filter.	Interpolation Data Record for 1st Profile (27C0h) and Interpolation Data Record for 2nd Profile (27C1h) are used as the interpolation position references.
-3	Reserved.	–

15.10.2 Interpolation Data Record (60C1h) (Object Shared by Mode 1 and Mode 2)

This object gives the interpolation position reference for Interpolated Position Mode.

Index	Subindex	Name	Data Type	Access	PDO Mapping	Value	Saving to EEPROM
60C1h	0	Number of entries	USINT	RO	No	1	No
	1	Interpolation data record	DINT	RW	Yes	-2147483648 to 2147483647 (default: 0) [Pos. unit]	No

15.10.3 Interpolation Time Period (60C2h) (Object Shared by Mode 1 and Mode 2)

This object defines the interpolated position reference cycle for Interpolation Mode.
If DC Sync0 Mode is selected, the interpolation time period is automatically stored as the Sync0 Cycle Time.
If DC Free-Run Mode is selected, set the object manually.

Index	Subindex	Name	Data Type	Access	PDO Mapping	Value	Saving to EEPROM
60C2h	0	Number of entries	USINT	RO	No	2	No
	1	Interpolation time period value	USINT	RW	No	1 to 250 (default: 125)	No
	2	Interpolation time index	SINT	RW	No	-6 to -3 (default: -6)	No

Interpolation time [s] = 60C2h:1 × 10^60C2h:2

Set the values of 60C2h:1 (Interpolation time period value) and 60C2h:2 (Interpolation time index) so that the interpolation time is 4 ms at maximum.

Note:

You can change this object only under the following conditions.

- If DC Sync0 Mode is selected: EtherCAT is in the Switch ON Disable state.
- If DC Free-Run Mode is selected: EtherCAT is in the Switch ON Disable state. Or, EtherCAT is in Interpolated Position Mode and Enable Interpolation equals 0.

15.11 Cyclic Synchronous Position Mode

15.11.1 Velocity Offset (60B1h)

In Cyclic Synchronous Position Mode, this object contains the speed feedforward value.

In Cyclic Synchronous Velocity Mode, this object contains the offset value to add to the speed reference.

Index	Subindex	Name	Data Type	Access	PDO Mapping	Value	Saving to EEPROM
60B1h	0	Velocity Offset	DINT	RW	Yes	-2147483648 to 2147483647 (default: 0) [Vel. unit]	No

15.11.2 Torque Offset (60B2h)

In Cyclic Synchronous Position Mode or Cyclic Synchronous Velocity Mode, this object contains the torque feedforward value.

In Cyclic Synchronous Torque Mode, this object contains the offset value to add to the torque reference.

Index	Subindex	Name	Data Type	Access	PDO Mapping	Value	Saving to EEPROM
60B2h	0	Torque Offset	INT	RW	Yes	-32768 to 32767 (default: 0) [Trq. unit]	No

15.12 Profile Velocity/Cyclic Synchronous Velocity Mode

15.12.1 Velocity Demand Value (606Bh)

This object contains the output value from the velocity trajectory generator or the output value from the position control function (i.e., the input reference for the speed loop).

Index	Subindex	Name	Data Type	Access	PDO Mapping	Value	Saving to EEPROM
606Bh	0	Velocity Demand Value	DINT	RO	Yes	– [Vel. unit]	No

15.12.2 Velocity Actual Value (606Ch)

This object contains the motor speed.

Index	Subindex	Name	Data Type	Access	PDO Mapping	Value	Saving to EEPROM
606Ch	0	Velocity Actual Value	DINT	RO	Yes	– [Vel. unit]	No

15.12.3 Velocity Window (606Dh)

This object sets the speed coincidence detection width.

When the time specified in Velocity Window Time (606Eh) has passed after the difference between the target speed (target velocity) and the velocity actual value is within the setting of the velocity window, bit 10 (target reached) in Statusword is set to 1.

Index	Subindex	Name	Data Type	Access	PDO Mapping	Value	Saving to EEPROM
606Dh	0	Velocity Window	UINT	RW	No	0 to 65535 (default: 20000) [Vel. unit]	Yes

15.12.4 Velocity Window Time (606Eh)

When the time specified in Velocity Window Time (606Eh) has passed after the difference between the target speed (target velocity) and the velocity actual value is within the setting of the velocity window, bit 10 (target reached) in Statusword is set to 1.

Index	Subindex	Name	Data Type	Access	PDO Mapping	Value	Saving to EEPROM
606Eh	0	Velocity Window Time	UINT	RW	No	0 to 65535 (default: 0) [ms]	Yes

15.12.5 End Velocity (6082h)

Set a value in End Velocity (6082h) to continue operation at that set speed without stopping when the target position is reached.

Index	Subindex	Name	Data Type	Access	PDO Mapping	Value	Saving to EEPROM
6082h	0	End Velocity	UDINT	RW	Yes	0 to 4294967295 (default: 0) [Vel. unit]	No

15.12.6 Target Velocity (60FFh)

This object specifies the target speed for Profile Velocity Mode or Cyclic Synchronous Velocity Mode in user defined speed reference units.

Index	Subindex	Name	Data Type	Access	PDO Mapping	Value	Saving to EEPROM
60FFh	0	Target Velocity	DINT	RW	Yes	-2147483648 to 2147483647 (default: 0) [Vel. unit]	No

15.13 Profile Torque/Cyclic Synchronous Torque Mode

15.13.1 Target Torque (6071h)

This object specifies the input torque reference value for Torque Control Mode. The unit is the user-defined torque reference unit.

Index	Subindex	Name	Data Type	Access	PDO Mapping	Value	Saving to EEPROM
6071h	0	Target Torque	INT	RW	Yes	-32768 to 32767 (default: 0) [Trq. unit]	No

15.13.2 Torque Demand Value (6074h)

This object gives the currently output torque reference value. The unit is the user-defined torque reference unit.

Index	Subindex	Name	Data Type	Access	PDO Mapping	Value	Saving to EEPROM
6074h	0	Torque Demand Value	INT	RO	Yes	– [Trq. unit]	No

15.13.3 Torque Slope (6087h)

This object sets the torque output slope to use in Profile Torque Mode. Set the value as the rate of change per second in user-defined torque reference units.

Index	Subindex	Name	Data Type	Access	PDO Mapping	Value	Saving to EEPROM
6087h	0	Torque Slope	UDINT	RW	Yes	0 to 4294967295 (default: 1000) [Trq. unit/s]	Yes

15.13.4 Motor Rated Torque (6076h)

This object gives the motor rated torque (rated force for a linear servomotor). The value is given in mN·m for a rotary servomotor, and in mN for a linear servomotor.

Index	Subindex	Name	Data Type	Access	PDO Mapping	Value	Saving to EEPROM
6076h	0	Motor Rated Torque	UDINT	RO	No	– [mN·m, mN]	No

15.13.5 Torque Actual Value (6077h)

For a SERVOPACK, this object contains the same value as the torque reference output value.

Index	Subindex	Name	Data Type	Access	PDO Mapping	Value	Saving to EEPROM
6077h	0	Torque Actual Value	INT	RO	Yes	– [Trq. unit]	No

15.13.6 Current Actual Value (6078h)

This object contains the current value of electrical current.

Index	Subindex	Name	Data Type	Access	PDO Mapping	Value	Saving to EEPROM
6078h	0	Current Actual Value	INT	RO	Yes	– [1/1000 of rated current]	No

15.14 Torque Limit Function

15.14.1 Max. Torque (6072h)

This object sets the maximum output torque for the motor. The unit is the user-defined torque reference unit.

The maximum motor torque is automatically set in this object in units of 0.1% of the motor rated torque when the power is turned ON.

Index	Subindex	Name	Data Type	Access	PDO Mapping	Value	Saving to EEPROM
6072h	0	Max Torque	UINT	RW	Yes	0 to 65535 (default: Motor max torque) [Trq. unit]	No

15.14.2 Positive Torque Limit Value (60E0h)

This object sets the forward torque limit. The unit is the user-defined torque reference unit.

Index	Subindex	Name	Data Type	Access	PDO Mapping	Value	Saving to EEPROM
60E0h	0	Positive Torque Limit Value	UINT	RW	Yes	0 to 65535 (default: 8000) [Trq. unit]	Yes

15.14.3 Negative Torque Limit Value (60E1h)

This object sets the reverse torque limit The unit is the user-defined torque reference unit.

Index	Subindex	Name	Data Type	Access	PDO Mapping	Value	Saving to EEPROM
60E1h	0	Negative Torque Limit Value	UINT	RW	Yes	0 to 65535 (default: 8000) [Trq. unit]	Yes

15.15 Touch Probe Function

15.15.1 Touch Probe Function (60B8h)

This object sets the touch probes.

Index	Subindex	Name	Data Type	Access	PDO Mapping	Value	Saving to EEPROM
60B8h	0	Touch probe function	UINT	RW	Yes	0 to 0xFFFF (default: 0)	No

(1) Data Description

Bit	Value	Description
0	0	Disables touch probe 1.
	1	Enables touch probe 1.
1	0	Single Trigger Mode (Latches the position at the first trigger event.)
	1	Continuous Trigger Mode (Latches the position every trigger event.)
2	0	Triggers on probe 1 input (SERVOPACK CN1/Probe 1 (SI4) signal).
	1	Triggers on encoder zero signal (phase C).
3	–	Reserved.
4	0	Stops sampling of touch probe 1 at the rising edge.
	1	Starts sampling of touch probe 1 at the rising edge.
5	0	Stops sampling of touch probe 1 at the falling edge.
	1	Starts sampling of touch probe 1 at the falling edge.
6	0	Latches Position Actual Value (6064h) at touch probe 1.
	1	Latches external encoder position at touch probe 1.
7	–	Reserved.
8	0	Disables touch probe 2.
	1	Enables touch probe 2.
9	0	Single Trigger Mode (Latches the position at the first trigger event.)
	1	Continuous Trigger Mode (Latches the position every trigger event.)
10	0	Triggers on probe 2 input (SERVOPACK CN1/Probe 2 (SI5) signal).
	1	Triggers on encoder zero signal (phase C).
11	–	Reserved.
12	0	Stops sampling of touch probe 2 at the rising edge.
	1	Starts sampling of touch probe 2 at the rising edge.
13	0	Stops sampling of touch probe 2 at the falling edge.
	1	Starts sampling of touch probe 2 at the falling edge.
14, 15	–	Reserved.

Note:

- Bits 0 to 7: For touch probe 1
  Bits 8 to 15: For touch probe 2
- Touch probe 1 cannot be used during execution of homing. If touch probe 1 was already enabled, it will be disabled when homing is started.
- If bit 1 is set to 1 (i.e., if Continuous Trigger Mode is set), the setting of bit 2 (Trigger Selection Signal) will be read each time the latch is started. To continuously latch with the same trigger signal, do not change the status of bit 2.
- Bit 6 = 1 can be used only when the external encoder monitor is enabled. It cannot be used when the external encoder monitor is disabled.

15.15.2 Touch Probe Status (60B9h)

This object gives the status of the touch probes.

Index	Subindex	Name	Data Type	Access	PDO Mapping	Value	Saving to EEPROM
60B9h	0	Touch Probe Status	UINT	RO	Yes	–	No

(1) Data Description

Bit	Value	Description
0	0	Touch probe 1 is disabled.
	1	Touch probe 1 is enabled.
1	0	No latched position is stored for touch probe 1.
	1	A latched position is stored for the rising edge of touch probe 1.
2	0	No latched position is stored for touch probe 1.
	1	A latched position is stored for the falling edge of touch probe 1.
3 to 5	–	Reserved.
6	0, 1	Saving the latched position for Continuous Trigger Mode for the falling edge of touch probe 1 was completed. *1(Status toggles every time a position is latched.)
7	0, 1	Saving the latched position for Continuous Trigger Mode for the rising edge of touch probe 1 was completed. *1(Status toggles every time a position is latched.)
8	0	Touch probe 2 is disabled.
	1	Touch probe 2 is enabled.
9	0	No latched position is stored for touch probe 2.
	1	A latched position is stored for the rising edge of touch probe 2.
10	0	No latched position is stored for touch probe 2.
	1	A latched position is stored for the falling edge of touch probe 2.
11 to 13	–	Reserved.
14	0, 1	Saving the latched position for Continuous Trigger Mode for the falling edge of touch probe 2 was completed. *1(Status toggles every time a position is latched.)
15	0, 1	Saving the latched position for Continuous Trigger Mode for the rising edge of touch probe 2 was completed. *1(Status toggles every time a position is latched.)

*1 If the continuous latch is enabled (Touch Probe Function (60B8h) bit 1 = 1 or bit 9 = 1), bit 7 or bit 15 of Touch Probe Status (60B9h) is toggled every time the latched position is updated.

15.15.3 Touch Probe 1 Positive Edge (60BAh)

This object gives the latched position saved at the rising edge of touch probe 1. The value is given in user position units (Pos. unit).

Index	Subindex	Name	Data Type	Access	PDO Mapping	Value	Saving to EEPROM
60BAh	0	Touch probe 1 positive edge	DINT	RO	Yes	– [Pos. unit]	No

15.15.4 Touch Probe 1 Negative Edge (60BBh)

This object gives the latched position saved at the falling edge of touch probe 1. The value is given in user position units (Pos. unit).

Index	Subindex	Name	Data Type	Access	PDO Mapping	Value	Saving to EEPROM
60BBh	0	Touch probe 1 negative edge	DINT	RO	Yes	– [Pos. unit]	No

15.15.5 Touch Probe 2 Positive Edge (60BCh)

This object gives the latched position saved at the rising edge of touch probe 2. The value is given in user position units (Pos. unit).

Index	Subindex	Name	Data Type	Access	PDO Mapping	Value	Saving to EEPROM
60BCh	0	Touch probe 2 positive edge	DINT	RO	Yes	– [Pos. unit]	No

15.15.6 Touch Probe 2 Negative Edge (60BDh)

This object gives the latched position saved at the falling edge of touch probe 2. The value is given in user position units (Pos. unit).

Index	Subindex	Name	Data Type	Access	PDO Mapping	Value	Saving to EEPROM
60BDh	0	Touch probe 2 negative edge	DINT	RO	Yes	– [Pos. unit]	No

15.16 Digital Inputs/Outputs

15.16.1 Digital Inputs (60FDh)

This object gives the status of the digital inputs to CN1 on the SERVOPACK.

Index	Subindex	Name	Data Type	Access	PDO Mapping	Value	Saving to EEPROM
60FDh	0	Digital Inputs	UDINT	RO	Yes	–	No

(1) Data Description

Bit	Signal	Description
0	N-OT: Reverse limit switch	0: OFF, 1: ON
1	P-OT: Forward limit switch	
2	/Home: Home switch	
3 to 15	–	Reserved.
16	SI0	1: OFF (open), 1: ON (closed)
17	SI1	
18	SI2	
19	SI3	
20	SI4	
21	SI5	
22	SI6	
23	–	Reserved.
24	HWBB1	Hardwired base block signal input 1 (0: open, 1: closed)
25	HWBB2	Hardwired base block signal input 2 (0: open, 1: closed)
26 to 31	–	Reserved.

15.16.2 Digital Outputs (60FEh)

This object controls the status of the brake control output signal (/BK) and the general-purpose output signals (SO1 to SO3) from CN1 on the SERVOPACK.

Subindex 1 is used to control the status of the output signals. Subindex 2 determines which output signals in subindex 1 are enabled.

ON/OFF with this object is output by logical OR with the output assigned with the objects 250Eh, 250Fh, 2510h, 2512h, 2514h, 25B0h to 25B8h, and 25BCh. If any of these signals (SO1 to SO3) are assigned with objects 250Eh, 250Fh, 2510h, 2512h, 2514h, 25B0h to 25B8h, or 25BCh, disable the corresponding signals with the Bit Masks in subindex 2 so that the signals are not duplicated.

Signal control with these objects is enabled on when the EtherCAT state machine is OPERATIONAL. If the EtherCAT state machine is not OPERATIONAL, the status is the following:

- /BK signal: The object setting is ignored and the brake cannot be released with the object.
- SO1 to SO3 signals: These signals are output according to the settings specified for the output status when a host communications error occurs (objects 255Ch and 255Dh).

Index	Subindex	Name	Data Type	Access	PDO Mapping	Value	Saving to EEPROM
60FEh	0	Number of entries	USINT	RO	No	2	No
	1	Physical outputs	UDINT	RW	Yes	0 to 0xFFFFFFFF (default: 0)	Yes
	2	Bit mask	UDINT	RW	No	0 to 0xFFFFFFFF (default: 0x000C0000)	Yes

Important

To use /BK signal control with this object, you must have accurate knowledge of the status of the object at all times.

If the brake is released with the object when the servomotor is powered, that state will not be applied to operation at that time. However, /BK signal control with this object is always enabled as long as there are no alarms, so even is the servo is turned OFF, the brake remains released, resulting in extreme danger.

(1) Data Description of Physical Outputs

Bit	Signal	Description
0	/BK	0: Operate brake, 1: Release brake
1 to 16	–	Reserved.
17	SO1	0: OFF, 1: ON
18	SO2	
19	SO3	
20 to 31	–	Reserved.

(2) Data Description of Bit Masks

Bit	Signal	Description
0	/BK	0: Disables physical output. 1: Enables physical output.
1 to 16	–	Reserved.
17	SO1	0: Disables physical output. 1: Enables physical output.
18	SO2	
19	SO3	
20 to 31	–	Reserved.

15.17 Motor Catalogue Number (6403h)

This object contains the model number of the connected servomotor.

Index	Subindex	Name	Data Type	Access	PDO Mapping	Value	Saving to EEPROM
6403h	0	Motor Catalogue Number	STRING	RO	No	–	No

15.18 Manufacturer Serial Number (F9F0h)

This object contains the SERVOPACK serial number.

Index	Subindex	Name	Data Type	Access	PDO Mapping	Value	Saving to EEPROM
F9F0h	0	Manufacturer Serial Number	STRING	RO	No	–	No

16

Maintenance

This chapter provides information on the meaning of, causes of, and corrections for alarms and warnings.
In this chapter, the object index number (2□□□h) for EtherCAT communications is given after the SERVOPACK parameter number (Pn□□□).

16.1 Inspections and Part Replacement 695

16.1.1 Inspections 695

16.1.2 Guidelines for Part Replacement 695

16.1.3 Replacing the Battery 695

16.2 Alarm Displays 698

16.2.1 List of Alarms 698

16.2.2 Troubleshooting Alarms 703

16.2.3 Alarm Reset 730

16.2.4 Displaying the Alarm History 731

16.2.5 Clearing the Alarm History 732

16.2.6 Resetting Option Module Configuration Error 733

16.2.7 Resetting Motor Type Alarms 735

16.3 Warning Displays 737

16.3.1 Warnings Table 737

16.3.2 Troubleshooting Warnings 738

16.4 Troubleshooting Based on the Operation and Conditions of the Servomotor 744

16.4.1 Servomotor Does Not Start 744

16.4.2 Servomotor Moves Instantaneously, and Then Stops 745

16.4.3 Servomotor Speed Is Unstable 745

16.4.4 Servomotor Moves without a Reference Input 746

16.4.5 Dynamic Brake Does Not Operate 746

16.4.6 Abnormal Noise from Servomotor 746

16.4.7 Servomotor Vibrates at Frequency of Approx. 200 to 400 Hz. 748

16.4.8 Large Motor Speed on Starting and Stopping 748

16.4.9 Absolute Encoder Position Deviation Error (The position that was saved in the host controller when the power was turned OFF is different from the position when the power was next turned ON.) 749

16.4.10 Overtravel Occurred 750

16.4.11 Improper Stop Position for Overtravel (OT) Signal 750
16.4.12 Position Deviation (without Alarm) 751
16.4.13 Servomotor Overheated 752

16.1 Inspections and Part Replacement

This section describes inspections and part replacement for SERVOPACKs.

16.1.1 Inspections

Perform the inspections given in the following table at least once every year for the SERVOPACK. Daily inspections are not required.

Item	Frequency	Inspection	Correction
Exterior	At least once a year	Check for dust, dirt, and oil on the surfaces.	Clean with pressurized air or a cloth.
Loose Screws		Check for loose terminal block and connector mounting screws and for other loose parts.	Tighten any loose screws or other loose parts.

We recommend that you perform periodic inspections of the Safety Functions in the SERVOPACK. For information on the periodic validation test, refer to the following section.

☞ *12.5 Validating Safety Functions on page 578*

16.1.2 Guidelines for Part Replacement

The following electric or electronic parts are subject to mechanical wear or deterioration over time. Use one of the following methods to check the standard replacement period.

- Use the service life prediction function of the SERVOPACK.
  Refer to the following section for information on service life predictions.
  ☞ *9.4 Monitoring Product Life on page 514*
- Use the following table.

Part	Standard Replacement Period	Remarks
Cooling Fan	4 years to 5 years	The standard replacement periods given on the left are for the following operating conditions. – Surrounding air temperature: Annual average of 30°C – Load factor: 80% max. – Operation rate: 20 hours/day max.
Electrolytic Capacitor	10 years	
Relays	100000 power ON operations	Power ON frequency: Once an hour
Battery	3 years without power supplied	Surrounding temperature without power supplied: 20°C

When any standard replacement period is close to expiring, contact your Yaskawa representative. After an examination of the part in question, we will determine whether the part should be replaced.

> **Important**
> The parameters of any SERVOPACKs that are sent to Yaskawa for part replacement are reset to the factory settings before they are returned to you. Always keep a record of the parameter settings. And, always confirm that the parameters are properly set before starting operation.

16.1.3 Replacing the Battery

If the battery voltage drops to approximately 2.7 V or less, an A.830 alarm (Encoder Battery Alarm) or an A.930 warning (Absolute Encoder Battery Error) will be displayed.

If this alarm or warning is displayed, the battery must be replaced. Refer to the following section for the battery replacement procedure.

☞ *(2) Battery Replacement Procedure on page 696*

(1) Battery Alarm/Warning Selection

Whether to display an alarm or a warning is determined by the setting of Pn008 (2008h) = n.□□□X (Low Battery Voltage Alarm/Warning Selection).

		Low Battery Voltage Alarm/Warning Selection Speed Pos Trq		When Enabled
Pn008 (2008h)	n.□□□X	0 Default	Output alarm (A.830) for low battery voltage.	After restart
		1	Output warning (A.930) for low battery voltage.	

- Pn008 (2008h) = n.□□□0
  The ALM (Servo Alarm Output) signal is output for up to 10 seconds when the control power is turned ON, and then the battery voltage is monitored for four seconds.
  No alarm will be displayed even if the battery voltage drops below the specified value after these four seconds.
- Pn008 (2008h) = n.□□□1
  The ALM (Servo Alarm Output) signal is output for up to 10 seconds when the control power is turned ON, and then the battery voltage is monitored continuously.

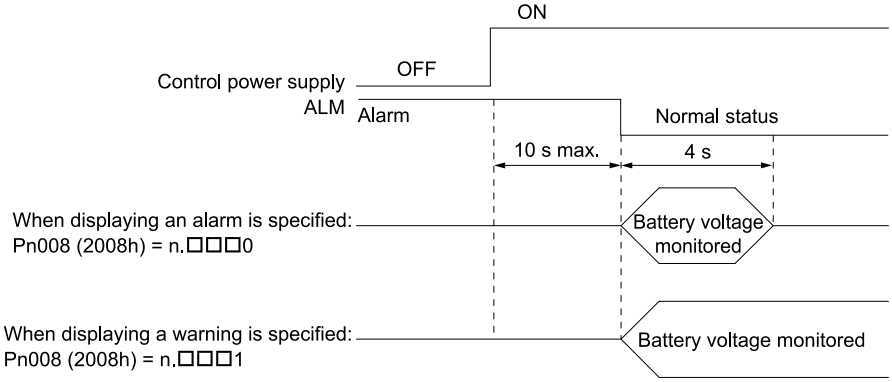

(2) Battery Replacement Procedure

(a) When Installing a Battery on the Host Controller

1. **Turn ON only the control power to the SERVOPACK.**
2. **Remove the old battery and mount a new battery.**
3. **Turn OFF the control power to the SERVOPACK to clear the A.830 alarm (Encoder Battery Alarm).**
4. **Turn ON the control power to the SERVOPACK again.**
5. **Make sure that the alarm has been cleared and that the SERVOPACK operates normally.**

(b) When Using an Encoder Cable with a Battery Unit

1. **Turn ON only the control power to the SERVOPACK.**

> Important
> If you remove the battery or disconnect the encoder cable while the control power to the SERVOPACK is OFF, the absolute encoder data will be lost.

2. **Open the cover of the battery unit.**

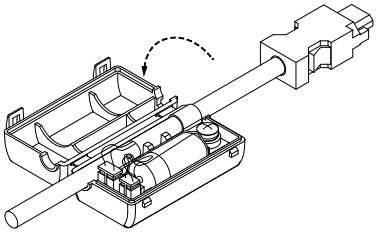

3. **Remove the old battery and mount a new battery.**

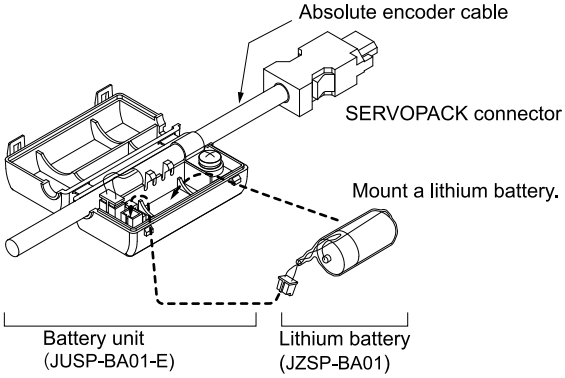

4. **Close the cover of the battery unit.**

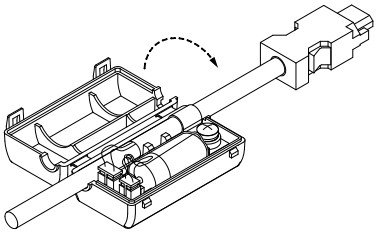

5. **Turn OFF the power to the SERVOPACK to clear the A.830 alarm (Encoder Battery Alarm).**
6. **Turn ON the power to the SERVOPACK.**
7. **Make sure that the alarm has been cleared and that the SERVOPACK operates normally.**

16.2 Alarm Displays

To check an alarm that occurs in the SERVOPACK, use one of the following methods. However, if no alarm number appears on the panel display, this indicates a SERVOPACK system error. Replace the SERVOPACK.

Panel display on SERVOPACK	If there is an alarm, the code will be displayed one character at a time, as shown below. Example: Alarm A.020 Status Display → Not lit. → A. → Not lit. → 0 → Not lit. → 2 → Not lit. → 0 → Not lit.
Digital operator	The alarm code will be displayed.
Statusword (6041h)	Bit 3 (fault) in the statusword will change to 1. (Bit 3 is 0 during normal operation.)
Error code (603Fh)	A current alarm code is stored in object 603Fh.
Emergency message	The controller is notified of any alarm that occurs. (Notification may not be possible if EtherCAT communications are unstable.)

This section provides a list of the alarms that may occur and the causes of and corrections for those alarms.

16.2.1 List of Alarms

The list of alarms gives the alarm name, alarm meaning, alarm stopping method, and alarm reset possibility in order of the alarm numbers.

(1) Servomotor Stopping Method for Alarms

Refer to the following section for information on the stopping method for alarms.

☞ *5.12.2 Servomotor Stopping Method for Alarms on page 205*

(2) Alarm Reset Possibility

Yes: You can use an alarm reset to clear the alarm. However, this assumes that the cause of the alarm has been removed.

No: You cannot clear the alarm.

(3) List of Alarms

The following table lists the alarms.

Note:

Alarms detected if you are connecting the advanced safety module to the SERVOPACK: A.047, A.048, A.E11 to A.E15, A.E1F, A.E28, A.E29, A.E2B, A.E35, A.E36, A.E3A to A.E3C, A.E3E, A.E78 to A.E7C, A.EB0, A.EB2, A.EB3, A.EB9, A.EC0, A.EC1, and A.EC3 to A.EC5. Refer to the following manual for details.

📖 Σ-X-Series AC Servo Drive Advanced Safety Module with Safety over EtherCAT (FSoE) Communications References Product Manual (Manual No.: SIEP C710812 25)

📖 Σ-X-Series AC Servo Drive Advanced Safety Module Digital I/O Product Manual (Manual No.: SIEP C710812 26)

Information
- The EtherCAT communications state moves to SAFEOP after alarm numbers A10h, A12h, or EA2h is detected.
- Alarm number E75h occurs when the SERVOPACK is equipped with the fully-closed option module.
- Alarm numbers FL-1 to FL-7 are not stored in the alarm history. They are only displayed on the panel display.

Alarm Number	Alarm Name	Alarm Meaning	Servomotor Stopping Method	Alarm Reset Possibility
020h	Parameter Checksum Error	There is an error in the parameter data in the SERVOPACK.	Gr.1	No
021h	Parameter Format Error	There is an error in the parameter data in the SERVOPACK.	Gr.1	No
022h	System Checksum Error	There is an error in the parameter data in the SERVOPACK.	Gr.1	No

Continued on next page.

Continued from previous page.

Alarm Number	Alarm Name	Alarm Meaning	Servomotor Stopping Method	Alarm Reset Possibility
024h	System Alarm	An internal program error occurred in the SERVOPACK.	Gr.1	No
025h	System Alarm	An internal program error occurred in the SERVOPACK.	Gr.1	No
030h	Main Circuit Detector Error	There is an error in the detection data for the main circuit.	Gr.1	Yes
040h	Parameter Setting Error	A parameter setting is outside of the setting range.	Gr.1	No
041h	Encoder Output Pulse Setting Error	The setting of Pn212 (2212h) (Number of Encoder Output Pulses) or Pn281 (2281h) (Encoder Output Resolution) is outside of the setting range or does not satisfy the setting conditions.	Gr.1	No
042h	Parameter Combination Error	The combination of some parameters exceeds the setting range.	Gr.1	No
044h	Semi-Closed/Fully-Closed Loop Control Parameter Setting Error	The settings of parameters related to semi-closed/fully-closed loop control do not match.	Gr.1	No
046h	SigmaLINK II Command/ Response Parameter Setting Error	An error was detected in the SigmaLINK II response data or SigmaLINK II command data settings.	Gr.1	No
047h	Encoder with Functional Safety - Safety Mode Setting Error	The SERVOPACK was connected to an encoder with functional safety.	Gr.1	Yes
050h	Combination Error	The capacities of the SERVOPACK and servomotor do not match.	Gr.1	Yes
051h	Unsupported Device Alarm	An unsupported device was connected.	Gr.1	No
070h	Motor Type Change Detected	The connected motor is a different type of motor from the previously connected motor.	Gr.1	No
080h	Linear Encoder Pitch Setting Error	The setting of Pn282 (2282h) (Linear Encoder Scale Pitch) has not been changed from the default setting.	Gr.1	No
100h	Overcurrent Detected	An overcurrent flowed through the power transistor or the heat sink overheated.	Gr.1	No
101h	Motor Overcurrent Detected	The current to the motor exceeded the allowable current.	Gr.1	No
102h	Motor Overcurrent Detected 2	The current to the motor exceeded the allowable current.	Gr.1	No
300h	Regeneration Error	There is an error related to regeneration.	Gr.1	Yes
320h	Regenerative Overload	A regenerative overload occurred.	Gr.2	Yes
330h	Main Circuit Power Supply Wiring Error	• The AC power supply input setting or DC power supply input setting is not correct. • The power supply wiring is not correct.	Gr.1	Yes
400h	Overvoltage	The main circuit DC voltage is too high.	Gr.1	Yes
410h	Undervoltage	The main circuit DC voltage is too low.	Gr.2	Yes
450h	Main-Circuit Capacitor Overvoltage	The main-circuit capacitor has deteriorated or has an anomaly.	Gr.1	No
510h	Overspeed	The motor exceeded the maximum speed.	Gr.1	Yes
511h	Encoder Output Pulse Overspeed	• The pulse output speed for the setting of Pn212 (2212h) (Number of Encoder Output Pulses) was exceeded. (Rotary Servomotor) • The motor speed upper limit for the setting of Pn281 (2281h) (Encoder Output Resolution) was exceeded. (Linear Servomotor)	Gr.1	Yes
520h	Vibration Alarm	Abnormal oscillation was detected in the motor speed.	Gr.1	Yes
521h	Autotuning Alarm	Vibration was detected during autotuning for the tuning- less function.	Gr.1	Yes
550h	Maximum Motor Speed Setting Error	The setting of Pn385 (2385h) (Maximum Motor Speed) is greater than the maximum motor speed.	Gr.1	Yes

Continued on next page.

Continued from previous page.

Alarm Number	Alarm Name	Alarm Meaning	Servomotor Stopping Method	Alarm Reset Possibility
710h	Instantaneous Overload	The servomotor was operating for several seconds to several tens of seconds under a torque that largely exceeded the rating.	Gr.2	Yes
720h	Continuous Overload	The servomotor was operating continuously under a torque that exceeded the rating.	Gr.1	Yes
730h	Dynamic Brake Overload	When the dynamic brake was applied, the rotational or linear kinetic energy exceeded the capacity of the dynamic brake resistor.	Gr.1	Yes
731h	Dynamic Brake Overload	When the dynamic brake was applied, the rotational or linear kinetic energy exceeded the capacity of the dynamic brake resistor.	Gr.1	Yes
740h	Inrush Current Limiting Resistor Overload	The main circuit power was frequently turned ON and OFF.	Gr.1	Yes
7A1h	Internal Temperature Error 1 (Control Board Temperature Error)	The surrounding temperature of the control board is abnormal.	Gr.2	Yes
7A2h	Internal Temperature Error 2 (Power Board Temperature Error)	The surrounding temperature of the power board is abnormal.	Gr.2	Yes
7A3h	Internal Temperature Sensor Error	An error occurred in the temperature sensor circuit.	Gr.2	No
7Abh	SERVOPACK Built-in Fan Stopped	The fan inside the SERVOPACK stopped.	Gr.1	Yes
810h	Encoder Backup Alarm	The power supplies to the encoder all failed and the position data was lost.	Gr.1	No
820h	Encoder Checksum Alarm	There is an error in the checksum results for encoder memory.	Gr.1	No
830h	Encoder Battery Alarm	The battery voltage was lower than the specified level after the control power was turned ON.	Gr.1	Yes
840h	Encoder Data Alarm	There is an internal data error in the encoder.	Gr.1	No
850h	Encoder Overspeed	The encoder was operating at high speed when the power was turned ON.	Gr.1	No
860h	Encoder Overheated	The internal temperature of encoder is too high.	Gr.1	No
861h	Motor Overheated	The internal temperature of motor is too high.	Gr.1	No
862h	Overheat Alarm	The input voltage (temperature) for the overheat protection input (TH) signal exceeded the setting of Pn61B (261Bh) (Overheat Alarm Level).	Gr.1	Yes
890h	Encoder Scale Error	A failure occurred in the linear encoder.	Gr.1	No
891h	Encoder Module Error	An error occurred in the linear encoder.	Gr.1	No
8A0h	External Encoder Error	An error occurred in the external encoder.	Gr.1	Yes
8A1h	External Encoder Module Error	An error occurred in the serial converter unit.	Gr.1	Yes
8A2h	External Incremental Encoder Sensor Error	An error occurred in the external encoder.	Gr.1	Yes
8A3h	External Absolute Encoder Position Error	An error occurred in the position data of the external encoder.	Gr.1	Yes
8A5h	External Encoder Overspeed	An overspeed error occurred in the external encoder.	Gr.1	Yes
8A6h	External Encoder Overheated	An overheating error occurred in the external encoder.	Gr.1	Yes
A10h	EtherCAT DC Synchronization Error	The SERVOPACK and Sync0 events cannot be synchronized.	Gr.2	Yes
A11h	EtherCAT State Error	The EtherCAT AL does not move to the Operational state when the DS402 drive is in Operation Enabled state.	Gr.2	Yes

Continued on next page.

Continued from previous page.

Alarm Number	Alarm Name	Alarm Meaning	Servomotor Stopping Method	Alarm Reset Possibility
A12h	EtherCAT Output Data Synchronization Error	The process data reception events and Sync0 events cannot be synchronized. (Process data communications failed.)	Gr.2	Yes
A20h	Parameter Setting Error	A parameter setting exceeds the setting range.	Gr.1	No
A41h	Communication Device Initialization Error	An error occurred during ESC initialization.	Gr.1	No
A47h	Loading Servo Information Error	Loading SERVOPACK information failed.	Gr.1	No
b33h	Current Detection Error 3	An error occurred in the current detection circuit.	Gr.1	No
bE2h	Firmware error	A firmware error occurred in the SERVOPACK.	Gr.1	No
bF0h	System Alarm 0	Internal program error 0 occurred in the SERVOPACK.	Gr.1	No
bF1h	System Alarm 1	Internal program error 1 occurred in the SERVOPACK.	Gr.1	No
bF2h	System Alarm 2	Internal program error 2 occurred in the SERVOPACK.	Gr.1	No
bF3h	System Alarm 3	Internal program error 3 occurred in the SERVOPACK.	Gr.1	No
bF4h	System Alarm 4	Internal program error 4 occurred in the SERVOPACK.	Gr.1	No
bF5h	System Alarm 5	Internal program error 5 occurred in the SERVOPACK.	Gr.1	No
bF6h	System Alarm 6	Internal program error 6 occurred in the SERVOPACK.	Gr.1	No
bF7h	System Alarm 7	Internal program error 7 occurred in the SERVOPACK.	Gr.1	No
bF8h	System Alarm 8	Internal program error 8 occurred in the SERVOPACK.	Gr.1	No
bFbh	System Alarm B	An internal program error B occurred in the SERVOPACK.	Gr.1	No
bFdh	System Alarm D	An internal program error D occurred in the SERVOPACK.	Gr.1	No
C10h	Servomotor Out of Control	The servomotor ran out of control.	Gr.1	Yes
C20h	Phase Detection Error	The detection of the phase is not correct.	Gr.1	No
C21h	Polarity Sensor Error	An error occurred in the polarity sensor.	Gr.1	No
C22h	Phase Information Disagreement	The phase information does not match.	Gr.1	No
C50h	Polarity Detection Failure	The polarity detection failed.	Gr.1	No
C51h	Overtravel Detected during Polarity Detection	The overtravel signal was detected during polarity detection.	Gr.1	Yes
C52h	Polarity Detection Not Completed	The servo was turned ON before the polarity was detected.	Gr.1	Yes
C53h	Out of Range of Motion for Polarity Detection	The travel distance exceeded the setting of Pn48E (248Eh) (Polarity Detection Range).	Gr.1	No
C54h	Polarity Detection Failure 2	The polarity detection failed.	Gr.1	No
C80h	Encoder Clear Error or Multiturn Limit Setting Error	The multiturn data for the absolute encoder was not correctly cleared or set.	Gr.1	No
C90h	Encoder Communications Error	Communications between the encoder and SERVOPACK is not possible.	Gr.1	No
C91h	Encoder Communications Position Data Acceleration Rate Error	An error occurred in calculating the position data of the encoder.	Gr.1	No
C92h	Encoder Communications Timer Error	An error occurred in the communications timer between the encoder and SERVOPACK.	Gr.1	No
CA0h	Encoder Parameter Error	The parameters in the encoder are corrupted.	Gr.1	No
Cb0h	Encoder Echoback Error	The contents of communications with the encoder are incorrect.	Gr.1	No

Continued on next page.

Continued from previous page.

Alarm Number	Alarm Name	Alarm Meaning	Servomotor Stopping Method	Alarm Reset Possibility
CC0h	Multiturn Limit Disagreement	Different multiturn limits have been set in the encoder and the SERVOPACK.	Gr.1	No
Cd1h	SigmaLINK II Node Configuration Error	A configuration that cannot be connected with SigmaLINK II was detected.	Gr.1	No
Cd2h	SigmaLINK II Power Supply Short-Circuit Detected	An error occurred in the power system of the SigmaLINK II connection.	Gr.1	No
Cd3h	SigmaLINK II Configuration Data Checksum Error	Saving the configuration data failed.	Gr.1	No
Cd4h	SigmaLINK II Node Change Detected	The content saved in the configuration and the content detected in node detection are different.	Gr.1	No
Cd7h	SigmaLINK II I/O Device Communications Error	An error occurred in communications with the SigmaLINK II I/O device.	Gr.2	No
Cd8h	SigmaLINK II I/O Device Status Error	The SigmaLINK II I/O device detected an error.	Gr.2	No
CF1h	Reception Failed Error in External Encoder	Communications between the external encoder and SERVOPACK is not possible.	Gr.1	No
CF2h	Timer Stopped Error in External Encoder	An error occurred in the communications timer between the external encoder and SERVOPACK.	Gr.1	No
d00h	Position Deviation Overflow	The setting of Pn520 (2520h) (Position Deviation Overflow Alarm Level) was exceeded by the position deviation.	Gr.1	Yes
d01h	Position Deviation Overflow Alarm at Servo ON	The servo was turned ON after the position deviation exceeded the setting of Pn526 (2526h) (Position Deviation Overflow Alarm Level at Servo ON) while the servo was OFF.	Gr.1	Yes
d02h	Position Deviation Overflow Alarm for Speed Limit at Servo ON	If position deviation remains in the deviation counter, the setting of Pn529 (2529h) or Pn584 (2584h) (Speed Limit Level at Servo ON) limits the speed when the servo is turned ON. This alarm occurs if position reference is input and the setting of Pn520 (2520h) (Position Deviation Overflow Alarm Level) is exceeded before the limit is cleared.	Gr.2	Yes
d04h	Overtravel Alarm	Overtravel was detected while the servo was ON.	Gr.1	Yes
d10h	Motor-Load Position Deviation Overflow	There was too much position deviation between the motor and load during fully-closed loop control.	Gr.2	Yes
d30h	Position Data Overflow	The position feedback data exceeded ±1879048192.	Gr.1	No
E00h	EtherCAT Initialization Timeout Error 1	Communications initialization failed between the servo control module and the EtherCAT communications module.	Gr.2	Yes
E02h	EtherCAT Internal Synchronization Error 1	A synchronization error occurred between the servo control module and the EtherCAT communications module.	Gr.1	Yes
E71	Safety Module Detection Failure	Detection of the safety module failed.	Gr.1	No
E72h	Feedback Option Module Detection Failure	Detection of the feedback option module failed.	Gr.1	No
E74h	Unsupported Safety Module	A safety module that is not supported by the SERVOPACK was connected.	Gr.1	No
E75h	Unsupported Feedback Option Module Alarm	An unsupported feedback option module was connected.	Gr.1	No
E81h	Safety Module Detection Disagreement	A safety module was connected that is a different model than the previous safety module.	Gr.1	No
EA0h	EtherCAT Initialization Timeout Error 2	Communications initialization failed between the servo control module and the EtherCAT communications module.	Gr.1	No
EA2h	EtherCAT Internal Synchronization Error 2	A synchronization error occurred between the servo control module and the EtherCAT communications module.	Gr.1	Yes

Continued on next page.

Continued from previous page.

Alarm Number	Alarm Name	Alarm Meaning	Servomotor Stopping Method	Alarm Reset Possibility
Eb1h	Safety Function Signal Input Timing Error	An error occurred in the input timing of the safety function signal.	Gr.1	No
EC6h	Safety Module System Error 2	An error occurred in a peripheral circuit of the safety module.	Gr.1	No
EC8h	Gate Drive Error 1	An error occurred in the gate drive circuit.	Gr.1	No
EC9h	Gate Drive Error 2	An error occurred in the gate drive circuit.	Gr.1	No
F10h	Power Supply Line Open Phase	The voltage was low for more than one second for phase R, S, or T when the main power was ON.	Gr.2	Yes
FL-1	System Alarm	An internal program error occurred in the SERVOPACK.	-	No
FL-2	System Alarm	An internal program error occurred in the SERVOPACK.	-	No
FL-3	System Alarm	An internal program error occurred in the SERVOPACK.	-	No
FL-4	System Alarm	An internal program error occurred in the SERVOPACK.	-	No
FL-5	System Alarm	An internal program error occurred in the SERVOPACK.	-	No
FL-6	System Alarm	An internal program error occurred in the SERVOPACK.	-	No
FL-7	System Alarm	An internal program error occurred in the SERVOPACK.	-	No
CPF00	Digital Operator Communications Error 1	Communications were not possible between the digital operator and the SERVOPACK.	-	No
CPF01	Digital Operator Communications Error 2	Communications were not possible between the digital operator and the SERVOPACK.	-	No

16.2.2 Troubleshooting Alarms

The causes of and corrections for the alarms are given in the following table. Contact your Yaskawa representative if you cannot solve a problem with the correction given in the table.

◆ 020h:Parameter Checksum Error

Possible Cause	Confirmation	Correction	Reference
The power supply voltage suddenly dropped.	Measure the power supply voltage.	Set the power supply voltage within the specified range, and initialize the parameter settings.	176
The power was shut OFF while writing parameter settings.	Check the timing of shutting OFF the power.	Initialize the parameter settings and then set the parameters again.	176
The number of times that parameters were written exceeded the limit.	Check to see if the parameters were frequently changed from the host controller.	The SERVOPACK may be faulty. Replace the SERVOPACK. Reconsider the method for writing the parameters.	–
A malfunction was caused by noise from the AC power supply, ground, static electricity, or other source.	Turn the power to the SERVOPACK OFF and ON again. If the alarm still occurs, noise may be the cause.	Implement countermeasures against noise.	119
Gas, water drops, or cutting oil entered the SERVOPACK and caused failure of the internal components.	Check the installation conditions.	The SERVOPACK may be faulty. Replace the SERVOPACK.	–
A failure occurred in the SERVOPACK.	Turn the power to the SERVOPACK OFF and ON again. If the alarm still occurs, the SERVOPACK may have failed.	The SERVOPACK may be faulty. Replace the SERVOPACK.	–

◆ 021h:Parameter Format Error

Possible Cause	Confirmation	Correction	Reference
The software version of the SERVOPACK that caused the alarm is older than the software version of the parameters specified to write.	Read the product information to see if the software versions are the same. If they are different, it could be the cause of the alarm.	Write the parameters from another SERVOPACK with the same model and the same software version, and then turn the power OFF and ON again.	496
A failure occurred in the SERVOPACK.	–	The SERVOPACK may be faulty. Replace the SERVOPACK.	–

◆ 022h:System Checksum Error

Possible Cause	Confirmation	Correction	Reference
The power supply voltage suddenly dropped.	Measure the power supply voltage.	The SERVOPACK may be faulty. Replace the SERVOPACK.	–
The power was shut OFF while setting a utility function.	Check the timing of shutting OFF the power.	The SERVOPACK may be faulty. Replace the SERVOPACK.	–
A failure occurred in the SERVOPACK.	Turn the power to the SERVOPACK OFF and ON again. If the alarm still occurs, the SERVOPACK may have failed.	The SERVOPACK may be faulty. Replace the SERVOPACK.	–

◆ 024h:System Alarm
025h:System Alarm
030h:Main Circuit Detector Error

Possible Cause	Confirmation	Correction	Reference
A failure occurred in the SERVOPACK.	–	The SERVOPACK may be faulty. Replace the SERVOPACK.	–

◆ 040h:Parameter Setting Error

Possible Cause	Confirmation	Correction	Reference
The SERVOPACK and servomotor capacities do not match each other.	Check the combination of the SERVOPACK and servomotor capacities.	Select a proper combination of SERVOPACK and servomotor capacities.	59
The motor parameter file was not written to the linear encoder. (This applies only when not using a serial converter unit.)	Check to see if the motor parameter file was written to the linear encoder.	Write the motor parameter file to the linear encoder.	184
A failure occurred in the SERVOPACK.	–	The SERVOPACK may be faulty. Replace the SERVOPACK.	–
A parameter setting is outside of the setting range.	Check the setting ranges of the parameters that have been changed.	Set the parameters to values within the setting ranges.	223
A pin number or sequence input number that does not exist on the SERVOPACK was allocated in Pn590 to Pn5BC = n.□XXX (Allocated Pin Number). (An alarm will not occur, however, if the signal is disabled.)	Check the setting of Pn590 to Pn5BC = n.□XXX.	Set a pin number or sequence input number that exists in Pn590 to Pn5BC = n.□XXX.	233
The position unit is outside of the setting range.	Make sure it is within the following range. 0.001 ≤ Position User Unit (2701h: 1)/ Position User Unit (2701h: 2) ≤ 64000	Correct the setting of Position User Unit (2701h).	–

◆ 041h:Encoder Output Pulse Setting Error

Possible Cause	Confirmation	Correction	Reference
The setting of Pn212 (2212h) (Number of Encoder Output Pulses) or Pn281 (2281h) (Encoder Output Resolution) is outside of the setting range or does not satisfy the setting conditions.	Check the setting of Pn212 (2212h) or Pn281 (2281h).	Set Pn212 (2212h) or Pn281 (2281h) to an appropriate value.	252

◆ 042h:Parameter Combination Error

Possible Cause	Confirmation	Correction	Reference
The speed of program jogging went below the setting range when Pn533 (2533h) or Pn585 (2585h) (Program Jogging Movement Speed) was changed.	Check if the setting of Pn533 (2533h) or Pn585 (2585h) satisfies the conditions given in the preparations for program jogging.	Increase the setting of Pn533 (2533h) or Pn585 (2585h).	319
Triggers at preset positions are enabled, but the allocations of the input signal allocation mode settings are not correct.	Check the settings of Pn660 = n.X□□□ (Triggers at Preset Positions Selections) and Pn50A = n.□□□X (Input Signal Allocation Mode).	Set Pn660 to n.1□□□ (enable triggers at preset positions), and set Pn50A to n.□□□2 (use Pn590 to Pn5BC (Sigma-LINK II input signal allocation mode)).	–

◆ 044h:Semi-Closed/Fully-Closed Loop Control Parameter Setting Error

Possible Cause	Confirmation	Correction	Reference
The node specified by Pn0DA (20DAh) or Pn0DB (20DBh) does not exist.	Check if the setting for Pn0DA (20DAh) or Pn0DB (20DBh) is the node address of the connected device.	Set Pn0DA (20DAh) and Pn0DB (20DBh) to appropriate values.	550
An unsupported serial converter unit, encoder, or external encoder was specified by Pn0DA (20DAh).	Check if the connected serial converter unit, encoder, or external encoder is a supported model.	Connect a supported serial converter unit, encoder, or external encoder.	550
A serial converter unit, encoder, or external encoder was specified by Pn0DA (20DAh).	Check the node address set in Pn0DA (20DAh).	Set the node address of a servomotor in Pn0DA (20DAh).	550
A servomotor was specified by Pn0DB (20DBh).	Check the node address set in Pn0DB (20DBh).	Set the node address of a serial converter unit, encoder, or external encoder in Pn0DB (20DBh) (a servomotor cannot be used as an external encoder).	550
An I/O device was specified by Pn0DA (20DAh) or Pn0DB (20DBh).	Check the node address set in Pn0DA (20DAh) and Pn0DB (20DBh).	Set the node address of a servomotor in Pn0DA (20DAh), and set the node address of a serial converter unit, encoder, or external encoder in Pn0DB (20DBh).	550
The same node was specified in Pn0DA (20DAh) and Pn0DB (20DBh).	Check if Pn0DA (20DAh) and Pn0DB (20DBh) are the same value.	Set Pn0DA (20DAh) and Pn0DB (20DBh) to different values.	550
The setting of Pn002 (2002h) = n.X□□□ (External Encoder Usage) and the device status do not match.	Check the setting of Pn002 (2002h) = n.X□□□.	Make sure that the setting of Pn002 (2002h) = n.X□□□ agrees with the device status.	530

◆ 046h:SigmaLINK II Command/Response Parameter Setting Error

Possible Cause	Confirmation	Correction	Reference
Slave parameters specified by Pn050 to Pn05E and Pn090 to Pn096 (Sigma-LINK II Response Data Selection 1 to 8/SigmaLINK II Command Data Selection 1 to 4) do not exist.	Check the parameter numbers set in Pn050 to Pn05E and Pn090 to Pn096.	Refer to the I/O device manual and set the correct values.	–

◆ 047h:Encoder with Functional Safety - Safety Mode Setting Error

Possible Cause	Confirmation	Correction	Reference
An encoder with functional safety set to safety mode is connected, but a safety module is not connected.	• Check the connection status of the safety module. • Use the SigmaWin+ to check the safety mode setting status of the encoder with functional safety.	• Connect a safety module. • Change the setting of the encoder with functional safety to non-safety mode.	–

◆ 050h:Combination Error

Possible Cause	Confirmation	Correction	Reference
The SERVOPACK and servomotor capacities do not match each other.	Confirm that the following condition is met: 1/4 ≤ (Servomotor capacity/SERVOPACK capacity) ≤ 4	Select a proper combination of the SERVOPACK and servomotor capacities.	59
A failure occurred in the encoder.	Replace the encoder and check to see if the alarm still occurs.	Replace the servomotor or encoder.	–
A failure occurred in the SERVOPACK.	–	The SERVOPACK may be faulty. Replace the SERVOPACK.	–

◆ 051h:Unsupported Device Alarm

Possible Cause	Confirmation	Correction	Reference
The motor parameter file was not written to the linear encoder. (This applies only when not using a serial converter unit.)	Check to see if the motor parameter file was written to the linear encoder.	Write the motor parameter file to the linear encoder.	184
An unsupported serial converter unit or encoder (e.g., an external encoder) is connected to the SERVOPACK.	Check the product combination specifications.	Change to a correct combination of models.	–

◆ 070h:Motor Type Change Detected

Possible Cause	Confirmation	Correction	Reference
A rotary servomotor was removed and a linear servomotor was connected.	–	Set the parameters for a linear servomotor and reset the motor type alarm. Then, turn the power to the SERVOPACK OFF and ON again.	735
A linear servomotor was removed and a rotary servomotor was connected.	–	Set the parameters for a rotary servomotor and reset the motor type alarm. Then, turn the power to the SERVOPACK OFF and ON again.	735
The node specified by Pn0DA (20DAh) was changed from rotary servomotor to linear servomotor.	Check the setting of Pn0DA (20DAh).	Change Pn0DA (20DAh) to the setting for a linear servomotor and reset the motor type alarm. Then, turn the power to the SERVOPACK OFF and ON again.	550, 735
The node specified by Pn0DA (20DAh) was changed from linear servomotor to rotary servomotor.	Check the setting of Pn0DA (20DAh).	Change Pn0DA (20DAh) to the setting for a rotary servomotor and reset the motor type alarm. Then, turn the power to the SERVOPACK OFF and ON again.	550, 735

◆ 080h:Linear Encoder Pitch Setting Error

Possible Cause	Confirmation	Correction	Reference
The setting of Pn282 (2282h) (Linear Encoder Scale Pitch) has not been changed from the default setting.	Check the setting of Pn282 (2282h).	Correct the setting of Pn282 (2282h).	183

◆ 100h:Overcurrent Detected

Possible Cause	Confirmation	Correction	Reference
The main circuit cable is not wired correctly or there is faulty contact.	Check the wiring.	Correct the wiring.	143
There is a short-circuit or ground fault in a main circuit cable.	Check for short-circuits across servomotor phases U, V, and W, or between the ground and servomotor phases U, V, and W.	The cable may be shortcircuited. Replace the cable.	143
There is a short-circuit or ground fault inside the servomotor.	Check for short-circuits across servomotor phases U, V, and W, or between the ground and servomotor phases U, V, or W.	The servomotor may be faulty. Replace the servomotor.	143
There is a short-circuit or ground fault inside the SERVOPACK.	Check for short-circuits across the servomotor connection terminals U, V, and W on the SERVOPACK, or between the ground and terminals U, V, or W.	The SERVOPACK may be faulty. Replace the SERVOPACK.	143
The regenerative resistor is not wired correctly or there is faulty contact.	Check the wiring.	Correct the wiring.	143
The dynamic brake (DB, emergency stop executed from the SERVOPACK) was frequently activated, or a DB overload alarm occurred.	Check the power consumed by the DB resistor to see how frequently the DB is being used. Or, check the alarm display to see if an A.730 or A.731 alarm (Dynamic Brake Overload) has occurred.	Change the SERVOPACK model, operating methods, or the mechanisms so that the dynamic brake does not need to be used so frequently.	–
The regenerative processing capacity was exceeded.	Check the regenerative load ratio in the operation monitor of the SigmaWin+ to see how frequently the regenerative resistor is being used.	Recheck the operating conditions and load.	223
The SERVOPACK regenerative resistance is too small.	Check the regenerative load ratio in the operation monitor of the SigmaWin+ to see how frequently the regenerative resistor is being used.	Change the regenerative resistance to a value larger than the SERVOPACK minimum allowable resistance.	223
A heavy load was applied while the servomotor was stopped or running at a low speed.	Check to see if the operating conditions exceed servo drive specifications.	Reduce the load applied to the servomotor. Or, increase the operating speed.	–
A malfunction was caused by noise.	Improve the noise environment, e.g. by improving the wiring or installation conditions, and check to see if the alarm still occurs.	Implement countermeasures against noise, such as correct wiring of the FG. Use an FG wire size equivalent to the SERVOPACK's main circuit wire size.	–
A failure occurred in the SERVOPACK.	–	Turn the power to the SERVOPACK OFF and ON again. If the alarm still occurs, the SERVOPACK may be faulty. Replace the SERVOPACK.	–

◆ 101h:Motor Overcurrent Detected
102h:Motor Overcurrent Detected 2

Possible Cause	Confirmation	Correction	Reference
The main circuit cable is not wired correctly or there is faulty contact.	Check the wiring.	Correct the wiring.	143
There is a short-circuit or ground fault in a main circuit cable.	Check for short-circuits across servomotor phases U, V, and W, or between the ground and servomotor phases U, V, and W.	The cable may be shortcircuited. Replace the cable.	143
There is a short-circuit or ground fault inside the servomotor.	Check for short-circuits across servomotor phases U, V, and W, or between the ground and servomotor phases U, V, or W.	The servomotor may be faulty. Replace the servomotor.	143
There is a short-circuit or ground fault inside the SERVOPACK.	Check for short-circuits across the servomotor connection terminals U, V, and W on the SERVOPACK, or between the ground and terminals U, V, or W.	The SERVOPACK may be faulty. Replace the SERVOPACK.	143
A heavy load was applied while the servomotor was stopped or running at a low speed.	Check to see if the operating conditions exceed servo drive specifications.	Reduce the load applied to the servomotor. Or, increase the operating speed.	–
A malfunction was caused by noise.	Improve the noise environment, e.g. by improving the wiring or installation conditions, and check to see if the alarm still occurs.	Implement countermeasures against noise, such as correct wiring of the FG. Use an FG wire size equivalent to the SERVOPACK's main circuit wire size.	–
A failure occurred in the SERVOPACK.	–	Turn the power to the SERVOPACK OFF and ON again. If the alarm still occurs, the SERVOPACK may be faulty. Replace the SERVOPACK.	–

◆ 300h:Regeneration Error

Possible Cause	Confirmation	Correction	Reference
When using the built-in regenerative resistor, the jumper between the regenerative resistor terminals (B2 and B3) was removed from one of the following SERVOPACKs: SGDXS-3R8A, -5R5A, -7R6A, -120A, -180A, -200A, -330A, -1R9D, -3R5D, -5R4D, -8R4D, -120D, or -170D.	Confirm to see if the jumper is connected between main circuit terminals B2 and B3.	Correctly connect a jumper.	139
The external regenerative resistor or regenerative resistor unit is not wired correctly, or was removed or disconnected.	Check the wiring of the external regenerative resistor or regenerative resistor unit.	Remove the jumper between B2 and B3, and correctly wire the external regenerative resistor or regenerative resistor unit.	139
Pn600 (2600h) (Regenerative Resistor Capacity) is not set to 0 and an external regenerative resistor is not connected to one of the following SERVOPACKs: SGDXS-R70A, -R90A,-1R6A, or -2R8A.	Check to see if an external regenerative resistor is connected and check the setting of Pn600 (2600h).	Connect an external regenerative resistor, or set Pn600 (2600h) (Regenerative Resistor Capacity) to 0 (setting unit: ×10 W) if no regenerative resistor is required.	223
An external regenerative resistor is not connected to one of the following SERVOPACKs: SGDXS-470A, -550A, -590A, -780A, -210D, -260D, -280D, or -370D.	Check to see if an external regenerative resistor or regenerative resistor unit is connected and check the setting of Pn600 (2600h).	Connect an external regenerative resistor and set Pn600 (2600h) to an appropriate value. Or connect a regenerative resistor unit and set Pn600 (2600h) (Regenerative Resistor Capacity) to 0 (setting unit: 10 W).	223
A failure occurred in the SERVOPACK.	–	While the main circuit power is OFF, turn the control power to the SERVOPACK OFF and ON again. If the alarm still occurs, the SERVOPACK may be faulty. Replace the SERVOPACK.	–

◆ 320h:Regenerative Overload

Possible Cause	Confirmation	Correction	Reference
The power supply voltage exceeded the specified range.	Measure the power supply voltage.	Set the power supply voltage within the specified range.	–
The external regenerative resistance value or regenerative resistor capacity is too small, or there has been a continuous regeneration state.	Check the operating conditions or the capacity.	Change the regenerative resistance value or capacity. Reconsider the operating conditions.	223
There was a continuous regeneration state because a negative load was continuously applied.	Check the load applied to the servomotor during operation.	Reconsider the system including the servo, machine, and operating conditions.	–
The setting of Pn600 (2600h) (Regenerative Resistor Capacity) is smaller than the capacity of the external regenerative resistor.	Check to see if a regenerative resistor is connected and check the setting of Pn600 (2600h).	Correct the setting of Pn600 (2600h).	223
The setting of Pn603 (2603h) (Regenerative Resistance) is smaller than the capacity of the external regenerative resistor.	Check to see if a regenerative resistor is connected and check the setting of Pn603 (2603h).	Correct the setting of Pn603 (2603h).	223
The external regenerative resistance is too high.	Check the regenerative resistance.	Change the regenerative resistance to a correct value or use an external regenerative resistor of an appropriate capacity.	223
A failure occurred in the SERVOPACK.	–	The SERVOPACK may be faulty. Replace the SERVOPACK.	–

◆ 330h:Main Circuit Power Supply Wiring Error

Possible Cause	Confirmation	Correction	Reference
The regenerative resistor was disconnected when the SERVOPACK power supply voltage was high.	Measure the resistance of the regenerative resistor using a measuring instrument.	If you are using the regenerative resistor built into the SERVOPACK, replace the SERVOPACK. If you are using an external regenerative resistor, replace the external regenerative resistor.	–
DC power was supplied when an AC power supply input was specified in the settings.	Check the power supply to see if it is a DC power supply.	Correct the power supply setting to match the actual power supply.	178
AC power was supplied when a DC power supply input was specified in the settings.	Check the power supply to see if it is an AC power supply.	Correct the power supply setting to match the actual power supply.	178
Pn600 (2600h) (Regenerative Resistor Capacity) is not set to 0 and an external regenerative resistor is not connected to one of the following SERVOPACKs: SGDXS-R70A, -R90A,-1R6A, or -2R8A.	Check to see if an external regenerative resistor is connected and check the setting of Pn600 (2600h).	Connect an external regenerative resistor, or if an external regenerative resistor is not required, set Pn600 (2600h) to 0.	139 , 223
When using the built-in regenerative resistor, the jumper between the regenerative resistor terminals (B2 and B3) was removed from one of the following SERVOPACKs: SGDXS-3R8A, -5R5A, -7R6A, -120A, -180A, -200A, -330A, -1R9D, -3R5D, -5R4D, -8R4D, -120D, or -170D.	Confirm to see if the jumper is connected between main circuit terminals B2 and B3.	Correctly connect a jumper.	139
The external regenerative resistor or regenerative resistor unit is not wired correctly, or was removed or disconnected.	Check the wiring of the external regenerative resistor or regenerative resistor unit.	Remove the jumper between B2 and B3, and correctly wire the external regenerative resistor or regenerative resistor unit.	139
A failure occurred in the SERVOPACK.	–	The SERVOPACK may be faulty. Replace the SERVOPACK.	–

◆ 400h:Overvoltage

Possible Cause	Confirmation	Correction	Reference
The power supply voltage exceeded the specified range.	Measure the power supply voltage.	Set the AC/DC power supply voltage within the specified range.	–
The power supply is not stable or was influenced by a lightning surge.	Measure the power supply voltage.	Improve the power supply conditions, install a surge absorber, and then turn the power OFF and ON again. If the alarm still occurs, the SERVOPACK may be faulty. Replace the SERVOPACK.	–
The voltage for AC power supply was too high during acceleration or deceleration.	Check the power supply voltage and the speed and torque during operation.	Set the AC power supply voltage within the specified range.	–
The external regenerative resistance is too high for the operating conditions.	Check the operating conditions and the regenerative resistance.	Select a regenerative resistance value that is appropriate for the operating conditions and load.	223
The load moment of inertia ratio or mass ratio exceeded the allowable value.	Check to see if the moment of inertia ratio or mass ratio is within the allowable range.	Increase the deceleration time, or reduce the load.	–
A failure occurred in the SERVOPACK.	–	While the main circuit power is OFF, turn the control power to the SERVOPACK OFF and ON again. If the alarm still occurs, the SERVOPACK may be faulty. Replace the SERVOPACK.	–

◆ 410h:Undervoltage

Possible Cause	Confirmation	Correction	Reference
The power supply voltage went below the specified range.	Measure the power supply voltage.	Set the power supply voltage within the specified range.	–
The power supply voltage dropped during operation.	Measure the power supply voltage.	Increase the power supply capacity.	–
A momentary power interruption occurred.	Measure the power supply voltage.	If you have changed the setting of Pn509 (2509h) (Momentary Power Interruption Hold Time), decrease the setting.	244
The SERVOPACK fuse is blown out.	Check the power supply wiring.	Correct the power supply wiring and replace the SERVOPACK.	141
The SERVOPACK fuse is blown out.	–	Replace the SERVOPACK and connect a reactor to the DC reactor terminals (⊖1, ⊖2) on the SERVOPACK.	–
The jumper between the DC reactor terminals (⊖1 and ⊖2) has been removed or is making poor contact.	–	Correct the wiring between the DC reactor terminals.	–
The DC reactor is not wired correctly or there is poor contact.	–	Correct the wiring between the DC reactor terminals.	–
A failure occurred in the SERVOPACK.	–	The SERVOPACK may be faulty. Replace the SERVOPACK.	–

◆ 450h:Main-Circuit Capacitor Overvoltage

Possible Cause	Confirmation	Correction	Reference
A failure occurred in the SERVOPACK.	–	The SERVOPACK may be faulty. Replace the SERVOPACK.	–

◆ 510h:Overspeed

Possible Cause	Confirmation	Correction	Reference
The order of phases U, V, and W in the motor wiring is not correct.	Check the wiring of the servomotor.	Make sure that the servomotor is correctly wired.	–
A reference value that exceeded the overspeed detection level was input.	Check the input reference.	Reduce the reference value. Or, adjust the gain.	–
The motor exceeded the maximum speed.	Check the waveform of the motor speed.	Adjust the servo gain. Or, reconsider the operating conditions.	–
A failure occurred in the SERVOPACK.	–	The SERVOPACK may be faulty. Replace the SERVOPACK.	–

◆ 511h:Encoder Output Pulse Overspeed

Possible Cause	Confirmation	Correction	Reference
The encoder output pulse frequency exceeded the limit.	Check the encoder output pulse setting.	Decrease the setting of Pn212 (2212h) (Number of Encoder Output Pulses) or Pn281 (2281h) (Encoder Output Resolution).	252
The encoder output pulse frequency exceeded the limit because the motor speed was too high.	Check the encoder output pulse setting and the motor speed.	Reduce the motor speed.	–

◆ 520h:Vibration Alarm

Possible Cause	Confirmation	Correction	Reference
Abnormal oscillation was detected in the motor speed.	Check for abnormal motor noise, and check the speed and torque waveforms during operation.	Reduce the motor speed. Or, reduce the setting of Pn100 (2100h) (Speed Loop Gain).	471
The setting of Pn103 (2103h) (Moment of Inertia Ratio) is greater than the actual moment of inertia or was greatly changed.	Check the moment of inertia ratio or mass ratio.	Set Pn103 (2103h) (Moment of Inertia Ratio) to an appropriate value.	348
The setting of Pn312 (2312h) or Pn384 (2384h) (Vibration Detection Level) is not suitable.	Check that the setting of Pn312 (2312h) or Pn384 (2384h) (Vibration Detection Level) is suitable.	Set Pn312 (2312h) or Pn384 (2384h) (Vibration Detection Level) to an appropriate value.	276

◆ 521h:Autotuning Alarm

Possible Cause	Confirmation	Correction	Reference
The servomotor vibrated considerably while performing the tuning-less function.	Check the waveform of the motor speed.	Reduce the load so that the load moment of inertia ratio is within the allowable value. Or increase the load level or reduce the response level in the tuning-less level settings.	344
The servomotor vibrated considerably while performing custom tuning or Easy FFT.	Check the waveform of the motor speed.	Check the operating procedure of corresponding function and implement corrections.	402 , 490

◆ 550h:Maximum Motor Speed Setting Error

Possible Cause	Confirmation	Correction	Reference
The setting of Pn385 (2385h) (Maximum Motor Speed) is greater than the maximum speed.	Check the setting of Pn385 (2385h), and the upper limits of the maximum motor speed setting and the encoder output resolution setting.	Set Pn385 (2385h) to a value that does not exceed the maximum motor speed.	247

◆ 710h:Instantaneous Overload

Possible Cause	Confirmation	Correction	Reference
The wiring is not correct or there is a faulty connection in the motor or encoder wiring.	Check the wiring.	Make sure that the servomotor and encoder are correctly wired.	143
Operation was performed that exceeded the overload protection characteristics.	Check the motor overload characteristics and operation reference.	Reconsider the load and operating conditions. Or, increase the motor capacity.	–
An excessive load was applied during operation because the servomotor was not driven due to mechanical problems.	Check the operation reference and motor speed.	Remove the mechanical problem.	–
Operation was performed with a load applied to the shaft of the servomotor that exceeded the allowable value.	Check the condition of the machine to determine if a load was applied to the shaft of the servomotor that exceeded the allowable value.	Correct the condition of the machine so that the load on the shaft during servomotor operation does not exceed the allowable value.	–
There is an error in the setting of Pn282 (2282h) (Linear Encoder Scale Pitch).	Check the setting of Pn282 (2282h).	Set Pn282 (2282h) to an appropriate value.	183
There is an error in the setting of Pn080 (2080h) = n.□□X□ (Motor Phase Sequence Selection).	Check the setting of Pn080 (2080h) = n.□□X□.	Set Pn080 (2080h) = n.□□X□ to an appropriate value.	188
A failure occurred in the SERVOPACK.	–	The SERVOPACK may be faulty. Replace the SERVOPACK.	–

◆ 720h:Continuous Overload

Possible Cause	Confirmation	Correction	Reference
The wiring is not correct or there is a faulty connection in the motor or encoder wiring.	Check the wiring.	Make sure that the servomotor and encoder are correctly wired.	143
Operation was performed that exceeded the overload protection characteristics.	Check the motor overload characteristics and operation reference.	Reconsider the load and operating conditions. Or, increase the motor capacity.	–
An excessive load was applied during operation because the servomotor was not driven due to mechanical problems.	Check the operation reference and motor speed.	Remove the mechanical problem.	–
There is an error in the setting of Pn282 (2282h) (Linear Encoder Scale Pitch).	Check the setting of Pn282 (2282h).	Set Pn282 (2282h) to an appropriate value.	183
There is an error in the setting of Pn080 (2080h) = n.□□X□ (Motor Phase Sequence Selection).	Check the setting of Pn080 (2080h) = n.□□X□.	Set Pn080 (2080h) = n.□□X□ to an appropriate value.	188
A failure occurred in the SERVOPACK.	–	The SERVOPACK may be faulty. Replace the SERVOPACK.	–

◆ 730h:Dynamic Brake Overload
731h:Dynamic Brake Overload

Possible Cause	Confirmation	Correction	Reference
The servomotor was rotated by an external force.	Check the operation status.	Implement measures to ensure that the motor will not be rotated by an external force.	–
When the servomotor was stopped with the dynamic brake, the rotational or linear kinetic energy exceeded the capacity of the dynamic brake resistor.	Check the power consumed by the DB resistor to see how frequently the DB is being used.	Reconsider the following: • Reduce the servomotor command speed. • Decrease the moment of inertia ratio or mass ratio. • Reduce the frequency of stopping with the dynamic brake.	–
A failure occurred in the SERVOPACK.	–	The SERVOPACK may be faulty. Replace the SERVOPACK.	–

◆ 740h:Inrush Current Limiting Resistor Overload

Possible Cause	Confirmation	Correction	Reference
The allowable frequency of the inrush current limiting resistor was exceeded when the main circuit power was turned ON and OFF.	–	Reduce the frequency of turning the main circuit power ON and OFF.	–
A failure occurred in the SERVOPACK.	–	The SERVOPACK may be faulty. Replace the SERVOPACK.	–

◆ 7A1h:Internal Temperature Error 1 (Control Board Temperature Error)
7A2h:Internal Temperature Error 2 (Power Board Temperature Error)

Possible Cause	Confirmation	Correction	Reference
The surrounding temperature is too high.	Check the surrounding temperature using a thermometer. Or, check the operating status with the SERVOPACK installation environment monitor.	Decrease the surrounding temperature by improving the SERVOPACK installation conditions.	108
An overload alarm was reset by turning OFF the power too many times.	Check the alarm display to see if there is an overload alarm.	Change the method for resetting the alarm.	–
There was an excessive load or operation was performed that exceeded the regenerative processing capacity.	Check the load during operation with [Cumulative Load] and check the regenerative capacity with [Regenerative Load] on the operation monitor of the SigmaWin+.	Reconsider the load and operating conditions.	–
The SERVOPACK installation orientation is not correct or there is insufficient space around the SERVOPACK.	Check the SERVOPACK installation conditions.	Install the SERVOPACK according to specifications.	105 , 107
A failure occurred in the SERVOPACK.	–	The SERVOPACK may be faulty. Replace the SERVOPACK.	–

◆ 7A3h:Internal Temperature Sensor Error

Possible Cause	Confirmation	Correction	Reference
A failure occurred in the SERVOPACK.	–	The SERVOPACK may be faulty. Replace the SERVOPACK.	–

◆ 7Abh:SERVOPACK Built-in Fan Stopped

Possible Cause	Confirmation	Correction	Reference
The fan inside the SERVOPACK stopped.	Check for foreign matter inside the SERVOPACK.	Remove foreign matter from the SERVOPACK. If the alarm still occurs, the SERVOPACK may be faulty. Replace the SERVOPACK.	–

◆ 810h:Encoder Backup Alarm

Possible Cause	Confirmation	Correction	Reference
The power to the absolute encoder was turned ON for the first time.	Check to see if the power was turned ON for the first time.	Set up the encoder.	217
The encoder cable was disconnected and then connected again.	Check to see if the power was turned ON for the first time.	Check the encoder connection and set up the encoder.	217
Power is not being supplied both from the control power supply (+5 V) from the SERVOPACK and from the battery power supply.	Check the encoder connector battery and the connector status.	Replace the battery or implement similar measures to supply power to the encoder, and set up the encoder.	217
A failure occurred in the absolute encoder.	–	If the alarm still occurs after setting up the encoder again, replace the servomotor.	–
A failure occurred in the SERVOPACK.	–	The SERVOPACK may be faulty. Replace the SERVOPACK.	–

◆ 820h:Encoder Checksum Alarm

Possible Cause	Confirmation	Correction	Reference
A failure occurred in the encoder.	–	• When Using an Absolute Encoder Set up the encoder again. If the alarm still occurs, the servomotor may be faulty. Replace the servomotor. • When Using a Singleturn Absolute Encoder or Incremental Encoder – The servomotor may be faulty. Replace the servomotor. – The linear encoder may be faulty. Replace the linear encoder.	217
A failure occurred in the SERVOPACK.	–	The SERVOPACK may be faulty. Replace the SERVOPACK.	–

◆ 830h:Encoder Battery Alarm

Possible Cause	Confirmation	Correction	Reference
The battery connection is faulty or a battery is not connected.	Check the battery connection.	Correct the battery connection.	144
The battery voltage is lower than the specified value (2.7 V).	Measure the battery voltage.	Replace the battery.	695
A failure occurred in the SERVOPACK.	–	The SERVOPACK may be faulty. Replace the SERVOPACK.	–

◆ 840h:Encoder Data Alarm

Possible Cause	Confirmation	Correction	Reference
The encoder malfunctioned.	–	Turn the power to the SERVOPACK OFF and ON again. If the alarm still occurs, the servomotor or linear encoder may be faulty. Replace the servomotor or linear encoder.	–
An error occurred in reading data from the linear encoder.	–	The linear encoder is not mounted within an appropriate tolerance. Correct the mounting of the linear encoder.	–
Excessive speed occurred in the linear encoder.	–	Control the motor speed within the range specified by the linear encoder manufacturer and then turn ON the control power.	–
The encoder malfunctioned due to noise.	–	Correct the wiring around the encoder by separating the encoder cable from the servomotor main circuit cable or by grounding the encoder.	–
The polarity sensor is not wired correctly.	Check the wiring of the polarity sensor.	Correct the wiring of the polarity sensor.	–
The polarity sensor failed.	–	Replace the polarity sensor.	–

◆ 850h:Encoder Overspeed

Possible Cause	Confirmation	Correction	Reference
Rotary Servomotor: The servomotor speed was 200 min^{-1} or higher when the control power was turned ON.	Check the motor speed when the power is turned ON.	Reduce the servomotor speed to a value less than 200 min^{-1}, and turn ON the control power.	–
Linear Servomotor: The servomotor exceeded the specified speed when the control power was turned ON.	Check the motor speed when the power is turned ON.	Control the motor speed within the range specified by the linear encoder manufacturer and then turn ON the control power.	–
A failure occurred in the encoder.	–	Turn the power to the SERVOPACK OFF and ON again. If the alarm still occurs, the servomotor or linear encoder may be faulty. Replace the servomotor or linear encoder.	–
A failure occurred in the SERVOPACK.	–	Turn the power to the SERVOPACK OFF and ON again. If the alarm still occurs, the SERVOPACK may be faulty. Replace the SERVOPACK.	–

◆ 860h:Encoder Overheated

Possible Cause	Confirmation	Correction	Reference
The surrounding temperature around the servomotor is too high.	Measure the surrounding temperature around the servomotor.	Reduce the surrounding temperature of the servomotor to 40°C or less.	–
The servomotor load is greater than the rated load.	Check the load with the [Cumulative Load] on the operation monitor of the SigmaWin+.	Operate the servo drive so that the motor load remains within the specified range.	498
A failure occurred in the encoder.	–	Turn the power to the SERVOPACK OFF and ON again. If the alarm still occurs, the servomotor or absolute linear encoder may be faulty. Replace the servomotor or absolute linear encoder.	–
A failure occurred in the SERVOPACK.	–	Turn the power to the SERVOPACK OFF and ON again. If the alarm still occurs, the SERVOPACK may be faulty. Replace the SERVOPACK.	–

◆ 861h:Motor Overheated

Possible Cause	Confirmation	Correction	Reference
The surrounding temperature around the servomotor is too high.	Measure the surrounding temperature around the servomotor.	Reduce the surrounding temperature of the servomotor to 40°C or less.	–
The servomotor load is greater than the rated load.	Check the load with the [Cumulative Load] on the operation monitor of the SigmaWin+.	Operate the servo drive so that the motor load remains within the specified range.	498
A failure occurred in the serial converter unit.	–	Turn the power to the SERVOPACK OFF and ON again. If the alarm still occurs, the serial converter unit may be faulty. Replace the serial converter unit.	–
A failure occurred in the SERVOPACK.	–	Turn the power to the SERVOPACK OFF and ON again. If the alarm still occurs, the SERVOPACK may be faulty. Replace the SERVOPACK.	–

◆ 862h:Overheat Alarm

Possible Cause	Confirmation	Correction	Reference
The surrounding temperature is too high.	Check the surrounding temperature using a thermometer.	Lower the surrounding temperature by improving the installation conditions of the linear servomotor or the machine.	–
The overheat protection input signal line is disconnected or short-circuited.	Check the input voltage with the overheat protection input information on the operation monitor of the SigmaWin+.	Repair the line for the overheat protection input signal.	–
An overload alarm was reset by turning OFF the power too many times.	Check the alarm display to see if there is an overload alarm.	Change the method for resetting the alarm.	–
Operation was performed under an excessive load.	Check the load with the [Cumulative Load] on the operation monitor of the SigmaWin+.	Reconsider the load and operating conditions.	–
A failure occurred in the SERVOPACK.	–	The SERVOPACK may be faulty. Replace the SERVOPACK.	–
The temperature detection circuit in the linear servomotor is faulty or the sensor attached to the machine is faulty.	–	The temperature detection circuit in the linear servomotor may be faulty or the sensor attached to the machine may be faulty. Replace the linear servomotor or repair the sensor attached to the machine.	–

◆ 890h:Encoder Scale Error

Possible Cause	Confirmation	Correction	Reference
A failure occurred in the linear encoder.	–	The linear encoder may be faulty. Replace the linear encoder.	–

◆ 891h:Encoder Module Error

Possible Cause	Confirmation	Correction	Reference
A failure occurred in the linear encoder.	–	Turn the power to the SERVOPACK OFF and ON again. If the alarm still occurs, the linear encoder may be faulty. Replace the linear encoder.	–

◆ 8A0h:External Encoder Error

Possible Cause	Confirmation	Correction	Reference
Setting the origin of the absolute linear encoder failed because the motor moved.	Before you set the origin, use the fully-closed feedback pulse counter to confirm that the motor is not moving.	The motor must be stopped while setting the origin position.	220
A failure occurred in the external encoder.	–	Replace the external encoder.	–

◆ 8A1h:External Encoder Module Error

Possible Cause	Confirmation	Correction	Reference
A failure occurred in the external encoder.	–	Replace the external encoder.	–
A failure occurred in the serial converter unit.	–	Replace the serial converter unit.	–

◆ 8A2h:External Incremental Encoder Sensor Error

Possible Cause	Confirmation	Correction	Reference
A failure occurred in the external encoder.	–	Replace the external encoder.	–

◆ 8A3h:External Absolute Encoder Position Error

Possible Cause	Confirmation	Correction	Reference
A failure occurred in the external absolute encoder.	–	The external absolute encoder may be faulty. Refer to the encoder manufacturer's instruction manual for corrections.	–

◆ 8A5h:External Encoder Overspeed

Possible Cause	Confirmation	Correction	Reference
An overspeed error was detected in the external encoder.	Check the maximum speed of the external encoder.	Keep the external encoder below its maximum speed.	–

◆ 8A6h:External Encoder Overheated

Possible Cause	Confirmation	Correction	Reference
An overheating error was detected in the external encoder.	–	Replace the external encoder.	–

◆ A10h:EtherCAT DC Synchronization Error

Possible Cause	Confirmation	Correction	Reference
The synchronization timing (Sync0) for EtherCAT communications fluctuated.	–	Turn the power OFF and ON again and re-establish communications.	–

◆ A11h:EtherCAT State Error

Possible Cause	Confirmation	Correction	Reference
The EtherCAT communications state left the Operational state during motor operation.	–	Reset the alarm and then re-establish communications.	–

◆ A12h:EtherCAT Output Data Synchronization Error

Possible Cause	Confirmation	Correction	Reference
Noise caused an error in EtherCAT communications.	–	Check the EtherCAT wiring and implement noise countermeasures.	–
The controller did not update the process data during the fixed cycle.	Check the process data specified by the controller.	Correct the controller so that the process data is updated during the fixed cycle.	–
The EtherCAT communications cable or connector wiring is faulty.	Check the EtherCAT communications cable and connector wiring.	Wire the cable correctly.	–

◆ A20h:Parameter Setting Error

Possible Cause	Confirmation	Correction	Reference
The speed unit is outside of the setting range.	Make sure it is within the following range. 1/256 ≤ Velocity User Unit (2702h:1)/ Velocity User Unit (2702h:2) ≤ 33554432	Correct the setting of Velocity User Unit (2702h).	–
The acceleration unit is outside of the setting range.	Make sure it is within the following range. 1/256 ≤ Acceleration User Unit (2703h:1)/Acceleration User Unit (2703h:2) ≤ 1048576	Correct the setting of Acceleration User Unit (2703h).	–
The settings of the first and last rotational coordinate are outside the valid range.	Confirm that the settings conform to the following equation: Max position range limit (607Bh:2) - Min position range limit (607Bh:1) + 1 ≤ 0x7FFFFFFF	Correct the setting of Position Range Limit (607Bh).	–
When rotational coordinate system is enabled, the offset value between the zero point position of the application and the home position of the machine are outside the setting range.	Make sure it is within the following range. Min position range limit (607Bh:1) ≤ Home Offset (607Ch) ≤ Max position range limit (607Bh:2)	Correct the setting of Home Offset (607Ch).	–

◆ A41h:Communication Device Initialization Error

Possible Cause	Confirmation	Correction	Reference
A failure occurred in the SERVOPACK.	–	Turn the power to the SERVOPACK OFF and ON again. If the alarm still occurs, the SERVOPACK may be faulty. Replace the SERVOPACK.	–

◆ A47h:Loading Servo Information Error

Possible Cause	Confirmation	Correction	Reference
User Parameter Configuration (2700h) was executed while a utility function (Fn***) was being executed from the digital operator or SigmaWin+.	–	Turn the power OFF and ON again.	–
The power was turned ON or User Parameter Configuration (2700h) was executed when an encoder was not connected.	Check the wiring of the encoder.	Turn OFF the power, correct the encoder connection, and then turn the power ON again.	–
The power was turned ON or User Parameter Configuration (2700h) was executed when there was an alarm 040h (Parameter Setting Error).	Check the parameter settings.	Correct the parameter settings and turn the power OFF and ON again.	–
A failure occurred in the SERVOPACK.	–	Replace the SERVOPACK.	–

◆ b33h:Current Detection Error 3

Possible Cause	Confirmation	Correction	Reference
A failure occurred in the current detection circuit.	–	Turn the power to the SERVOPACK OFF and ON again. If the alarm still occurs, the SERVOPACK may be faulty. Replace the SERVOPACK.	–

◆ bE2h:Firmware error
bF0h:System Alarm 0
bF1h:System Alarm 1
bF2h:System Alarm 2
bF3h:System Alarm 3
bF4h:System Alarm 4
bF5h:System Alarm 5
bF6h:System Alarm 6
bF7h:System Alarm 7
bF8h:System Alarm 8
bFbh:System Alarm B
bFdh:System Alarm D

Possible Cause	Confirmation	Correction	Reference
A failure occurred in the SERVOPACK.	–	Turn the power to the SERVOPACK OFF and ON again. If the alarm still occurs, the SERVOPACK may be faulty. Replace the SERVOPACK.	–

◆ C10h:Servomotor Out of Control

Possible Cause	Confirmation	Correction	Reference
The order of phases U, V, and W in the motor wiring is not correct.	Check the servomotor wiring.	Make sure that the servomotor is correctly wired.	–
There is an error in the setting of Pn080 (2080h) = n.□□X□ (Motor Phase Sequence Selection).	Check the setting of Pn080 (2080h) = n.□□X□.	Set Pn080 (2080h) = n.□□X□ to an appropriate value.	188
When using an absolute encoder, the setting of Pn080 (2080h) = n.□□X□ (Motor Phase Sequence Selection) was changed after polarity detection was executed.	–	Execute polarity detection again.	191
A failure occurred in the encoder.	–	If the motor wiring is correct and an alarm still occurs after turning the power OFF and ON again, the servomotor or linear encoder may be faulty. Replace the servomotor or linear encoder.	–
A failure occurred in the SERVOPACK.	–	Turn the power to the SERVOPACK OFF and ON again. If the alarm still occurs, the SERVOPACK may be faulty. Replace the SERVOPACK.	–

◆ C20h:Phase Detection Error

Possible Cause	Confirmation	Correction	Reference
The linear encoder signal level is too low.	Check the voltage of the linear encoder signal.	Fine-tune the mounting of the scale sensor head. Or, replace the linear encoder.	–
The count-up direction of the linear encoder does not match the forward direction of the moving coil in the motor.	Check the setting of Pn080 (2080h) = n.□□X□ (Motor Phase Sequence Selection). Check the installation orientation for the linear encoder and moving coil.	Check the setting of Pn080 (2080h) = n.X□□□. Correctly reinstall the linear encoder or moving coil.	188
The polarity sensor signal is being affected by noise.	–	Correct the FG wiring. Implement countermeasures against noise for the polarity sensor wiring.	–
The setting of Pn282 (2282h) (Linear Encoder Scale Pitch) is not correct.	Check the setting of Pn282 (2282h) (Linear Encoder Scale Pitch).	Check the specifications of the linear encoder and set a correct value.	183

◆ C21h:Polarity Sensor Error

Possible Cause	Confirmation	Correction	Reference
The polarity sensor is protruding from the magnetic way of the motor.	Check the polarity sensor.	Correctly reinstall the moving coil or magnetic way of the motor.	–
The polarity sensor is not wired correctly.	Check the wiring of the polarity sensor.	Correct the wiring of the polarity sensor.	–
The polarity sensor failed.	–	Replace the polarity sensor.	–

◆ C22h:Phase Information Disagreement

Possible Cause	Confirmation	Correction	Reference
The SERVOPACK phase information is different from the linear encoder phase information.	–	Perform polarity detection.	192

◆ C50h:Polarity Detection Failure

Possible Cause	Confirmation	Correction	Reference
The parameter settings are not correct.	Check the linear encoder specifications and feedback signal status.	The settings of Pn282 (2282h) (Linear Encoder Scale Pitch) and Pn080 (2080h) = n.□□X□ (Motor Phase Sequence Selection) may not match the installation. Set the parameters to correct values.	183,188
There is noise on the scale signal.	Check to make sure that the frame grounds of the serial converter unit and servomotor are connected to the FG terminal on the SERVOPACK and that the FG terminal on the SERVOPACK is connected to the frame ground on the power supply. And, confirm that the shield is properly processed on the linear encoder cable. Check to see if the detection reference is repeatedly output in one direction.	Implement appropriate countermeasures against noise for the linear encoder cable.	–
An external force was applied to the moving coil of the motor.	–	The polarity cannot be properly detected if the detection reference is 0 and the speed feedback is not 0 because of an external force, such as cable tension, applied to the moving coil. Implement measures to reduce the external force so that the speed feedback goes to 0. If the external force cannot be reduced, increase the setting of Pn481 (2481h) (Polarity Detection Speed Loop Gain).	–
The linear encoder resolution is too low.	Check the linear encoder scale pitch to see if it is within 100 µm.	If the linear encoder scale pitch is 100 µm or higher, the SERVOPACK cannot detect the correct speed feedback. Use a linear encoder scale pitch with higher resolution. (We recommend a pitch of 40 µm or less.) Or, increase the setting of Pn485 (2485h) (Polarity Detection Reference Speed). However, increasing the setting of Pn485 (2485h) will increase the servomotor movement range that is required for polarity detection.	–

◆ C51h:Overtravel Detected during Polarity Detection

Possible Cause	Confirmation	Correction	Reference
The overtravel signal was detected during polarity detection.	Check the overtravel position.	Wire the overtravel signals. Execute polarity detection at a position where an overtravel signal would not be detected.	156

◆ C52h:Polarity Detection Not Completed

Possible Cause	Confirmation	Correction	Reference
The servo was turned ON when using an absolute linear encoder, Pn587 (2587h) was set to n.□□□0 (do not detect polarity), and the polarity had not been detected.	–	When using an absolute linear encoder, set Pn587 (2587h) to n.□□□1 (detect polarity).	–

◆ C53h:Out of Range of Motion for Polarity Detection

Possible Cause	Confirmation	Correction	Reference
The travel distance exceeded the setting of Pn48E (248Eh) (Polarity Detection Range) in the middle of detection.	–	Increase the setting of Pn48E (248Eh) (Polarity Detection Range). Or, increase the setting of Pn481 (2481h) (Polarity Detection Speed Loop Gain).	–

◆ C54h:Polarity Detection Failure 2

Possible Cause	Confirmation	Correction	Reference
An external force was applied to the servomotor.	–	Increase the setting of Pn495 (2495h) (Polarity Detection Confirmation Force Reference). Increase the setting of Pn498 (2498h) (Polarity Detection Allowable Error Range). Increasing the allowable error will also increase the motor temperature.	–

◆ C80h:Encoder Clear Error or Multiturn Limit Setting Error

Possible Cause	Confirmation	Correction	Reference
A failure occurred in the encoder.	–	Turn the power to the SERVOPACK OFF and ON again. If the alarm still occurs, the servomotor or linear encoder may be faulty. Replace the servomotor or linear encoder.	–
A failure occurred in the SERVOPACK.	–	Turn the power to the SERVOPACK OFF and ON again. If the alarm still occurs, the SERVOPACK may be faulty. Replace the SERVOPACK.	–

◆ C90h:Encoder Communications Error

Possible Cause	Confirmation	Correction	Reference
The content saved in the configuration and the content detected in node detection are different when SigmaLINK II was used.	Check the content that was saved with self-configuration and the actual device connections.	If the actual device configuration is correct, execute self-configuration again. If the content that was saved with self-configuration is correct, change the actual device configuration to match the saved content.	545
Self-configuration was executed without connecting the encoder cable to CN2.	Check the content that was saved with self-configuration and the actual device connections.	Execute self-configuration again. Or discard the self-configuration results data.	545
There is a faulty contact in the connector or the connector is not wired correctly for the encoder cable.	Check the condition of the connector for encoder cable.	Reconnect the connector for encoder cable and check the encoder wiring.	143
There is a cable disconnection or short-circuit in the encoder. Or, the cable impedance is outside the specified values.	Check the condition of the encoder cable.	Use the encoder cable within the specified specifications.	–
One of the following has occurred: corrosion caused by improper temperature, humidity, or gas, a short-circuit caused by entry of water drops or cutting oil, or faulty contact in connector caused by vibration.	Check the operating environment.	Improve the operating environment, and replace the cable. If the alarm still occurs, replace the SERVOPACK.	104
A malfunction was caused by noise.	–	Correct the wiring around the encoder by separating the encoder cable from the servomotor main circuit cable or by grounding the encoder.	119
A failure occurred in the SERVOPACK.	–	If the alarm does not occur when the servomotor is connected to a different SERVOPACK and the control power is supplied, the SERVOPACK may be faulty. Replace the SERVOPACK.	–

◆ C91h:Encoder Communications Position Data Acceleration Rate Error

Possible Cause	Confirmation	Correction	Reference
Noise entered on the signal lines because the encoder cable is bent or the sheath is damaged.	Check the condition of the encoder cable and connectors.	Check the encoder cable to see if it is installed correctly.	122
The encoder cable is bundled with a high-current line or installed near a high-current line.	Check the installation condition of the encoder cable.	Confirm that there is no surge voltage on the encoder cable.	–
There is variation in the FG potential because of the influence of machines on the servomotor side, such as a welder.	Check the installation condition of the encoder cable.	Properly ground the machine to separate it from the FG of the encoder.	–

◆ C92h:Encoder Communications Timer Error

Possible Cause	Confirmation	Correction	Reference
Noise entered on the signal line from the encoder.	–	Implement countermeasures against noise for the encoder wiring.	119
Excessive vibration or shock was applied to the encoder.	Check the operating conditions.	Reduce machine vibration. Correctly install the servomotor or linear encoder.	–
A failure occurred in the encoder.	–	Turn the power to the SERVOPACK OFF and ON again. If the alarm still occurs, the servomotor or linear encoder may be faulty. Replace the servomotor or linear encoder.	–
A failure occurred in the SERVOPACK.	–	Turn the power to the SERVOPACK OFF and ON again. If the alarm still occurs, the SERVOPACK may be faulty. Replace the SERVOPACK.	–

◆ CA0h:Encoder Parameter Error

Possible Cause	Confirmation	Correction	Reference
A failure occurred in the encoder.	–	Turn the power to the SERVOPACK OFF and ON again. If the alarm still occurs, the servomotor or linear encoder may be faulty. Replace the servomotor or linear encoder.	–
A failure occurred in the SERVOPACK.	–	Turn the power to the SERVOPACK OFF and ON again. If the alarm still occurs, the SERVOPACK may be faulty. Replace the SERVOPACK.	–

◆ Cb0h:Encoder Echoback Error

Possible Cause	Confirmation	Correction	Reference
The encoder is wired incorrectly or there is faulty contact.	Check the wiring of the encoder.	Make sure that the encoder is correctly wired.	143
The specifications of the encoder cable are not correct and noise entered on it.	–	Use a shielded twisted-pair wire cable or a screened twisted-pair cable with conductors of at least 0.12 mm^2.	–
The encoder cable is too long and noise entered on it.	–	• Rotary Servomotors: The encoder cable wiring distance must be 50 m max. • Linear Servomotors: The encoder cable wiring distance must be 20 m max.	–
There is variation in the FG potential because of the influence of machines on the servomotor side, such as a welder.	Check the condition of the encoder cable and connectors.	Properly ground the machine to separate it from the FG of the encoder.	–
Excessive vibration or shock was applied to the encoder.	Check the operating conditions.	Reduce machine vibration. Correctly install the servomotor or linear encoder.	–
A failure occurred in the encoder.	–	Turn the power to the SERVOPACK OFF and ON again. If the alarm still occurs, the servomotor or linear encoder may be faulty. Replace the servomotor or linear encoder.	–
A failure occurred in the SERVOPACK.	–	Turn the power to the SERVOPACK OFF and ON again. If the alarm still occurs, the SERVOPACK may be faulty. Replace the SERVOPACK.	–

◆ CC0h:Multiturn Limit Disagreement

Possible Cause	Confirmation	Correction	Reference
When using a direct drive servomotor, the setting of Pn205 (2205h) (Multiturn Limit) does not agree with the encoder.	Check the setting of Pn205 (2205h).	Correct the setting of Pn205 (2205h) (0 to 65535).	266
The multiturn limit of the encoder is different from that of the SERVOPACK. Or, the multiturn limit of the SERVOPACK has been changed.	Check the setting of Pn205 (2205h) (Multiturn Limit).	Change the setting if the alarm occurs.	266
A failure occurred in the SERVOPACK.	–	Turn the power to the SERVOPACK OFF and ON again. If the alarm still occurs, the SERVOPACK may be faulty. Replace the SERVOPACK.	–

◆ Cd1h:SigmaLINK II Node Configuration Error

Possible Cause	Confirmation	Correction	Reference
Nodes that are compatible and incompatible with SigmaLINK II are connected.	Check if nodes that are compatible and incompatible with SigmaLINK II are connected.	Make all of the connected nodes either compatible or incompatible with SigmaLINK II.	544
Four or more nodes are connected.	Check the number of connected servomotors, external encoders, and I/O devices.	Connect no more than a total of three servomotors, external encoders, and I/O devices.	544
Two or more servomotors are connected.	Check the number of servomotors that are connected.	Connect one servomotor.	544
Two or more external encoders are connected.	Check the number of external encoders that are connected.	Connect one external encoder.	544

◆ Cd2h:SigmaLINK II Power Supply Short-Circuit Detected

Possible Cause	Confirmation	Correction	Reference
The CN2 power supply is short-circuited.	Check the condition of the encoder cable.	Disconnect the connected node and check if the alarm occurs. If the alarm occurs even when the connected node is disconnected, replace the encoder cable. If the alarm still occurs, replace the connected node or SERVOPACK.	–

◆ Cd3h:SigmaLINK II Configuration Data Checksum Error

Possible Cause	Confirmation	Correction	Reference
Saving the configuration data failed.	–	Execute SigmaLINK II self-configuration again and save the settings.	545
The SigmaLINK II configuration data saved in nonvolatile memory is damaged.	–	Execute SigmaLINK II self-configuration again and save the settings.	545

◆ Cd4h:SigmaLINK II Node Change Detected

Possible Cause	Confirmation	Correction	Reference
The content saved in the configuration and the content detected in node detection are different.	Check the content that was saved with self-configuration and the actual device connections.	If the actual device configuration is correct, execute self-configuration again. If the content that was saved with self-configuration is correct, change the actual device configuration to match the saved content.	545
Detection of the node failed.	–	Execute SigmaLINK II self-configuration again and save the settings.	545

◆ Cd7h:SigmaLINK II I/O Device Communications Error

Possible Cause	Confirmation	Correction	Reference
There is a faulty contact in the connector or the connector is not wired correctly for the encoder cable.	Check the connection and condition of the encoder cable.	• Correctly connect the encoder cable. • Replace the encoder cable.	–
There is a cable disconnection or short-circuit in the encoder. Or, the cable impedance is outside the specified values.	Check the condition of the encoder cable.	Use the encoder cable within the specified specifications.	–
One of the following has occurred: corrosion caused by improper temperature, humidity, or gas, a short-circuit caused by entry of water drops or cutting oil, or faulty contact in connector caused by vibration.	Check the operating environment.	Improve the operating environment, and replace the cable. If the alarm still occurs, replace the SERVOPACK.	104
A malfunction was caused by noise.	–	Correct the wiring around the encoder by separating the encoder cable from the servomotor main circuit cable or by grounding the encoder.	119
A failure occurred in the SERVOPACK.	–	If the alarm does not occur when the I/O device is connected to a different SERVOPACK and the control power is supplied, the SERVOPACK may be faulty. Replace the SERVOPACK.	–

◆ Cd8h:SigmaLINK II I/O Device Status Error

Possible Cause	Confirmation	Correction	Reference
The I/O device detected a warning.	Check the alarm code by reading the I/O device alarm in the SigmaWin+.	Take corrective action according to the I/O device manual.	–

◆ CF1h:Reception Failed Error in External Encoder

Possible Cause	Confirmation	Correction	Reference
The content saved in the configuration and the content detected in node detection are different when SigmaLINK II was used.	Check the content that was saved with self-configuration and the actual device connections.	If the actual device configuration is correct, execute self-configuration again. If the content that was saved with self-configuration is correct, change the actual device configuration to match the saved content.	545
The cable between the serial converter unit and SERVOPACK is not wired correctly or there is a faulty contact.	Check the wiring of the external encoder.	Correctly wire the cable between the serial converter unit and SERVOPACK.	149
A specified cable is not being used between serial converter unit and SERVOPACK.	Check the wiring specifications of the external encoder.	Use a specified cable.	–
The cable between the serial converter unit and SERVOPACK is too long.	Measure the length of the cable that connects the serial converter unit.	The length of the cable between the serial converter unit and SERVOPACK must be 20 m or less.	–
The sheath on cable between the serial converter unit and SERVOPACK is broken.	Check the cable that connects the serial converter unit.	Replace the cable between the serial converter unit and SERVOPACK.	–

◆ CF2h:Timer Stopped Error in External Encoder

Possible Cause	Confirmation	Correction	Reference
Noise entered the cable between the serial converter unit and SERVOPACK.	–	Correct the wiring around the serial converter unit, e.g., separate I/O signal lines from the main circuit cables or ground.	–
A failure occurred in the serial converter unit.	–	Replace the serial converter unit.	–
A failure occurred in the SERVOPACK.	–	Replace the SERVOPACK.	–

◆ d00h:Position Deviation Overflow

Possible Cause	Confirmation	Correction	Reference
The servomotor U, V, and W wiring is not correct.	Check the wiring of the servomotor main circuit cables.	Make sure that there are no faulty contacts in the wiring for the servomotor and encoder.	–
The position reference speed is too fast.	Reduce the position reference speed and try operating the SERVOPACK.	Reduce the position reference speed or the reference acceleration rate, or reconsider the electronic gear ratio.	209
The acceleration of the position reference is too high.	Reduce the reference acceleration and try operating the SERVOPACK.	Reduce the acceleration of the position reference using an EtherCAT command.	–
The setting of Pn520 (2520h) (Position Deviation Overflow Alarm Level) is too low for the operating conditions.	Check the setting of Pn520 (2520h) (Position Deviation Overflow Alarm Level) to see if it is set to an appropriate value.	Optimize the setting of Pn520 (2520h).	339
A failure occurred in the SERVOPACK.	–	Turn the power to the SERVOPACK OFF and ON again. If the alarm still occurs, the SERVOPACK may be faulty. Replace the SERVOPACK.	–

◆ d01h:Position Deviation Overflow Alarm at Servo ON

Possible Cause	Confirmation	Correction	Reference
The servo was turned ON after the position deviation exceeded the setting of Pn526 (2526h) (Position Deviation Overflow Alarm Level at Servo ON) while the servo was OFF.	Check the position deviation while the servo is OFF.	Optimize the setting of Pn526 (2526h) (Position Deviation Overflow Alarm Level at Servo ON).	339

◆ d02h:Position Deviation Overflow Alarm for Speed Limit at Servo ON

Possible Cause	Confirmation	Correction	Reference
If position deviation remains in the deviation counter, the setting of Pn529 (2529h) or Pn584 (2584h) (Speed Limit Level at Servo ON) limits the speed when the servo is turned ON. This alarm occurs if a position reference is input and the setting of Pn520 (2520h) (Position Deviation Overflow Alarm Level) is exceeded.	–	Optimize the setting of Pn520 (2520h). Or, set Pn529 (2529h) or Pn584 (2584h) to an appropriate value.	339

◆ d04h:Overtravel Alarm

Possible Cause	Confirmation	Correction	Reference
Overtravel was detected while the servo was ON.	Check the status of the overtravel signals on the input signal monitor.	• Review the references from the host controller so that the moving parts of the machine do not exceed the overtravel range and software limits. • Check the wiring of the overtravel signals. • Implement countermeasures against noise.	196

◆ d10h:Motor-Load Position Deviation Overflow

Possible Cause	Confirmation	Correction	Reference
The motor direction and external encoder installation orientation are backward.	Check the motor direction and the external encoder installation orientation.	Install the external encoder in the opposite direction, or change the setting of Pn002 (2002h) = n.X□□□ (External Encoder Usage) to reverse the direction.	530
There is an error in the connection between the load (e.g., stage) and external encoder coupling.	Check the coupling of the external encoder.	Check the mechanical coupling.	–

◆ d30h:Position Data Overflow

Possible Cause	Confirmation	Correction	Reference
The position data exceeded ±1879048192.	Check the input reference pulse counter.	Reconsider the operating specifications.	–

◆ E00h:EtherCAT Initialization Timeout Error 1

Possible Cause	Confirmation	Correction	Reference
A failure occurred in the SERVOPACK.	–	Replace the SERVOPACK.	–

◆ E02h:EtherCAT Internal Synchronization Error 1

Possible Cause	Confirmation	Correction	Reference
The EtherCAT transmission cycle fluctuated.	–	Remove the cause of transmission cycle fluctuation at the host controller.	–
A failure occurred in the SERVOPACK.	–	Turn the power to the SERVOPACK OFF and ON again. If the alarm still occurs, the SERVOPACK may be faulty. Replace the SERVOPACK.	–

◆ E71:Safety Module Detection Failure

Possible Cause	Confirmation	Correction	Reference
The connection between the SERVOPACK and the safety module is not appropriate.	Check the connection between the SERVOPACK and the safety module.	Correctly connect the safety module.	–
The safety module was disconnected.	–	Reset the option module configuration error and turn the power OFF and ON again. Use Fn014 or the SigmaWin+ to reset the option module configuration error.	–
The safety module has failed.	–	Replace the safety module.	–
The SERVOPACK has failed.	–	Replace the SERVOPACK.	–

◆ E72h:Feedback Option Module Detection Failure

Possible Cause	Confirmation	Correction	Reference
There is a faulty connection between the SERVOPACK and the feedback option module.	Check the connection between the SERVOPACK and the feedback option module.	Correctly connect the feedback option module.	–
The feedback option module was disconnected.	–	Reset the option module configuration error and turn the power to the SERVOPACK OFF and ON again.	733
A failure occurred in the feedback option module.	–	Replace the feedback option module.	–
A failure occurred in the SERVOPACK.	–	Replace the SERVOPACK.	–

◆ E74h:Unsupported Safety Module

Possible Cause	Confirmation	Correction	Reference
A safety module that is not supported by the SERVOPACK was connected.	• Check the safety module model. • Check the types of safety modules that are not supported by the SERVOPACK.	• Install a safety module that is supported by the SERVOPACK. • Replace the safety module. • Replace the SERVOPACK.	–
An error occurred in the safety module system.	–	Replace the safety module.	–

◆ E75h:Unsupported Feedback Option Module Alarm

Possible Cause	Confirmation	Correction	Reference
A failure occurred in the feedback option module.	–	Replace the feedback option module.	–
An unsupported feedback option module was connected.	Refer to the catalog of the connected feedback option module or the manual of the SERVOPACK.	Connect a compatible feedback option module.	–

◆ E81h:Safety Module Detection Disagreement

Possible Cause	Confirmation	Correction	Reference
A safety module was connected that is a different model than the previous safety module.	Check the safety module model.	• Reset the option module configuration error and turn the power OFF and ON again. Use Fn014 or the SigmaWin+ to reset the option module configuration error. • Install the safety module that was previously connected.	–

◆ EA0h:EtherCAT Initialization Timeout Error 2

Possible Cause	Confirmation	Correction	Reference
A failure occurred in the SERVOPACK.	–	Repair or replace the SERVOPACK.	–

◆ EA2h:EtherCAT Internal Synchronization Error 2

Possible Cause	Confirmation	Correction	Reference
The synchronization timing inside the SERVOPACK fluctuated because the synchronization timing (Sync0) for EtherCAT communications fluctuated.	–	Turn the power OFF and ON again and re-establish communications.	–
A failure occurred in the SERVOPACK.	–	Repair or replace the SERVOPACK.	–

◆ Eb1h:Safety Function Signal Input Timing Error

Possible Cause	Confirmation	Correction	Reference
The delay between activation of the /HWBB1 and /HWBB2 input signals for the HWBB was ten second or longer.	Measure the time delay between the /HWBB1 and /HWBB2 signals.	The output signal circuits or devices for /HWBB1 and /HWBB2 or the SERVOPACK input signal circuits may be faulty. Alternatively, the input signal cables may be disconnected. Check to see if any of these items are faulty or have been disconnected.	–
A failure occurred in the SERVOPACK.	–	Replace the SERVOPACK.	–

◆ EC6h:Safety Module System Error 2

Possible Cause	Confirmation	Correction	Reference
An error occurred in a peripheral circuit of the safety module.	–	• Restart the system. • Replace the safety module. • Replace the SERVOPACK.	–

◆ EC8h:Gate Drive Error 1
EC9h:Gate Drive Error 2

Possible Cause	Confirmation	Correction	Reference
A failure occurred in the SERVOPACK.	–	Turn the power to the SERVOPACK OFF and ON again. If the alarm still occurs, the SERVOPACK may be faulty. Replace the SERVOPACK.	–

◆ F10h:Power Supply Line Open Phase

Possible Cause	Confirmation	Correction	Reference
The three-phase power supply wiring is not correct.	Check the power supply wiring.	Make sure that the power supply is correctly wired.	127
The three-phase power supply is unbalanced.	Measure the voltage for each phase of the three-phase power supply.	Balance the power supply by changing phases.	–
A single-phase AC power supply was input without specifying Pn00B (200Bh) = n.□1□□ (Single-phase AC Power Supply Input).	Check the power supply and the parameter setting.	Match the parameter setting to the power supply.	127
A failure occurred in the SERVOPACK.	–	Turn the power to the SERVOPACK OFF and ON again. If the alarm still occurs, the SERVOPACK may be faulty. Replace the SERVOPACK.	–

◆ FL-1:System Alarm
FL-2:System Alarm
FL-3:System Alarm
FL-4:System Alarm
FL-5:System Alarm
FL-6:System Alarm
FL-7:System Alarm

Possible Cause	Confirmation	Correction	Reference
A failure occurred in the SERVOPACK.	–	Turn the power to the SERVOPACK OFF and ON again. If the alarm still occurs, the SERVOPACK may be faulty. Replace the SERVOPACK.	–

◆ CPF00:Digital Operator Communications Error 1

Possible Cause	Confirmation	Correction	Reference
There is a faulty connection between the digital operator and the SERVOPACK.	Check the connector contact.	Disconnect the connector and insert it again. Or, replace the cable.	–
A malfunction was caused by noise.	–	Keep the digital operator or the cable away from sources of noise.	–
Communications were interrupted when the power was turned OFF and ON again or when a utility function was running.	–	Wait for communications with the digital operator to recover. Or disconnect the connector and insert it again.	–

◆ CPF01:Digital Operator Communications Error 2

Possible Cause	Confirmation	Correction	Reference
A failure occurred in the digital operator.	–	Disconnect the digital operator and then connect it again. If the alarm still occurs, the digital operator may be faulty. Replace the digital operator.	–
A failure occurred in the SERVOPACK.	–	Turn the power to the SERVOPACK OFF and ON again. If the alarm still occurs, the SERVOPACK may be faulty. Replace the SERVOPACK.	–
A malfunction was caused by noise.	–	Keep the digital operator or the cable away from sources of noise.	–
Communications were interrupted when the power was turned OFF and ON again or when a utility function was running.	–	Wait for communications with the digital operator to recover. Or disconnect the connector and insert it again.	–

16.2.3 Alarm Reset

If there is an ALM (Servo Alarm Output) signal, use one of the following methods to reset the alarm after eliminating the cause of the alarm.

> **Important**
> Be sure to eliminate the cause of an alarm before you reset the alarm.
> If you reset the alarm and continue operation without eliminating the cause of the alarm, it may result in damage to the equipment or fire.

(1) Resetting Alarms with the SigmaWin+

Use the following procedure to reset alarms with the SigmaWin+.

1. **Click the [ ] button for the servo drive in the workspace of the Main Window of the SigmaWin+.**

   The [Menu] window will be displayed.

2. **Click [Display Alarm] in the [Troubleshooting] area.**

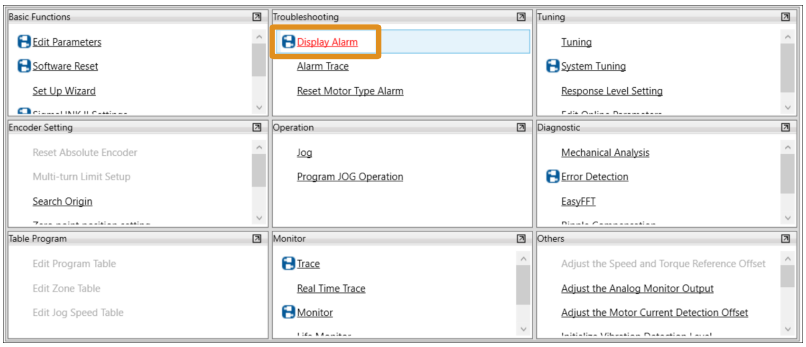

   The [Alarm Display] window will be displayed.

3. **Click the [Reset axes] button.**

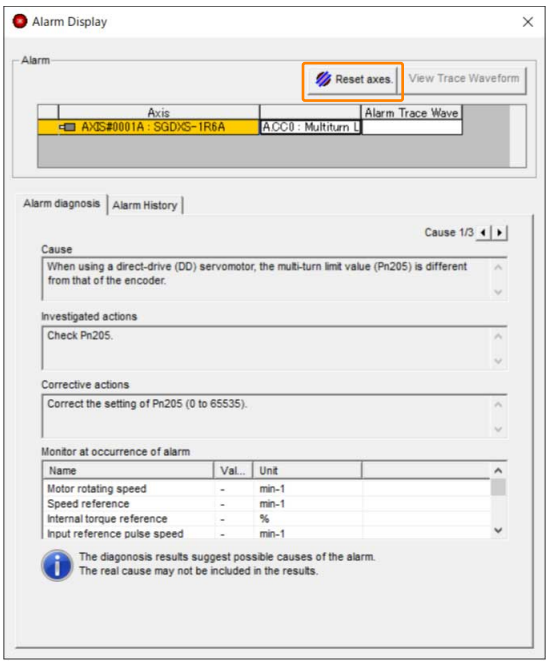

   The alarm will be reset, and the alarm display will be cleared.

This concludes the procedure to reset alarms.

(2) Clearing Alarms and Warnings with the Fault Reset Command

Execute the Fault Reset command to clear alarms or warnings.

Refer to the following section for details on the Fault Reset command.

☞ *(1) Controlword Bits on page 661*

(3) Resetting Alarms Using the Digital Operator

Press the [ALARM RESET] key on the digital operator. Refer to the following manual for details on resetting alarms.

📖 Σ-7/Σ-X-Series Digital Operator Operating Manual (Manual No.: SIEP S800001 33)

16.2.4 Displaying the Alarm History

The alarm history displays up to the last ten alarms that have occurred in the SERVOPACK.

Note:

The following alarms are not displayed in the alarm history: A.E50 (EtherCAT Synchronization Error), A.E60 (Reception Error in EtherCAT Communications), and FL-1 to FL-7.

(1) Preparations

No preparations are required.

(2) Applicable Tools

The following table lists the tools that you can use to display the alarm history.

Tool	Fn No./Function Name	Reference
Digital Operator	Fn000	📖 Σ-7/Σ-X-Series Digital Operator Operating Manual (Manual No.: SIEP S800001 33)
SigmaWin+	[Troubleshooting] – [Display Alarm]	☞ *(3) Operating Procedure on page 731*

(3) Operating Procedure

Use the following procedure to display the alarm history.

1. **Click the [ ] button for the servo drive in the workspace of the Main Window of the SigmaWin+.**

   The [Menu] window will be displayed.

2. **Click [Display Alarm] in the [Troubleshooting] area.**

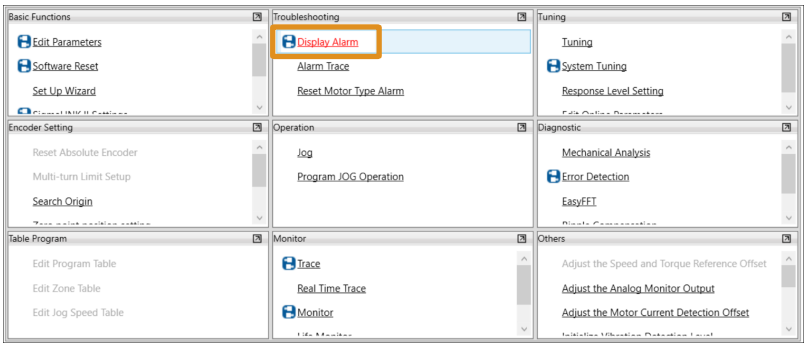

   The [Alarm Display] window will be displayed.

3. **Click the [Alarm History] tab.**

   The following window will appear and you can check the alarms that occurred in the past.

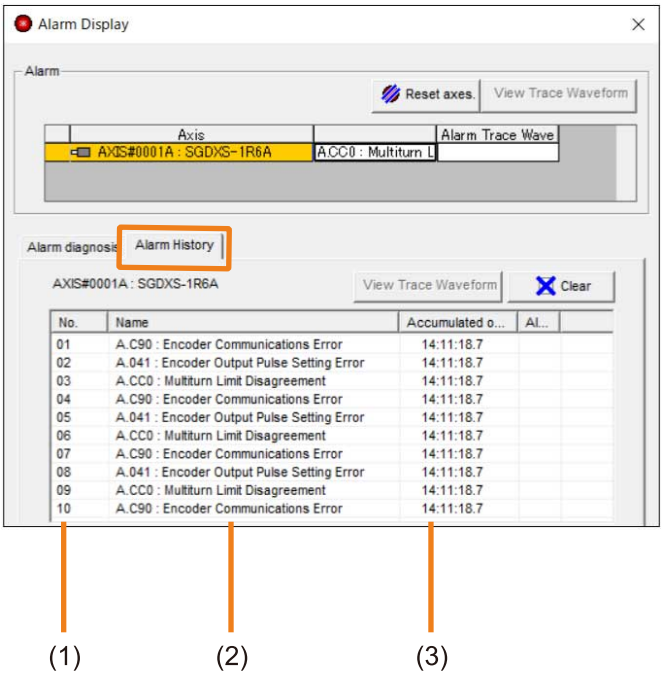

Code	Item	Meaning
(1)	No.	Alarms in order of occurrence (Older alarms have higher numbers.)
(2)	Name	Alarm number, alarm name
(3)	Accumulated operation time	Total operation time to the point at which the alarm occurred is displayed in increments of 100 ms from when the control power and main circuit power turned ON. For 24-hour, 365-day operation, measurements are possible for approximately 13 years.

Information
- If the same alarm occurs consecutively within one hour, it is not saved in the alarm history. If it occurs after an hour or more, it is saved.
- You can clear the alarm history by clicking the [Clear] button. The alarm history is not cleared when alarms are reset or when the SERVOPACK main circuit power is turned OFF.

This concludes the procedure to display the alarm history.

16.2.5 Clearing the Alarm History

You can clear the alarm history that is recorded in the SERVOPACK.

The alarm history is not cleared when alarms are reset or when the SERVOPACK main circuit power is turned OFF. You must perform the following procedure.

(1) Preparations

Always check the following before you clear the alarm history.

- The parameters must not be write prohibited.

(2) Applicable Tools

The following table lists the tools that you can use to clear the alarm history.

Tool	Fn No./Function Name	Reference
Digital Operator	Fn006	Σ-7/Σ-X-Series Digital Operator Operating Manual (Manual No.: SIEP S800001 33)
SigmaWin+	[Troubleshooting] – [Display Alarm]	*(3) Operating Procedure on page 733*

(3) Operating Procedure

Use the following procedure to clear the alarm history.

1. **Click the [ ] button for the servo drive in the workspace of the Main Window of the SigmaWin+.**

   The [Menu] window will be displayed.

2. **Click [Display Alarm] in the [Troubleshooting] area.**

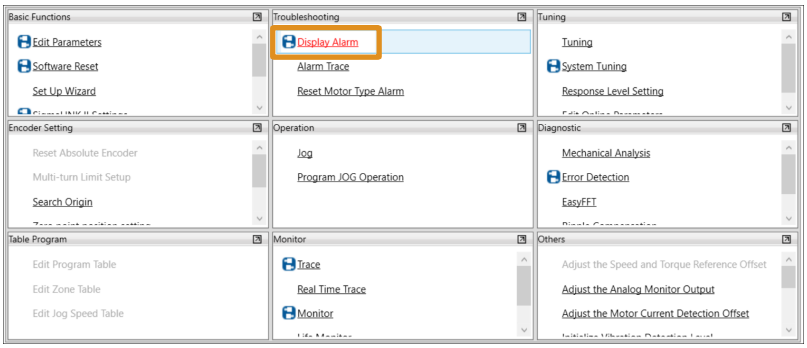

   The [Alarm Display] window will be displayed.

3. **Click the [Alarm History] tab.**

4. **Click the [Clear] button.**

   The alarm history will be cleared.

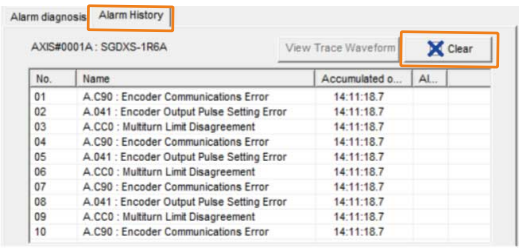

This concludes the procedure to clear the alarm history.

16.2.6 Resetting Option Module Configuration Error

If any option modules are attached to the SERVOPACK, the SERVOPACK detects the presence and models of the connected option modules. If it finds any errors, it outputs alarms.

You can delete those alarms with this operation.

Information This operation is the only way to reset alarms for option modules. The alarms are not reset when you reset other alarms or when you turn OFF the power to the SERVOPACK.

Always remove the cause of an alarm before you reset the alarm.

(1) Preparations

Always check the following before you clear an alarm detected in an option module.

- The parameters must not be write prohibited.

(2) Applicable Tools

The following table lists the tools that you can use to reset option module configuration errors.

Tool	Fn No./Function Name	Reference
Digital Operator	Fn014	Σ-7/Σ-X-Series Digital Operator Operating Manual (Manual No.: SIEP S800001 33)
SigmaWin+	[Troubleshooting] – [Display Alarm]	*(3) Operating Procedure on page 734*

(3) Operating Procedure

Use the following procedure to reset alarms detected in option modules.

1. **Click the [ ] button for the servo drive in the workspace of the Main Window of the SigmaWin+.**

   The [Menu] window will be displayed.

2. **Click [Display Alarm] in the [Troubleshooting] area.**

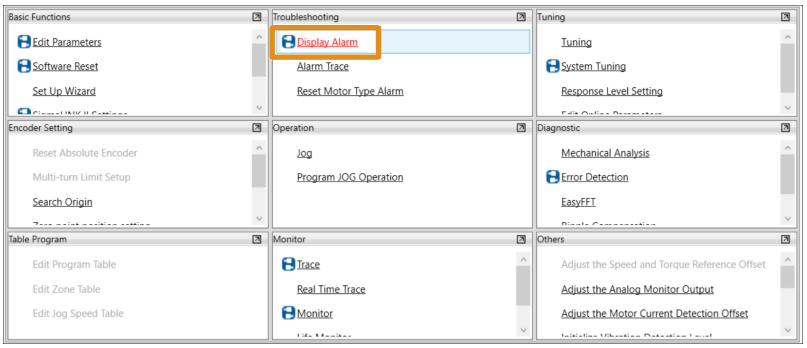

   The [Alarm Display] window will be displayed.

3. **Click the [Reset axes] button.**

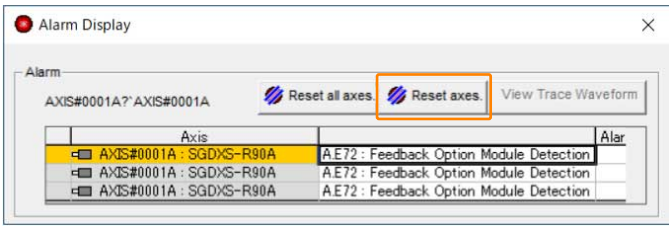

   The [Reset Option Module Configuration Error] window will be displayed.

4. **Select the [Clear] check box for the option module for which to reset the alarm and then click the [Execute] button.**

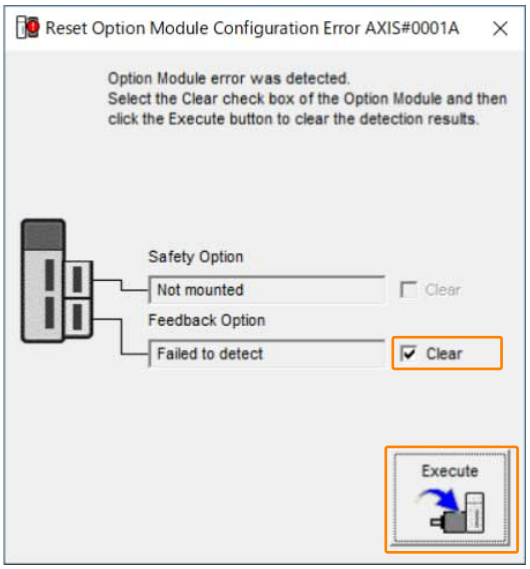

5. **Read the precaution and then click the [OK] button.**

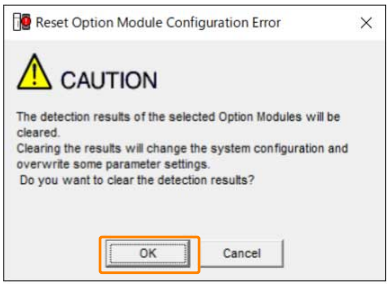

6. **Read the precaution and then click the [OK] button.**

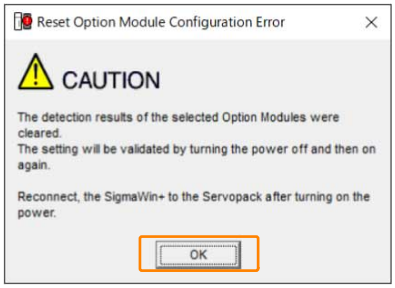

7. **Turn the power to the SERVOPACK OFF and ON again.**

This concludes the procedure to reset alarms detected in option modules.

16.2.7 Resetting Motor Type Alarms

The SERVOPACK automatically determines the type of servomotor that is connected to it. If the type of servomotor that is connected is changed, A.070 alarm (Motor Type Change Detected) will occur the next time the SERVOPACK is started. If an A.070 alarm occurs, you must set the parameters to match the new type of servomotor.

An A.070 alarm is reset by executing the Reset Motor Type Alarm utility function.

Information
- This utility function is the only way to reset an A.070 alarm (Motor Type Change Detected). The errors are not reset when you reset alarms or turn OFF the power to the SERVOPACK.
- If an A.070 alarm occurs, first set the parameters according to the newly connected servomotor type and then execute the Reset Motor Type Alarm utility function.

(1) Preparations

Always check the following before you reset a motor type alarm.

- The parameters must not be write prohibited.

(2) Applicable Tools

The following table lists the tools that you can use to reset the motor type alarms.

Tool	Fn No./Function Name	Reference
Digital Operator	Fn021	Σ-7/Σ-X-Series Digital Operator Operating Manual (Manual No.: SIEP S800001 33)
SigmaWin+	[Troubleshooting] - [Reset Motor Type Alarm]	*(3) Operating Procedure on page 735*

(3) Operating Procedure

Use the following procedure to reset motor type alarm.

1. **Click the [ ] button for the servo drive in the workspace of the Main Window of the SigmaWin+.**

2. **Click the [Reset Motor Type Alarm] in the [Menu] window.**

   The [Reset Motor Type Alarm] window will be displayed.

3. **Click the [Reset] button.**

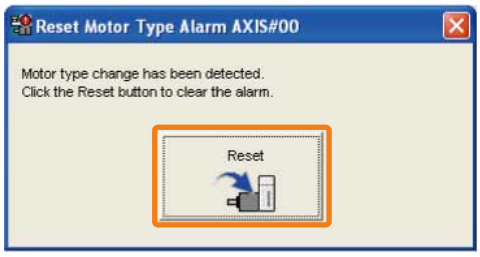

4. **Read the precaution and then click the [OK] button.**

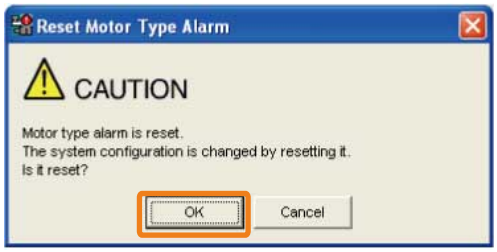

5. **Read the precaution and then click the [OK] button.**

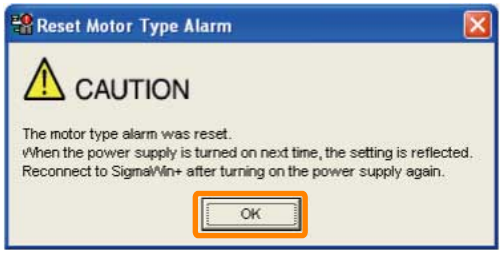

6. **Turn the power to the SERVOPACK OFF and ON again.**

This concludes the procedure to reset motor type alarms.

16.3 Warning Displays

To check a warning that occurs in the SERVOPACK, use one of the following methods. Warnings are displayed to warn you before an alarm occurs.

Panel display on SERVOPACK	If there is a warning, the code will be displayed one character at a time, as shown below. Example: Alarm A.910 Status Display → Not lit. → A. → Not lit. → 9 → Not lit. → 1 → Not lit. → 0 → Not lit.
Digital Operator	The warning code is displayed.
Statusword (6041h)	Bit 7 (Warning) in the Statusword will change to 1. (Bit 7 is 0 during normal operation.)
Error code (603Fh)	A current warning code is stored in object 603Fh.
Emergency message	The controller is notified of any warning that occurs. (Notification may not be possible if EtherCAT communications are unstable.)

If a warning occurs, eliminate the cause and then reset it with the SigmaWin+. Refer to the following section for the reset procedure.

☞ *(1) Resetting Alarms with the SigmaWin+ on page 730*

This section provides a list of warnings and the causes of and corrections for warnings.

16.3.1 Warnings Table

The list of warnings gives the warning name and warning meaning in order of the warning numbers.

Note:

A.9C□ alarms are detected when the advanced safety module is connected to the SERVOPACK. For details, refer to the following manual.

📖 Σ-X-Series AC Servo Drive Advanced Safety Module with Safety over EtherCAT (FSoE) Communications References Product Manual (Manual No.: SIEP C710812 25)

📖 Σ-X-Series AC Servo Drive Advanced Safety Module Digital I/O Product Manual (Manual No.: SIEP C710812 26)

Note:

Use Pn008 = n.□X□□ (Warning Detection Selection) to control warning detection. However, the following warnings are not affected by the setting of Pn008 = n.□X□□ and other parameter settings are required in addition to Pn008 = n.□X□□.

Warning Number	Parameters That Must Be Set to Select Warning Detection	Reference
911h	Pn310 (2310h) = n.□□□X (Vibration Detection Selection)	276
923h	– (Not affected by the setting of Pn008 (2008h) = n.□X□□.)	–
930h	Pn008 (2008h) = n.□□□X (Low Battery Voltage Alarm/Warning Selection)	695
932h	Pn0DD (20DDh) = n.□□□X (SigmaLINK II I/O Device Communications Check Mask)	565
933h	Pn0DD (20DDh) = n.□X□□ (SigmaLINK II I/O Device Status Check Mask)	565
971h	Pn008 (2008h) = n.□□X□ (Function Selection for Undervoltage) (Not affected by the setting of Pn008 (2008h) = n.□X□□.)	245
9A0h	Pn00D (200Dh) = n.X□□□ (Overtravel Warning Detection Selection) (Not affected by the setting of Pn008 (2008h) = n.□X□□.)	197
9b0h	Pn00F (200Fh) = n.□□□X (SERVOPACK Preventative Maintenance Warning Selection)	515
9b1h	Pn00F (200Fh) = n.□□X□ (Servomotor Preventative Maintenance Warning Selection)	

Warning Number	Warning Name	Warning Meaning
900h	Position Deviation Overflow	The position deviation exceeded the percentage set with the following formula: (Pn520 (2520h) × Pn51E (251Eh)/100)
901h	Position Deviation Overflow Alarm at Servo ON	The position deviation when the servo was turned ON exceeded the percentage set with the following formula: (Pn526 (2526h) × Pn528 (2528h)/100)
905h	Error Detection Warning	An error was detected in error detection.
910h	Overload	This warning occurs before an A.710 or A.720 alarm (overload) occurs. If the warning is ignored and operation is continued, an alarm may occur.
911h	Vibration	Abnormal vibration was detected during motor operation. The detection level is the same as A.520. Set whether to output an alarm or a warning by setting Pn310 (2310h) (Vibration Detection Selections).
912h	Internal Temperature Warning 1 (Control Board Temperature Error)	The surrounding temperature of the control board is abnormal.
913h	Internal Temperature Warning 2 (Power Board Temperature Error)	The surrounding temperature of the power board is abnormal.
920h	Regenerative Overload	This warning occurs before an A.320 alarm (Regenerative Overload) occurs. If the warning is ignored and operation is continued, an alarm may occur.
923h	SERVOPACK Built- Fan Stopped	The fan inside the SERVOPACK stopped.
930h	Absolute Encoder Battery Error	This warning occurs when the voltage of absolute encoder's battery is low.
932h	SigmaLINK II I/O Device Communications Warning	An error occurred in communications with the SigmaLINK II I/O device.
933h	SigmaLINK II I/O Device Status Warning	The SigmaLINK II I/O device detected an error.
93bh	Overheat Warning	The input voltage (temperature) of the overheat protection input (TH) signal exceeded the setting of Pn61C (261Ch) (Overheat Warning Level).
942h	Speed Ripple Compensation Information Disagreement	The speed ripple compensation information stored in the encoder does not agree with the speed ripple compensation information stored in the SERVOPACK.
971h	Undervoltage	This warning occurs before an A.410 alarm (Undervoltage) occurs. If the warning is ignored and operation is continued, an alarm may occur.
9A0h	Overtravel	Overtravel was detected while the servo was ON.
9b0h	SERVOPACK Preventative Maintenance Warning	One of the consumable parts of the SERVOPACK has reached the end of its service life.
9b1h	Servomotor Preventative Maintenance Warning	One of the consumable parts of the servomotor has reached the time when maintenance is needed.

16.3.2 Troubleshooting Warnings

The causes of and corrections for the warnings are given in the following table. Contact your Yaskawa representative if you cannot solve a problem with the correction given in the table.

◆ 900h:Position Deviation Overflow

Possible Cause	Confirmation	Correction	Reference
The servomotor U, V, and W wiring is not correct.	Check the wiring of the servomotor main circuit cables.	Make sure that there are no faulty contacts in the wiring for the servomotor and encoder.	–
A SERVOPACK gain is too low.	Check the SERVOPACK gains.	Increase the servo gain, e.g., by using autotuning without a host reference.	369
The acceleration of the position reference is too high.	Reduce the reference acceleration and try operating the SERVOPACK.	Reduce the acceleration of the position reference using an EtherCAT command.	–
The excessive position deviation alarm level (Pn520 (2520h) × Pn51E (251Eh) /100) is too low for the operating conditions.	Check excessive position deviation alarm level (Pn520 (2520h) × Pn51E (251Eh) /100) to see if it is set to an appropriate value.	Optimize the setting of Pn520 (2520h) and Pn51E (251Eh).	339
A failure occurred in the SERVOPACK.	–	Turn the power to the SERVOPACK OFF and ON again. If the alarm still occurs, the SERVOPACK may be faulty. Replace the SERVOPACK.	–

◆ 901h:Position Deviation Overflow Alarm at Servo ON

Possible Cause	Confirmation	Correction	Reference
The position deviation when the servo was turned ON exceeded the percentage set with the following formula: (Pn526 (2526h) × Pn528 (2528h)/100)	–	Optimize the setting of Pn528 (2528h) (Position Deviation Overflow Warning Level at Servo ON).	–

◆ 905h:Error Detection Warning

Possible Cause	Confirmation	Correction	Reference
A behavior was detected that differs greatly from the sample data in error detection tracing.	Check the error detection tracing waveform and error rate.	Check if an error has occurred on the equipment. Reconsider Pn5C4 (Error Detection Sample Data Set 1 Warning Level 1) and Pn5C5 (Error Detection Sample Data Set 1 Judgment Level 1).	–
The correct sample data is not saved.	Check if the SigmaWin+ is Ver. 7.42 or higher.	First upgrade to the SigmaWin+ Ver. 7.42 or higher, and then create the sample data again.	518

◆ 910h:Overload

Possible Cause	Confirmation	Correction	Reference
The wiring is not correct or there is a faulty connection in the motor or encoder wiring.	Check the wiring.	Make sure that the servomotor and encoder are correctly wired.	–
Operation was performed that exceeded the overload protection characteristics.	Check the motor overload characteristics and operation reference.	Reconsider the load and operating conditions. Or, increase the motor capacity.	–
An excessive load was applied during operation because the servomotor was not driven due to mechanical problems.	Check the operation reference and motor speed.	Remove the mechanical problem.	–
The setting of Pn52B (252Bh) (Overload Warning Level) is not suitable.	Check that the setting of Pn52B (252Bh) (Overload Warning Level) is suitable.	Set Pn52B (252Bh) (Overload Warning Level) to an appropriate value.	207
A failure occurred in the SERVOPACK.	–	The SERVOPACK may be faulty. Replace the SERVOPACK.	–

◆ 911h:Vibration

Possible Cause	Confirmation	Correction	Reference
Abnormal vibration was detected during motor operation.	Check for abnormal motor noise, and check the speed and torque waveforms during operation.	Reduce the motor speed. Or, reduce the servo gain with custom tuning.	402
The setting of Pn103 (2103h) (Moment of Inertia Ratio) is greater than the actual moment of inertia or was greatly changed.	Check the moment of inertia ratio or mass ratio.	Set Pn103 (2103h) (Moment of Inertia Ratio) to an appropriate value.	348
The setting of Pn312 (2312h) or Pn384 (2384h) (Vibration Detection Level) is not suitable.	Check that the setting of Pn312 (2312h) or Pn384 (2384h) (Vibration Detection Level) is suitable.	Set Pn312 (2312h) or Pn384 (2384h) (Vibration Detection Level) to an appropriate value.	276

◆ 912h:Internal Temperature Warning 1 (Control Board Temperature Error) 913h:Internal Temperature Warning 2 (Power Board Temperature Error)

Possible Cause	Confirmation	Correction	Reference
The surrounding temperature is too high.	Check the surrounding temperature using a thermometer. Or, check the operating status with the SERVOPACK installation environment monitor.	Decrease the surrounding temperature by improving the SERVOPACK installation conditions.	108
An overload alarm was reset by turning OFF the power too many times.	Check the alarm display to see if there is an overload alarm.	Change the method for resetting the alarm.	–
There was an excessive load or operation was performed that exceeded the regenerative processing capacity.	Check the load during operation with [Cumulative Load] and check the regenerative capacity with [Regenerative Load] on the operation monitor of the SigmaWin+.	Reconsider the load and operating conditions.	–
The SERVOPACK installation orientation is not correct or there is insufficient space around the SERVOPACK.	Check the SERVOPACK installation conditions.	Install the SERVOPACK according to specifications.	105, 107
A failure occurred in the SERVOPACK.	–	The SERVOPACK may be faulty. Replace the SERVOPACK.	–

◆ 920h:Regenerative Overload

Possible Cause	Confirmation	Correction	Reference
The power supply voltage exceeded the specified range.	Measure the power supply voltage.	Set the power supply voltage within the specified range.	–
There is insufficient external regenerative resistance, regenerative resistor capacity, or SERVOPACK capacity, or there has been a continuous regeneration state.	Check the operating conditions or the capacity.	Change the regenerative resistance value, regenerative resistance capacity, or SERVOPACK capacity. Reconsider the operating conditions.	–
There was a continuous regeneration state because a negative load was continuously applied.	Check the load applied to the servomotor during operation.	Reconsider the system including the servo, machine, and operating conditions.	–

◆ 923h:SERVOPACK Built- Fan Stopped

Possible Cause	Confirmation	Correction	Reference
The fan inside the SERVOPACK stopped.	Check for foreign matter inside the SERVOPACK.	Remove foreign matter from the SERVOPACK. If the alarm still occurs, the SERVOPACK may be faulty. Replace the SERVOPACK.	–

◆ 930h:Absolute Encoder Battery Error

Possible Cause	Confirmation	Correction	Reference
The battery connection is faulty or a battery is not connected.	Check the battery connection.	Correct the battery connection.	144
The battery voltage is lower than the specified value (2.7 V).	Measure the battery voltage.	Replace the battery.	695
A failure occurred in the SERVOPACK.	–	The SERVOPACK may be faulty. Replace the SERVOPACK.	–

◆ 932h:SigmaLINK II I/O Device Communications Warning

Possible Cause	Confirmation	Correction	Reference
There is a faulty contact in the connector or the connector is not wired correctly for the encoder cable.	Check the condition of the encoder cable.	Replace the encoder cable.	–
There is a cable disconnection or short-circuit in the encoder. Or, the cable impedance is outside the specified values.	Check the condition of the encoder cable.	Use the encoder cable within the specified specifications.	–
One of the following has occurred: corrosion caused by improper temperature, humidity, or gas, a short-circuit caused by entry of water drops or cutting oil, or faulty contact in connector caused by vibration.	Check the operating environment.	Improve the operating environment, and replace the cable. If the alarm still occurs, replace the SERVOPACK.	–
A malfunction was caused by noise.	–	Correct the wiring around the encoder by separating the encoder cable from the servomotor main circuit cable or by grounding the encoder.	–
A failure occurred in the SERVOPACK.	–	If the alarm does not occur when the I/O device is connected to a different SERVOPACK and the control power is supplied, the SERVOPACK may be faulty. Replace the SERVOPACK.	–

◆ 933h:SigmaLINK II I/O Device Status Warning

Possible Cause	Confirmation	Correction	Reference
The I/O device detected a warning.	Check the alarm code by reading the I/O device alarm in the SigmaWin+.	Take corrective action according to the I/O device manual.	–

◆ 93bh:Overheat Warning

Possible Cause	Confirmation	Correction	Reference
The surrounding temperature is too high.	Check the surrounding temperature using a thermometer.	Lower the surrounding temperature by improving the installation conditions of the linear servomotor or the machine.	–
Operation was performed under an excessive load.	Check the load with the [Cumulative Load] on the operation monitor of the SigmaWin+.	Reconsider the load and operating conditions.	–
A failure occurred in the SERVOPACK.	–	The SERVOPACK may be faulty. Replace the SERVOPACK.	–
The temperature detection circuit in the linear servomotor is faulty or the sensor attached to the machine is faulty.	–	The temperature detection circuit in the linear servomotor may be faulty or the sensor attached to the machine may be faulty. Replace the linear servomotor or repair the sensor attached to the machine.	–

◆ 942h:Speed Ripple Compensation Information Disagreement

Possible Cause	Confirmation	Correction	Reference
The speed ripple compensation information stored in the encoder does not agree with the speed ripple compensation information stored in the SERVOPACK.	–	Reset the speed ripple compensation value on the SigmaWin+.	421
The speed ripple compensation information stored in the encoder does not agree with the speed ripple compensation information stored in the SERVOPACK.	–	Set Pn423 to n.□□□2 (execute speed ripple compensation using the default adjustment value). However, changing this setting may increase the speed ripple when using a Sigma-X rotary servomotor.	421
The speed ripple compensation information stored in the encoder does not agree with the speed ripple compensation information stored in the SERVOPACK.	–	Set Pn423 to n.□□1□ (do not detect A.942 alarms) . However, changing this setting may increase the speed ripple.	421
The speed ripple compensation information stored in the encoder does not agree with the speed ripple compensation information stored in the SERVOPACK.	–	Set Pn423 to n.□□□0 (disable speed ripple compensation). However, changing this setting may increase the speed ripple.	421

◆ 971h:Undervoltage

Possible Cause	Confirmation	Correction	Reference
For a 200-V SERVOPACK, the AC power supply voltage dropped below 140 V.	Measure the power supply voltage.	Set the power supply voltage within the specified range.	–
The power supply voltage dropped during operation.	Measure the power supply voltage.	Increase the power supply capacity.	–
A momentary power interruption occurred.	Measure the power supply voltage.	If you have changed the setting of Pn509 (2509h) (Momentary Power Interruption Hold Time), decrease the setting.	244
The SERVOPACK fuse is blown out.	–	Replace the SERVOPACK and connect a reactor.	141
A failure occurred in the SERVOPACK.	–	The SERVOPACK may be faulty. Replace the SERVOPACK.	–

◆ 9A0h:Overtravel

Possible Cause	Confirmation	Correction	Reference
Overtravel was detected while the servo was ON.	Check the status of the overtravel signals on the input signal monitor.	Even if an overtravel signal is not shown by the input signal monitor, momentary overtravel may have been detected. Take the following precautions. • Do not specify movements that would cause overtravel from the host controller. • Check the wiring of the overtravel signals. • Implement countermeasures against noise.	197

◆ 9b0h:SERVOPACK Preventative Maintenance Warning

Possible Cause	Confirmation	Correction	Reference
One of the consumable parts of the SERVOPACK has reached the end of its service life.	–	Replace the part. Contact your Yaskawa representative for replacement.	515

◆ 9b1h:Servomotor Preventative Maintenance Warning

Possible Cause	Confirmation	Correction	Reference
One of the consumable parts of the servomotor has reached the time when maintenance is needed.	–	Replace the part. Contact your Yaskawa representative for replacement.	515

16.4 Troubleshooting Based on the Operation and Conditions of the Servomotor

This section provides troubleshooting based on the operation and conditions of the servomotor, including causes and corrections.

16.4.1 Servomotor Does Not Start

Possible Cause	Confirmation	Correction	Reference
The control power is not turned ON.	Measure the voltage between control power supply terminals.	Turn OFF the power to the servo system. Correct the wiring so that the control power is turned ON.	–
The main circuit power is not turned ON.	Measure the voltage between the main circuit power input terminals.	Turn OFF the power to the servo system. Correct the wiring so that the main circuit power is turned ON.	–
The I/O signal connector (CN1) pins are not wired correctly or are disconnected.	Turn OFF the power to the servo system. Check the wiring condition of the I/O signal connector (CN1) pins.	Correct the wiring of the I/O signal connector (CN1) pins.	153,504
The wiring servomotor main circuit cables or encoder cable is disconnected.	Check the wiring conditions.	Turn OFF the power to the servo system. Wire the cable correctly.	–
There is an overload on the servomotor.	Operate the servomotor with no load and check the load status.	Turn OFF the power to the servo system. Reduce the load or replace the servomotor with a servomotor with a larger capacity.	–
The type of encoder that is being used does not agree with the setting of Pn002 (2002h) = n.□X□□ (Encoder Usage).	Check the type of the encoder that is being used and the setting of Pn002 (2002h) = n.□X□□.	Set Pn002 (2002h) = n.□X□□ according to the type of the encoder that is being used.	261
There is a mistake in the input signal allocations.	Check the allocations of the input signals. • Pn50A (250Ah), Pn50B (250Bh), Pn511 (2511h), Pn516 (2516h) or • Pn50A (250Ah), Pn590 (2590h) to Pn599 (2599h)	Correctly allocate the input signals.	232,504
The Servo ON command (Enable Operation command) was not sent.	Make sure the Servo ON command (Enable Operation command) is set to “Operation enabled”.	Set the correct value for the Servo ON command (Enable Operation command).	–
The torque limit reference is too small.	Check the torque limit reference.	Increase the torque limit reference.	–
The Operation Mode is not set.	Check if the Operation Mode (6060h) is set correctly.	Set the Operation Mode (6060h) correctly.	–
A software limit is active.	Check to see if the target position exceeds a software limit.	Specify a target position that is within the software limits.	–
EtherCAT communications are not established.	Check to see if the EtherCAT indicator shows the Operational state.	Place the EtherCAT communications in the Operational state.	–
The P-OT (Forward Drive Prohibit Input) or N-OT (Reverse Drive Prohibit Input) signal is still OFF.	Check the P-OT and N-OT signals.	Turn ON the P-OT and N-OT signals.	504
The safety input signals (/HWBB1 or /HWBB2) are still OFF.	Check the /HWBB1 and /HWBB2 input signals.	Turn ON the /HWBB1 and /HWBB2 input signals. If you are not using the safety function, connect the safety jumper connector (provided as an accessory) to CN8.	504
		Validate the safety functions.	578

Continued on next page.

Continued from previous page.

Possible Cause	Confirmation	Correction	Reference
The FSTP (Forced Stop Input) signal is still OFF.	Check the FSTP signal.	• Turn ON the FSTP signal. • If you will not use the function to force the motor to stop, set Pn516 (2516h) = n.□□□X (FSTP (Forced Stop Input) Signal Allocation) to disable the signal.	504
A failure occurred in the SERVOPACK.	–	Turn OFF the power to the servo system. Replace the SERVOPACK.	–
The polarity detection was not executed.	Check the setting of Pn080 (2080h) = n.□□□X (Polarity Sensor Selection).	Correct the parameter setting.	190
	Check the inputs to the Servo ON command (Enable Operation command).	• If you are using an incremental linear encoder, send the Servo ON command (Enable Operation command) from the host controller. • If you are using an absolute linear encoder, execute polarity detection.	191

16.4.2 Servomotor Moves Instantaneously, and Then Stops

Possible Cause	Confirmation	Correction	Reference
There is a mistake in the servomotor wiring.	Turn OFF the power to the servo system. Check the wiring.	Wire the cable correctly.	–
There is a mistake in the wiring of the encoder or serial converter unit.	Turn OFF the power to the servo system. Check the wiring.	Wire the cable correctly.	–
There is a mistake in the linear encoder wiring.	Turn OFF the power to the servo system. Check the wiring.	Wire the cable correctly.	–
The setting of Pn282 (2282h) (Linear Encoder Scale Pitch) is not correct.	Check the setting of Pn282 (2282h).	Correct the setting of Pn282 (2282h).	183
The count-up direction of the linear encoder does not match the forward direction of the moving coil in the motor.	Check the directions.	Change the setting of Pn080 (2080h) = n.□□X□ (Motor Phase Sequence Selection). Place the linear encoder and motor in the same direction.	188
Polarity detection was not performed correctly.	Check to see if electrical angle 2 (electrical angle from polarity origin) at any position is between ±10°.	Correct the settings for the polarity detection-related parameters.	–

16.4.3 Servomotor Speed Is Unstable

Possible Cause	Confirmation	Correction	Reference
There is a faulty connection in the servomotor wiring.	The connector connections for the power line (U, V, and W phases) and the encoder or serial converter unit may be unstable. Turn OFF the power to the servo system. Check the wiring.	Tighten any loose terminals or connectors and correct the wiring.	–

16.4.4 Servomotor Moves without a Reference Input

Possible Cause	Confirmation	Correction	Reference
A failure occurred in the SERVOPACK.	–	Turn OFF the power to the servo system. Replace the SERVOPACK.	–
The count-up direction of the linear encoder does not match the forward direction of the moving coil in the motor.	Check the directions.	Change the setting of Pn080 (2080h) = n.□□X□ (Motor Phase Sequence Selection). Match the linear encoder direction and servomotor direction.	188
Polarity detection was not performed correctly.	Check to see if electrical angle 2 (electrical angle from polarity origin) at any position is between ±10°.	Correct the settings for the polarity detection-related parameters.	–

16.4.5 Dynamic Brake Does Not Operate

Possible Cause	Confirmation	Correction	Reference
The setting of Pn001 (2001h) = n.□□□X (Motor Stopping Method for Servo OFF and Group 1 Alarms) is not suitable.	Check the setting of Pn001 (2001h) = n.□□□X.	Correct the setting of Pn001 (2001h) = n.□□□X.	–
The dynamic brake resistor is disconnected.	Check the moment of inertia, motor speed, and dynamic brake frequency of use. If the moment of inertia, motor speed, or dynamic brake frequency of use is excessive, the dynamic brake resistor may be disconnected.	Turn OFF the power to the servo system. Replace the SERVOPACK. To prevent disconnection, reduce the load.	–
There was a failure in the dynamic brake drive circuit.	–	There is a defective component in the dynamic brake circuit. Turn OFF the power to the servo system. Replace the SERVOPACK.	–

16.4.6 Abnormal Noise from Servomotor

Possible Cause	Confirmation	Correction	Reference
The servomotor vibrated considerably while performing the tuning-less function with the default settings.	Check the waveform of the motor speed.	Reduce the load so that the load moment of inertia ratio or mass ratio is within the allowable value, or increase the load level or reduce the response level in the tuning-less level settings. If the situation is not improved, set Pn170 (2170h) = n.□□□0 (disable the tuning-less function) and execute auto-tuning either with or without a host reference.	343
The machine mounting is not secure.	Turn OFF the power to the servo system. Check the servomotor installation.	Tighten the mounting screws.	–
	Turn OFF the power to the servo system. Check to see if there is misalignment in the coupling.	Align the coupling.	–
	Turn OFF the power to the servo system. Check to see if the coupling is balanced.	Balance the coupling.	–

Continued on next page.

Continued from previous page.

Possible Cause	Confirmation	Correction	Reference
The bearings are defective.	Turn OFF the power to the servo system. Check for noise and vibration around the bearings.	Replace the servomotor.	–
There is a vibration source at the driven machine.	Turn OFF the power to the servo system. Check for any foreign matter, damage, or deformation in the machine's moving parts.	Consult with the machine manufacturer.	–
Noise interference occurred because of incorrect I/O signal cable specifications.	Turn OFF the power to the servo system. Check the I/O signal cables to see if they satisfy specifications. Use a shielded twisted-pair wire cable or a screened twisted-pair cable with conductors of at least 0.12 mm^2.	Use cables that satisfy the specifications.	–
Noise interference occurred because an I/O signal cable is too long.	Turn OFF the power to the servo system. Check the lengths of the I/O signal cables.	The I/O signal cables must be no longer than 3 m.	–
Noise interference occurred because of incorrect encoder cable specifications.	Turn OFF the power to the servo system. Check the encoder cable to see if it satisfies specifications. Use a shielded twisted-pair wire cable or a screened twisted-pair cable with conductors of at least 0.12 mm^2.	Use cables that satisfy the specifications.	–
Noise interference occurred because the encoder cable is too long.	Turn OFF the power to the servo system. Check the length of the encoder cable.	• Rotary servomotors: The encoder cable length must be 50 m max. • Linear servomotors: Make sure that the serial converter unit cable is no longer than 20 m and that the linear encoder cable and the sensor cable are no longer than 15 m each.	–
Noise interference occurred because the encoder cable is damaged.	Turn OFF the power to the servo system. Check the encoder cable to see if it is pinched or the sheath is damaged.	Replace the encoder cable and correct the cable installation environment.	–
The encoder cable was subjected to excessive noise interference.	Turn OFF the power to the servo system. Check to see if the encoder cable is bundled with a power line or installed near a power line.	Correct the cable layout so that no surge is applied by power line.	–
There is variation in the FG potential because of the influence of machines on the servomotor side, such as a welder.	Turn OFF the power to the servo system. Check to see if the machines are correctly grounded.	Properly ground the machines to separate them from the FG of the encoder.	–
There is a SERVOPACK pulse counting error due to noise.	Check to see if there is noise interference on the signal line from the encoder.	Turn OFF the power to the servo system. Implement countermeasures against noise for the encoder wiring.	–
The encoder was subjected to excessive vibration or shock.	Turn OFF the power to the servo system. Check to see if vibration from the machine occurred. Check the servomotor installation (mounting surface precision, securing state, and alignment). Check the linear encoder installation (mounting surface precision and securing method).	Reduce machine vibration. Improve the mounting state of the servomotor or linear encoder.	–
A failure occurred in the encoder.	–	Turn OFF the power to the servo system. Replace the servomotor.	–
A failure occurred in the serial converter unit.	–	Turn OFF the power to the servo system. Replace the serial converter unit.	–
A failure occurred in the linear encoder.	–	Turn OFF the power to the servo system. Replace the linear encoder.	–

16.4.7 Servomotor Vibrates at Frequency of Approx. 200 to 400 Hz.

Possible Cause	Confirmation	Correction	Reference
The servo gains are not balanced.	Check to see if the servo gains have been correctly tuned.	Perform autotuning without a host reference.	369
The setting of Pn100 (2100h) (Speed Loop Gain) is too high.	Check the setting of Pn100 (2100h) (Speed Loop Gain). The default setting is Kv = 40.0 Hz.	Set Pn100 (2100h) (Speed Loop Gain) to an appropriate value.	–
The setting of Pn102 (2102h) (Position Loop Gain) is too high.	Check the setting of Pn102 (2102h) (Position Loop Gain). The default setting is Kp = 40.0/s.	Set Pn102 (2102h) (Position Loop Gain) to an appropriate value.	–
The setting of Pn101 (2101h) (Speed Loop Integral Time Constant) is not appropriate.	Check the setting of Pn101 (2101h) (Speed Loop Integral Time Constant). The default setting is Ti = 20.0 ms.	Set Pn101 (2101h) (Speed Loop Integral Time Constant) to an appropriate value.	–
The setting of Pn103 (2103h) (Moment of Inertia Ratio) is not appropriate.	Check the setting of Pn103 (2103h) (Moment of Inertia Ratio).	Set Pn103 (2103h) (Moment of Inertia Ratio) to an appropriate value.	–

16.4.8 Large Motor Speed on Starting and Stopping

Possible Cause	Confirmation	Correction	Reference
The servo gains are not balanced.	Check to see if the servo gains have been correctly tuned.	Perform autotuning without a host reference.	369
The setting of Pn100 (2100h) (Speed Loop Gain) is too high.	Check the setting of Pn100 (2100h) (Speed Loop Gain). The default setting is Kv = 40.0 Hz.	Set Pn100 (2100h) (Speed Loop Gain) to an appropriate value.	–
The setting of Pn102 (2102h) (Position Loop Gain) is too high.	Check the setting of Pn102 (2102h) (Position Loop Gain). The default setting is Kp = 40.0/s.	Set Pn102 (2102h) (Position Loop Gain) to an appropriate value.	–
The setting of Pn101 (2101h) (Speed Loop Integral Time Constant) is not appropriate.	Check the setting of Pn101 (2101h) (Speed Loop Integral Time Constant). The default setting is Ti = 20.0 ms.	Set Pn101 (2101h) (Speed Loop Integral Time Constant) to an appropriate value.	–
The setting of Pn103 (2103h) (Moment of Inertia Ratio) is not appropriate.	Check the setting of Pn103 (2103h) (Moment of Inertia Ratio).	Set Pn103 (2103h) (Moment of Inertia Ratio) to an appropriate value.	–
The torque reference is saturated.	Check the waveform of the torque reference.	Use the mode switching.	–
Pn483 (2483h) (Forward Force Limit) and Pn484 (2484h) (Reverse Force Limit) are set to the default values.	Force limits: Default settings Pn483 (2483h) = 30% Pn484 (2484h) = 30%	Set Pn483 (2483h) (Forward Force Limit) and Pn484 (2484h) (Reverse Force Limit) to appropriate values.	256

16.4.9 Absolute Encoder Position Deviation Error (The position that was saved in the host controller when the power was turned OFF is different from the position when the power was next turned ON.)

Possible Cause	Confirmation	Correction	Reference
Noise interference occurred because of incorrect encoder cable specifications.	Turn OFF the power to the servo system. Check the encoder cable to see if it satisfies specifications. Use a shielded twisted-pair wire cable or a screened twisted-pair cable with conductors of at least 0.12 mm^2.	Use cables that satisfy the specifications.	–
Noise interference occurred because the encoder cable is too long.	Turn OFF the power to the servo system. Check the length of the encoder cable.	• Rotary servomotors: The encoder cable length must be 50 m max. • Linear servomotors: Make sure that the serial converter unit cable is no longer than 20 m and that the linear encoder cable and the sensor cable are no longer than 15 m each.	–
Noise interference occurred because the encoder cable is damaged.	Turn OFF the power to the servo system. Check the encoder cable to see if it is pinched or the sheath is damaged.	Replace the encoder cable and correct the cable installation environment.	–
The encoder cable was subjected to excessive noise interference.	Turn OFF the power to the servo system. Check to see if the encoder cable is bundled with a power line or installed near a power line.	Correct the cable layout so that no surge is applied by power line.	–
There is variation in the FG potential because of the influence of machines on the servomotor side, such as a welder.	Turn OFF the power to the servo system. Check to see if the machines are correctly grounded.	Properly ground the machines to separate them from the FG of the encoder.	–
There is a SERVOPACK pulse counting error due to noise.	Turn OFF the power to the servo system. Check to see if there is noise interference on the signal line from the encoder or serial converter unit.	Implement countermeasures against noise for the encoder or serial converter unit wiring.	–
The encoder was subjected to excessive vibration or shock.	Turn OFF the power to the servo system. Check to see if vibration from the machine occurred. Check the servomotor installation (mounting surface precision, securing state, and alignment). Check the linear encoder installation (mounting surface precision and securing method).	Reduce machine vibration. Improve the mounting state of the servomotor or linear encoder.	–
A failure occurred in the encoder.	–	Turn OFF the power to the servo system. Replace the servomotor or linear encoder.	–
A failure occurred in the SERVOPACK.	–	Turn OFF the power to the servo system. Replace the SERVOPACK.	–
Host controller multiturn data or absolute encoder position data reading error	Check the error detection section of the host controller.	Correct the error detection section of the host controller.	–
	Check to see if the host controller is executing data parity checks.	Perform parity checks for the multiturn data or absolute encoder position data.	–
	Check for noise interference in the cable between the SERVOPACK and the host controller.	Implement countermeasures against noise and then perform parity checks again for the multiturn data or absolute encoder position data.	–

16.4.10 Overtravel Occurred

Possible Cause	Confirmation	Correction	Reference
The P-OT/N-OT (Forward Drive Prohibit Input or Reverse Drive Prohibit Input) signal was input.	Check the external power supply (+24 V) voltage for the input signals.	Correct the external power supply (+24 V) voltage for the input signals.	–
	Check the operating condition of the overtravel limit switches.	Make sure that the overtravel limit switches operate correctly.	–
	Check the wiring of the overtravel limit switches.	Correct the wiring of the overtravel limit switches.	194
	Check the settings of the overtravel input signal allocation (Pn50A (250Ah)/ Pn50B (250Bh) or Pn590 (2590h)/ Pn50B (250Bh)).	Set the parameters to correct values.	194
The P-OT/N-OT (Forward Drive Prohibit Input or Reverse Drive Prohibit Input) signal malfunctioned.	Check for fluctuation in the external power supply (+24 V) voltage for the input signals.	Eliminate fluctuation from the external power supply (+24 V) voltage for the input signals.	–
	Check to see if the operation of the overtravel limit switches is unstable.	Stabilize the operating condition of the overtravel limit switches.	–
	Check the wiring of the overtravel limit switches (e.g., check for cable damage and loose screws).	Correct the wiring of the overtravel limit switches.	–
There is a mistake in the allocation of the P-OT/N-OT (Forward Drive Prohibit Input or Reverse Drive Prohibit Input).	Check if the SERVOPACK is configured in one of the following ways: • Pn50A (250Ah) = n.□□□1 (use Sigma-7S-compatible I/O signal allocations) and the P-OT signal is allocated to CN1 with Pn50A (250Ah) = n.X□□□. • Pn50A (250Ah) = n.□□□2 (use SigmaLINK II input signal allocation) and the P-OT signal is allocated to CN1 with Pn590 (2590h).	Set the parameters to correct values.	194
	Check if the SERVOPACK is configured in one of the following ways: • Pn50A (250Ah) = n.□□□1 (use Sigma-7S-compatible I/O signal allocations) and the N-OT signal is allocated to CN1 with Pn50B (250Bh) = n.□□□X. • Pn50A (250Ah) = n.□□□2 (use SigmaLINK II input signal allocation) and the N-OT signal is allocated to CN1 with Pn591 (2591h).	Set the parameters to correct values.	
The selection of the servomotor stopping method is not correct.	Check the servo OFF stopping method set in Pn001 (2001h) = n.□□□X or Pn001 (2001h) = n.□□X□.	Select a servomotor stopping method other than coasting to a stop.	195
	Check the torque control stopping method set in Pn001 (2001h) = n.□□□X or Pn001 (2001h) = n.□□X□.	Select a servomotor stopping method other than coasting to a stop.	

16.4.11 Improper Stop Position for Overtravel (OT) Signal

Possible Cause	Confirmation	Correction	Reference
The limit switch position and dog length are not appropriate.	–	Install the limit switch at the appropriate position.	–
The overtravel limit switch position is too close for the coasting distance.	–	Install the overtravel limit switch at the appropriate position.	–

16.4.12 Position Deviation (without Alarm)

Possible Cause	Confirmation	Correction	Reference
Noise interference occurred because of incorrect encoder cable specifications.	Turn OFF the power to the servo system. Check the encoder cable to see if it satisfies specifications. Use a shielded twisted-pair wire cable or a screened twisted-pair cable with conductors of at least 0.12 mm^2.	Use cables that satisfy the specifications.	–
Noise interference occurred because the encoder cable is too long.	Turn OFF the power to the servo system. Check the length of the encoder cable.	• Rotary servomotors: The encoder cable length must be 50 m max. • Linear servomotors: Make sure that the serial converter unit cable is no longer than 20 m and that the linear encoder cable and the sensor cable are no longer than 15 m each.	–
Noise interference occurred because the encoder cable is damaged.	Turn OFF the power to the servo system. Check the encoder cable to see if it is pinched or the sheath is damaged.	Replace the encoder cable and correct the cable installation environment.	–
The encoder cable was subjected to excessive noise interference.	Turn OFF the power to the servo system. Check to see if the encoder cable is bundled with a power line or installed near a power line.	Correct the cable layout so that no surge is applied by power line.	–
There is variation in the FG potential because of the influence of machines on the servomotor side, such as a welder.	Turn OFF the power to the servo system. Check to see if the machines are correctly grounded.	Properly ground the machines to separate them from the FG of the encoder.	–
There is a SERVOPACK pulse counting error due to noise.	Turn OFF the power to the servo system. Check to see if there is noise interference on the signal line from the encoder or serial converter unit.	Implement countermeasures against noise for the encoder wiring or serial converter unit wiring.	–
The encoder was subjected to excessive vibration or shock.	Turn OFF the power to the servo system. Check to see if vibration from the machine occurred. Check the servomotor installation (mounting surface precision, securing state, and alignment). Check the linear encoder installation (mounting surface precision and securing method).	Reduce machine vibration. Improve the mounting state of the servomotor or linear encoder.	–
The coupling between the machine and servomotor not suitable.	Turn OFF the power to the servo system. Check to see if position offset occurs at the coupling between machine and servomotor.	Correctly secure the coupling between the machine and servomotor.	–
Noise interference occurred because of incorrect I/O signal cable specifications.	Turn OFF the power to the servo system. Check the I/O signal cables to see if they satisfy specifications. Use a shielded twisted-pair wire cable or a screened twisted-pair cable with conductors of at least 0.12 mm^2.	Use cables that satisfy the specifications.	–
Noise interference occurred because an I/O signal cable is too long.	Turn OFF the power to the servo system. Check the lengths of the I/O signal cables.	The I/O signal cables must be no longer than 3 m.	–
An encoder fault occurred. (The pulse count does not change.)	–	Turn OFF the power to the servo system. Replace the servomotor or linear encoder.	–
A failure occurred in the SERVOPACK.	–	Turn OFF the power to the servo system. Replace the SERVOPACK.	–

16.4.13 Servomotor Overheated

Possible Cause	Confirmation	Correction	Reference
The surrounding temperature is too high.	Measure the surrounding temperature around the servomotor.	Reduce the surrounding temperature to 40°C or less.	–
The surface of the servomotor is dirty.	Turn OFF the power to the servo system. Visually check the surface for dirt.	Clean dirt, dust, and oil from the surface.	–
There is an overload on the servomotor.	Check the load status with a monitor.	If the servomotor is overloaded, reduce the load or replace the servo drive with a SERVOPACK and servomotor with larger capacities.	–
Polarity detection was not performed correctly.	Check to see if electrical angle 2 (electrical angle from polarity origin) at any position is between ±10°.	Correct the settings for the polarity detection-related parameters.	–

17

Parameter and Object Lists

This chapter provides information on parameters and objects.

17.1 Parameter Lists 754

17.1.1 Interpreting the Parameter Lists 754

17.1.2 List of Parameters 755

17.2 Object List 824

17.3 SDO Abort Code List 843

17.4 Parameter Recording Table 844

17.1 Parameter Lists

17.1.1 Interpreting the Parameter Lists

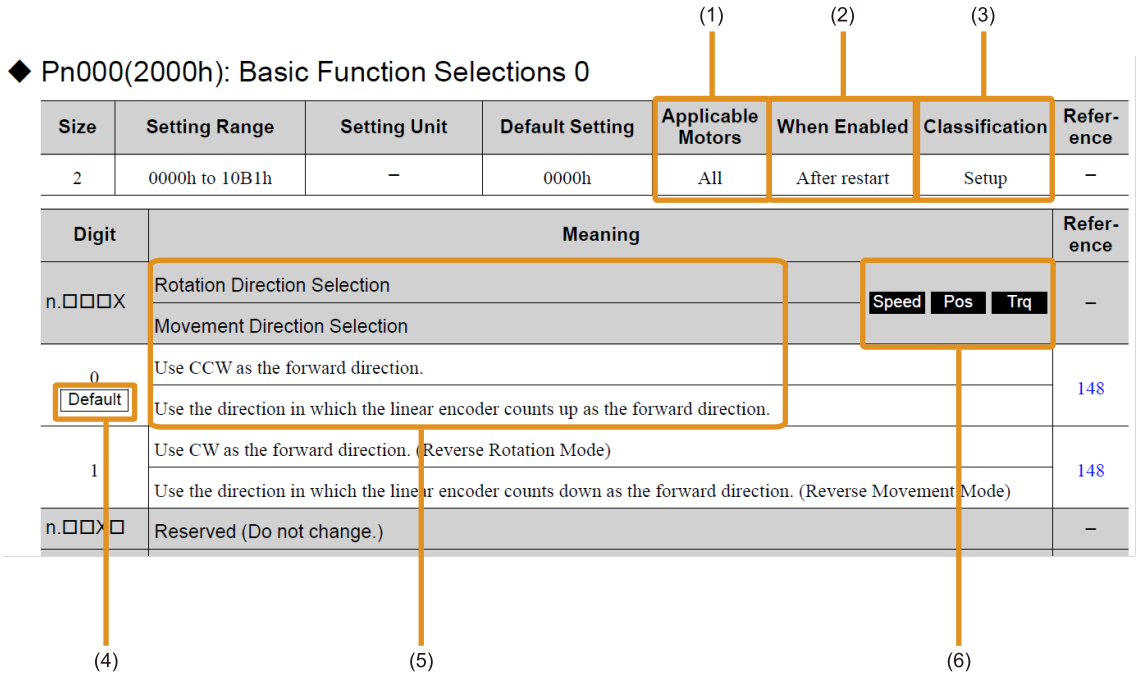

No.	Item	Meaning
(1)	Applicable Motors	Indicates the types of servomotors to which the parameter applies. • All: The parameter is used for both rotary servomotors and linear servomotors. • Rotary: The parameter is used for only rotary servomotors. • Linear: The parameter is used for only linear servomotors. If this item differs by digit, it is added to the digit table. Rotary servomotor terms are used for parameters that are applicable to all servomotors. If you are using a linear servomotor, you need to interpret the terms accordingly. Refer to the following sections for details. ☞ *i.5.2 Differences in Terms for Rotary Servomotors and Linear Servomotors on page 32*
(2)	When Enabled	Indicates when a change to the parameter will be effective. “After restart” indicates parameters that will be effective after one of the following is executed. • The power is turned OFF and ON again. • A software reset is executed. If this item differs by digit, it is added to the digit table.
(3)	Classification	There are the following two classifications. • Setup • Tuning Refer to the following sections for details. ☞ *5.1.1 Classifications of SERVOPACK Parameters on page 170*
(4)	Default Setting	The default setting.

Continued on next page.

Continued from previous page.

No.	Item	Meaning
(5)	Digit Name	If there are differences in the parameters for rotary servomotor and linear servomotor, information is provided for both. • Top row: For rotary servomotors • Bottom row: For linear servomotors
(6)	Control Mode	Speed: A parameter that can be used in speed control. Pos: A parameter that can be used in position control. Trq: A parameter that can be used in torque control. "Torque" is used even for linear servomotor parameters. Grayed-out icons (Speed, Speed, Speed) indicate parameters that cannot be used in the corresponding control method. For parameters for numeric settings, this item is added next to the parameter name. For parameters for selecting functions, this item is added to each digit in the table.

17.1.2 List of Parameters

The following table lists the parameters.

Note:

Do not change the following parameters from their default settings.

• Reserved parameters

• Parameters not given in this manual

• Parameters that are not valid for the servomotor that you are using, as given in the parameter table

◆ Pn000(2000h): Basic Function Selections 0

Size	Setting Range	Setting Unit	Default Setting	Applicable Motors	When Enabled	Classification	Reference
2	0000h to 10B1h	–	0000h	All	After restart	Setup	–

Digit	Meaning		Reference
n.□□□X	Rotation Direction Selection Movement Direction Selection	Speed Pos Trq	–
0 Default	Use CCW as the forward direction. Use the direction in which the linear encoder counts up as the forward direction.		181
1	Use CW as the forward direction. (Reverse Rotation Mode) Use the direction in which the linear encoder counts down as the forward direction. (Reverse Movement Mode)		181
n.□□X□	Reserved (Do not change.)		–
n.□X□□	Reserved (Do not change.)		–
n.X□□□	Rotary/Linear Servomotor Startup Selection When Encoder Is Not Connected	Speed Pos Trq	–
0 Default	When an encoder is not connected, start as SERVOPACK for rotary servomotor.		180
1	When an encoder is not connected, start as SERVOPACK for linear servomotor.		180

◆ Pn001(2001h): Application Function Selections 1

Size	Setting Range	Setting Unit	Default Setting	Applicable Motors	When Enabled	Classification	Reference
2	0000h to 1142h	–	0000h	All	After restart	Setup	–

Digit	Meaning	Reference
n.□□□X	Motor Stopping Method for Servo OFF and Group 1 Alarms Speed Pos Trq	–
0 Default	Stop the motor by applying the dynamic brake.	204
1	Stop the motor by the applying dynamic brake and then release the dynamic brake.	204
2	Coast the motor to a stop without the dynamic brake.	204
n.□□X□	Overtravel Stopping Method Speed Pos Trq	–
0 Default	Apply the dynamic brake or coast the motor to a stop.	195
1	Decelerate the motor to a stop using the torque set in Pn406 (2406h) as the maximum torque and then servo-lock the motor.	195
2	Decelerate the motor to a stop using the torque set in Pn406 (2406h) as the maximum torque and then let the motor coast.	195
3	Decelerate the motor to a stop using the deceleration time set in Pn30A (230Ah) and then servo-lock the motor.	195
4	Decelerate the motor to a stop using the deceleration time set in Pn30A (230Ah) and then let the motor coast.	195
n.□X□□	Main Circuit Power Supply AC/DC Input Selection Speed Pos Trq	–
0 Default	Input AC power as the main circuit power supply using the L1, L2, and L3 terminals (do not use shared converter).	178
1	Input DC as the main circuit power supply using the B1/⊕, ⊖2 terminals or the B1 and ⊖2 terminals (use an external converter or the shared converter).	178
n.X□□□	Reserved (Do not change.)	–

◆ Pn002(2002h): Application Function Selections 2

Size	Setting Range	Setting Unit	Default Setting	Applicable Motors	When Enabled	Classification	Reference
2	0000h to 4213h	–	0011h	–	After restart	Setup	–

Digit	Meaning	Applicable Motors	Reference
n.□□□X	EtherCAT Module Torque Limit Command Usage Selection Speed Pos Trq	–	–
0	Reserved (Do not use.)	All	–
1 Default	Enable torque limit commands from EtherCAT.	All	–
2	Reserved (Do not use.)	All	–
3	Reserved (Do not use.)	All	–
n.□□X□	EtherCAT Module Speed Limit Command Usage Selection Speed Pos Trq	–	–
0	Disable speed limit commands from EtherCAT during torque control.	All	–
1 Default	Enable speed limit commands (Max Profile Velocity (607Fh)) from EtherCAT during torque control.	All	–
n.□X□□	Encoder Usage Speed Pos Trq	–	–
0 Default	Use the encoder according to encoder specifications.	All	261
1	Use the encoder as an incremental encoder.	All	261
2	Use the encoder as a single-turn absolute encoder.	Rotary	261
n.X□□□	External Encoder Usage Speed Pos Trq	–	–
0 Default	Do not use an external encoder.	Rotary	530
1	The external encoder moves in the forward direction for CCW motor rotation.	Rotary	530
2	Reserved (Do not use.)	Rotary	530
3	The external encoder moves in the reverse direction for CCW motor rotation.	Rotary	530
4	Reserved (Do not use.)	Rotary	530

◆ Pn006(2006h): Application Function Selections 6

Size	Setting Range	Setting Unit	Default Setting	Applicable Motors	When Enabled	Classification	Reference
2	0000h to 105Fh	–	0002h	All	Immediately	Setup	509

Digit	Meaning
n.□□XX	Analog Monitor 1 Signal Selection Speed Pos Trq
00	Motor speed (1 V/1000 min^{-1})
	Motor speed (1 V/1000 mm/s)
01	Speed reference (1 V/1000 min^{-1})
	Speed reference (1 V/1000 mm/s)
02 Default	Torque reference (1 V/100% rated torque)
	Force reference (1 V/100% rated force)
03	Position deviation (0.05 V/reference unit)
04	Position amplifier deviation (after electronic gear) (0.05 V/encoder pulse unit)
	Position amplifier deviation (after electronic gear) (0.05 V/linear encoder pulse unit)
05	Position reference speed (1 V/1000 min^{-1})
	Position reference speed (1 V/1000 mm/s)
06	Reserved (Do not use.)
07	Position deviation between motor and load (0.01 V/reference unit)
08	Positioning completion (positioning completed: 5 V, positioning not completed: 0 V)
09	Speed feedforward (1 V/1000 min^{-1})
	Speed feedforward (1 V/1000 mm/s)
0A	Torque feedforward (1 V/100% rated torque)
	Force feedforward (1 V/100% rated force)
0B	Active gain (gain 1: 1 V, gain 2: 2 V, gain 3: 3 V, gain 4: 4 V)
0C	Completion of position reference distribution (completed: 5 V, not completed: 0 V)
0D	External encoder speed (1 V/1000 min^{-1}: value at the motor shaft)
0E	Reserved (Do not use.)
0F	Reserved (Do not use.)
10	Main circuit DC voltage
11 to 12	Reserved (Do not use.)
13	Position deviation after position reference filter (0.05 V/reference unit)
14 to 5F	Reserved (Do not use.)
n.□X□□	Reserved (Do not change.)
n.X□□□	Reserved (Do not change.)

◆ Pn007(2007h): Application Function Selections 7

Size	Setting Range	Setting Unit	Default Setting	Applicable Motors	When Enabled	Classification	Reference
2	0000h to 105Fh	–	0000h	All	Immediately	Setup	509

Digit	Meaning
n.□□XX	Analog Monitor 2 Signal Selection Speed Pos Trq
00 Default	Motor speed (1 V/1000 min^{-1})
	Motor speed (1 V/1000 mm/s)
01	Speed reference (1 V/1000 min^{-1})
	Speed reference (1 V/1000 mm/s)
02	Torque reference (1 V/100% rated torque)
	Force reference (1 V/100% rated force)
03	Position deviation (0.05 V/reference unit)
04	Position amplifier deviation (after electronic gear) (0.05 V/encoder pulse unit)
	Position amplifier deviation (after electronic gear) (0.05 V/linear encoder pulse unit)
05	Position reference speed (1 V/1000 min^{-1})
	Position reference speed (1 V/1000 mm/s)
06	Reserved (Do not use.)
07	Position deviation between motor and load (0.01 V/reference unit)
08	Positioning completion (positioning completed: 5 V, positioning not completed: 0 V)
09	Speed feedforward (1 V/1000 min^{-1})
	Speed feedforward (1 V/1000 mm/s)
0A	Torque feedforward (1 V/100% rated torque)
	Force feedforward (1 V/100% rated force)
0B	Active gain (gain 1: 1 V, gain 2: 2 V, gain 3: 3 V, gain 4: 4 V)
0C	Completion of position reference distribution (completed: 5 V, not completed: 0 V)
0D	External encoder speed (1 V/1000 min^{-1}: value at the motor shaft)
0E	Reserved (Do not use.)
0F	Reserved (Do not use.)
10	Main circuit DC voltage
11 to 5F	Reserved (Do not use.)
n.□X□□	Reserved (Do not change.)
n.X□□□	Reserved (Do not change.)

◆ Pn008(2008h): Application Function Selections 8

Size	Setting Range	Setting Unit	Default Setting	Applicable Motors	When Enabled	Classification	Reference
2	0000h to 7121h	–	4000h	Rotary	After restart	Setup	–

Digit	Meaning	Reference
n.□□□X	Low Battery Voltage Alarm/Warning Selection Speed Pos Trq	–
0 Default	Output alarm (A.830) for low battery voltage.	696
1	Output warning (A.930) for low battery voltage.	696
n.□□X□	Function Selection for Undervoltage Speed Pos Trq	–
0 Default	Do not detect undervoltage.	245
1	Detect undervoltage warning and limit torque at host controller.	245
2	Detect undervoltage warning and limit torque with Pn424 (2424h) and Pn425 (2425h) (i.e., only in SERVOPACK).	245
n.□X□□	Warning Detection Selection Speed Pos Trq	–
0 Default	Detect warnings.	737
1	Do not detect warnings except for A.971.	737
n.X□□□	Reserved (Do not change.)	–

◆ Pn009(2009h): Application Function Selections 9

Size	Setting Range	Setting Unit	Default Setting	Applicable Motors	When Enabled	Classification	Reference
2	0000h to 0141h	–	0040h	All	After restart	Tuning	–

Digit	Meaning	Reference
n.□□□X	Reserved (Do not change.)	–
n.□□X□	Current Control Mode Selection Speed Pos Trq	–
0	Use current control mode 1.	464
1	• SERVOPACK Models SGDXS-R70A to -7R6A and -1R9D: Use current control mode 1. • SERVOPACK Models SGDXS-120A to -780A and -3R5D to -370D: Use current control mode 2. (For noise reduction when the motor is stopped)	464
2	Use current control mode 2. (For noise reduction when the motor is stopped)	464
3	Use current control mode 3. (For noise reduction when the motor is operating at high speed)	464
4 Default	Use current control mode 4. (For noise reduction when the motor is stopped and operating at high speed)	464
n.□X□□	Speed Detection Method Selection Speed Pos Trq	–
0 Default	Use speed detection 1.	464
1	Use speed detection 2.	464
n.X□□□	Reserved (Do not change.)	–

◆ Pn00A(200Ah): Application Function Selections A

Size	Setting Range	Setting Unit	Default Setting	Applicable Motors	When Enabled	Classification	Reference
2	0000h to 1244h	–	0001h	All	After restart	Setup	–

Digit	Meaning	Reference
n.□□□X	Motor Stopping Method for Group 2 Alarms Speed Pos Trq	–
0	Apply the dynamic brake or coast the motor to a stop (use the stopping method set in Pn001 (2001h) = n.□□□X).	205
1 Default	Decelerate the motor to a stop using the torque set in Pn406 (2406h) as the maximum torque. Use the setting of Pn001 (2001h) = n.□□□X for the status after stopping.	205
2	Decelerate the motor to a stop using the torque set in Pn406 (2406h) as the maximum torque and then let the motor coast.	205
3	Decelerate the motor to a stop using the deceleration time set in Pn30A (230Ah). Use the setting of Pn001 (2001h) = n.□□□X for the status after stopping.	205
4	Decelerate the motor to a stop using the deceleration time set in Pn30A (230Ah) and then let the motor coast.	205
n.□□X□	Stopping Method for Forced Stops Speed Pos Trq	–
0 Default	Apply the dynamic brake or coast the motor to a stop (use the stopping method set in Pn001 (2001h) = n.□□□X).	283
1	Decelerate the motor to a stop using the torque set in Pn406 (2406h) as the maximum torque. Use the setting of Pn001 (2001h) = n.□□□X for the status after stopping.	283
2	Decelerate the motor to a stop using the torque set in Pn406 (2406h) as the maximum torque and then let the motor coast.	283
3	Decelerate the motor to a stop using the deceleration time set in Pn30A (230Ah). Use the setting of Pn001 (2001h) = n.□□□X for the status after stopping.	283
4	Decelerate the motor to a stop using the deceleration time set in Pn30A (230Ah) and then let the motor coast.	283
n.□X□□	Reserved (Do not change.)	–
n.X□□□	Reserved (Do not change.)	–

◆ Pn00B(200Bh): Application Function Selections B

Size	Setting Range	Setting Unit	Default Setting	Applicable Motors	When Enabled	Classification	Reference
2	0000h to 1121h	–	0000h	All	After restart	Setup	–

Digit	Meaning	Reference
n.□□□X	Operator Parameter Display Selection Speed Pos Trq	–
0 Default	Display only setup parameters.	170
1	Display all parameters.	170
n.□□X□	Motor Stopping Method for Group 2 Alarms Speed Pos Trq	–
0 Default	Stop the motor by setting the speed reference to 0.	205
1	Apply the dynamic brake or coast the motor to a stop (use the stopping method set in Pn001 (2001h) = n.□□□X).	205
2	Set the stopping method with Pn00A (200Ah) = n.□□□X.	205
n.□X□□	Power Input Selection for Three-phase SERVOPACK Speed Pos Trq	–
0 Default	Use a three-phase power supply input.	179
1	Use a three-phase power supply input as a single-phase power supply input.	179
n.X□□□	Reserved (Do not change.)	–

◆ Pn00C(200Ch): Application Function Selections C

Size	Setting Range	Setting Unit	Default Setting	Applicable Motors	When Enabled	Classification	Reference
2	0000h to 0141h	–	0040h	–	After restart	Setup	326

Digit	Meaning	Applicable Motors
n.□□□X	Function Selection for Test without a Motor Speed Pos Trq	–
0 Default	Disable tests without a motor.	All
1	Enable tests without a motor.	All
n.□□X□	Encoder Resolution for Tests without a Motor Speed Pos Trq	–
0	Use 13 bits.	Rotary
1	Use 20 bits.	Rotary
2	Use 22 bits.	Rotary
3	Use 24 bits.	Rotary
4 Default	Use 26 bits.	Rotary
n.□X□□	Encoder Type Selection for Tests without a Motor Speed Pos Trq	–
0 Default	Use an incremental encoder.	All
1	Use an absolute encoder.	All
n.X□□□	Reserved (Do not change.)	–

◆ Pn00D(200Dh): Application Function Selections D

Size	Setting Range	Setting Unit	Default Setting	Applicable Motors	When Enabled	Classification	Reference
2	0000H to 2001h	–	0000h	All	Immediately	Setup	197

Digit	Meaning
n.□□□X	Reserved (Do not change.)
n.□□X□	Reserved (Do not change.)
n.□X□□	Reserved (Do not change.)
n.X□□□	Overtravel Warning Detection Selection Speed Pos Trq
0 Default	Do not detect overtravel warnings.
1	Detect overtravel warnings.
2	Detect overtravel alarms.

◆ Pn00E(200Eh): Application Function Selections E

Size	Setting Range	Setting Unit	Default Setting	Applicable Motors	When Enabled	Classification	Reference
2	0000h to 4001h	–	0000h	All	After restart	Setup	536

Digit	Meaning
n.□□□X	Reserved (Do not change.)
n.□□X□	Reserved (Do not change.)
n.□X□□	Reserved (Do not change.)
n.X□□□	External Encoder Monitor Usage Speed Pos Trq
0 Default	Do not use an external encoder monitor.
1	Use CCW as the forward direction.
2	Reserved (Do not use.)
3	Use CW as the forward direction.
4	Reserved (Do not use.)

◆ Pn00F(200Fh): Application Function Selections F

Size	Setting Range	Setting Unit	Default Setting	Applicable Motors	When Enabled	Classification	Reference
2	0000h to 2021h	–	0000h	All	After restart	Setup	–

Digit	Meaning	Reference
n.□□□X	SERVOPACK Preventative Maintenance Warning Selection Speed Pos Trq	–
0 Default	Do not detect SERVOPACK preventative maintenance warnings.	515
1	Detect SERVOPACK preventative maintenance warnings.	515
n.□□X□	Servomotor Preventative Maintenance Warning Selection Speed Pos Trq	–
0 Default	Do not detect servomotor preventative maintenance warnings.	516
1	Detect servomotor preventative maintenance warnings.	516
n.□X□□	Reserved (Do not change.)	–
n.X□□□	Reserved (Do not change.)	–

◆ Pn021(2021h): Reserved (Do not change.) Speed Pos Trq

Size	Setting Range	Setting Unit	Default Setting	Applicable Motors	When Enabled	Classification	Reference
2	–	–	0000h	All	–	–	–

◆ Pn022(2022h): Application Function Selections 22

Size	Setting Range	Setting Unit	Default Setting	Applicable Motors	When Enabled	Classification	Reference
2	0000h to 0011h	–	0000h	All	After restart	Setup	198

Digit	Meaning
n.□□□X	Overtravel Release Method Selection Speed Pos Trq
0 Default	Overtravel exists while the P-OT or N-OT signal is being input.
1	Overtravel exists while the P-OT or N-OT signal is input and the current position of the workpiece is separated from the P-OT signal or N-OT signal.
n.□□X□	Reserved (Do not change.)
n.□X□□	Reserved (Do not change.)
n.X□□□	Reserved (Do not change.)

◆ Pn02F(202Fh): Application Function Selections 2F

Size	Setting Range	Setting Unit	Default Setting	Applicable Motors	When Enabled	Classification	Reference
2	0000h to 0002h	–	0000h	All	After restart	Setup	–

Digit	Meaning
n.□□□X	Selection of Capacitor Discharge Mode When Main Circuit Power OFF Speed Pos Trq
0 Default	• SGDXS-R70A to -200A, -1R9D to -170D: Do not perform rapid discharge. • SGDXS-330A to -780A, -210D to -370D: Perform rapid discharge.
1	Perform rapid discharge.
2	Reserved (Do not use.)
n.□□X□	Reserved (Do not change.)
n.□X□□	Reserved (Do not change.)
n.X□□□	Reserved (Do not change.)

◆ Pn040(2040h): Reserved (Do not change.) Speed Pos Trq

Size	Setting Range	Setting Unit	Default Setting	Applicable Motors	When Enabled	Classification	Reference
2	–	–	0000h	–	–	–	–

◆ Pn050(2050h): SigmaLINK II Response Data Selection 1 Speed Pos Trq

Size	Setting Range	Setting Unit	Default Setting	Applicable Motors	When Enabled	Classification	Reference
4	00000000h to FF7EFFFFh	–	00000000h	All	After restart	Setup	552

Digit	Meaning
n.□□□□XXXX	Parameter Number (0000h to FFFFh)
n.□□XX□□□□	Node Address (10h to 1Eh)
n.XX□□□□□□	Reserved.

◆ Pn052(2052h): SigmaLINK II Response Data Selection 2

Speed Pos Trq

Size	Setting Range	Setting Unit	Default Setting	Applicable Motors	When Enabled	Classification	Reference
4	00000000h to FF7EFFFFh	–	00000000h	All	After restart	Setup	552

Digit	Meaning
n.□□□□XXXX	Parameter Number (0000h to FFFFh)
n.□□XX□□□□	Node Address (10h to 1Eh)
n.XX□□□□□□	Reserved.

◆ Pn054(2054h): SigmaLINK II Response Data Selection 3

Speed Pos Trq

Size	Setting Range	Setting Unit	Default Setting	Applicable Motors	When Enabled	Classification	Reference
4	00000000h to FF7EFFFFh	–	00000000h	All	After restart	Setup	552

Digit	Meaning
n.□□□□XXXX	Parameter Number (0000h to FFFFh)
n.□□XX□□□□	Node Address (10h to 1Eh)
n.XX□□□□□□	Reserved.

◆ Pn056(2056h): SigmaLINK II Response Data Selection 4

Speed Pos Trq

Size	Setting Range	Setting Unit	Default Setting	Applicable Motors	When Enabled	Classification	Reference
4	00000000h to FF7EFFFFh	–	00000000h	All	After restart	Setup	552

Digit	Meaning
n.□□□□XXXX	Parameter Number (0000h to FFFFh)
n.□□XX□□□□	Node Address (10h to 1Eh)
n.XX□□□□□□	Reserved.

◆ Pn058(2058h): SigmaLINK II Response Data Selection 5

Speed Pos Trq

Size	Setting Range	Setting Unit	Default Setting	Applicable Motors	When Enabled	Classification	Reference
4	00000000h to FF7EFFFFh	–	00000000h	All	After restart	Setup	552

Digit	Meaning
n.□□□□XXXX	Parameter Number (0000h to FFFFh)
n.□□XX□□□□	Node Address (10h to 1Eh)
n.XX□□□□□□	Reserved.

◆ Pn05A(205Ah): SigmaLINK II Response Data Selection 6

Speed Pos Trq

Size	Setting Range	Setting Unit	Default Setting	Applicable Motors	When Enabled	Classification	Reference
4	00000000h to FF7EFFFFh	–	00000000h	All	After restart	Setup	552

Digit	Meaning
n.□□□□XXXX	Parameter Number (0000h to FFFFh)
n.□□XX□□□□	Node Address (10h to 1Eh)
n.XX□□□□□□	Reserved.

◆ Pn05C(205Ch): SigmaLINK II Response Data Selection 7

Speed Pos Trq

Size	Setting Range	Setting Unit	Default Setting	Applicable Motors	When Enabled	Classification	Reference
4	00000000h to FF7EFFFFh	–	00000000h	All	After restart	Setup	552

Digit	Meaning
n.□□□□XXXX	Parameter Number (0000h to FFFFh)
n.□□XX□□□□	Node Address (10h to 1Eh)
n.XX□□□□□□	Reserved.

◆ Pn05E(205Eh): SigmaLINK II Response Data Selection 8

Speed Pos Trq

Size	Setting Range	Setting Unit	Default Setting	Applicable Motors	When Enabled	Classification	Reference
4	00000000h to FF7EFFFFh	–	00000000h	All	After restart	Setup	552

Digit	Meaning
n.□□□□XXXX	Parameter Number (0000h to FFFFh)
n.□□XX□□□□	Node Address (10h to 1Eh)
n.XX□□□□□□	Reserved.

◆ Pn080(2080h): Application Function Selections 80

Size	Setting Range	Setting Unit	Default Setting	Applicable Motors	When Enabled	Classification	Reference
2	0000h to 1111h	–	0000h	Linear	After restart	Setup	–

Digit	Meaning	Reference
n.□□□X	Polarity Sensor Selection Speed Pos Trq	–
0 Default	Use polarity sensor.	190
1	Do not use polarity sensor.	190
n.□□X□	Motor Phase Sequence Selection Speed Pos Trq	–
0 Default	Set a phase-A lead as a phase sequence of U, V, and W.	188
1	Set a phase-B lead as a phase sequence of U, V, and W.	188
n.□X□□	Reserved (Do not change.)	–
n.X□□□	Calculation Method for Maximum Speed or Encoder Output Pulses Speed Pos Trq	–
0 Default	Calculate the encoder output pulse setting for a fixed maximum motor speed.	863
1	Calculate the maximum motor speed for a fixed encoder output pulse setting.	863

◆ Pn081(2081h): Application Function Selections 81

Size	Setting Range	Setting Unit	Default Setting	Applicable Motors	When Enabled	Classification	Reference
2	0000h to 1111h	–	0000h	All	After restart	Setup	250

Digit	Meaning
n.□□□X	Phase-C Pulse Output Selection Speed Pos Trq
0 Default	Output phase-C pulses only in the forward direction.
1	Output phase-C pulses in both the forward and reverse directions.
n.□□X□	Reserved (Do not change.)
n.□X□□	Reserved (Do not change.)
n.X□□□	Reserved (Do not change.)

◆ Pn090(2090h): SigmaLINK II Command Data Selection 1 Speed Pos Trq

Size	Setting Range	Setting Unit	Default Setting	Applicable Motors	When Enabled	Classification	Reference
4	00000000h to FF7EFFFFh	–	00000000h	All	After restart	Setup	560

Digit	Meaning
n.□□□□XXXX	Parameter Number (0000h to FFFFh)
n.□□XX□□□□	Node Address (10h to 1Eh)
n.XX□□□□□□	Reserved.

◆ Pn092(2092h): SigmaLINK II Command Data Selection 2

Speed Pos Trq

Size	Setting Range	Setting Unit	Default Setting	Applicable Motors	When Enabled	Classification	Reference
4	00000000h to FF7EFFFFh	–	00000000h	All	After restart	Setup	560

Digit	Meaning
n.□□□□XXXX	Parameter Number (0000h to FFFFh)
n.□□XX□□□□	Node Address (10h to 1Eh)
n.XX□□□□□□	Reserved.

◆ Pn094(2094h): SigmaLINK II Command Data Selection 3

Speed Pos Trq

Size	Setting Range	Setting Unit	Default Setting	Applicable Motors	When Enabled	Classification	Reference
4	00000000h to FF7EFFFFh	–	00000000h	All	After restart	Setup	560

Digit	Meaning
n.□□□□XXXX	Parameter Number (0000h to FFFFh)
n.□□XX□□□□	Node Address (10h to 1Eh)
n.XX□□□□□□	Reserved.

◆ Pn096(2096h): SigmaLINK II Command Data Selection 4

Speed Pos Trq

Size	Setting Range	Setting Unit	Default Setting	Applicable Motors	When Enabled	Classification	Reference
4	00000000h to FF7EFFFFh	–	00000000h	All	After restart	Setup	560

Digit	Meaning
n.□□□□XXXX	Parameter Number (0000h to FFFFh)
n.□□XX□□□□	Node Address (10h to 1Eh)
n.XX□□□□□□	Reserved.

◆ Pn0B1(20B1h): SigmaLINK II Sequence Input Allocation 1

Size	Setting Range	Setting Unit	Default Setting	Applicable Motors	When Enabled	Classification	Reference
2	0000h to FFFFh	–	0000h	All	After restart	Setup	559

Digit	Meaning
n.□□XX	SigmaLINK II Response Data Selection Speed Pos Trq
00 Default	Disable (data is not set to the SigmaLINK II sequence input).
01	Allocate SigmaLINK II Response Data 1 to the SigmaLINK II sequence input.
02	Allocate SigmaLINK II Response Data 2 to the SigmaLINK II sequence input.
03	Allocate SigmaLINK II Response Data 3 to the SigmaLINK II sequence input.
04	Allocate SigmaLINK II Response Data 4 to the SigmaLINK II sequence input.
05	Allocate SigmaLINK II Response Data 5 to the SigmaLINK II sequence input.
06	Allocate SigmaLINK II Response Data 6 to the SigmaLINK II sequence input.
07	Allocate SigmaLINK II Response Data 7 to the SigmaLINK II sequence input.
08	Allocate SigmaLINK II Response Data 8 to the SigmaLINK II sequence input.
n.XX□□	SigmaLINK II Sequence Input Allocation Start Position Selection Speed Pos Trq
00 to 20	Specify the allocation start bit to the SigmaLINK II sequence input.

◆ Pn0B2(20B2h): SigmaLINK II Sequence Input Allocation 2

Size	Setting Range	Setting Unit	Default Setting	Applicable Motors	When Enabled	Classification	Reference
2	0000h to FFFFh	–	0000h	All	After restart	Setup	559

Digit	Meaning
n.□□XX	SigmaLINK II Response Data Selection Speed Pos Trq
00 Default	Disable (data is not set to the SigmaLINK II sequence input).
01	Allocate SigmaLINK II Response Data 1 to the SigmaLINK II sequence input.
02	Allocate SigmaLINK II Response Data 2 to the SigmaLINK II sequence input.
03	Allocate SigmaLINK II Response Data 3 to the SigmaLINK II sequence input.
04	Allocate SigmaLINK II Response Data 4 to the SigmaLINK II sequence input.
05	Allocate SigmaLINK II Response Data 5 to the SigmaLINK II sequence input.
06	Allocate SigmaLINK II Response Data 6 to the SigmaLINK II sequence input.
07	Allocate SigmaLINK II Response Data 7 to the SigmaLINK II sequence input.
08	Allocate SigmaLINK II Response Data 8 to the SigmaLINK II sequence input.
n.XX□□	SigmaLINK II Sequence Input Allocation Start Position Selection Speed Pos Trq
00 to 20	Specify the allocation start bit to the SigmaLINK II sequence input.

◆ Pn0B5(20B5h): SigmaLINK II Sequence Output Allocation 1

Size	Setting Range	Setting Unit	Default Setting	Applicable Motors	When Enabled	Classification	Reference
2	0000h to FFFFh	–	0000h	All	After restart	Setup	560

Digit	Meaning
n.□□XX	SigmaLINK II Command Data Selection Speed Pos Trq
00 Default	Disable (data is not set to the SigmaLINK II sequence output).
01	Allocate SigmaLINK II Command Data 1 to the SigmaLINK II sequence output.
02	Allocate SigmaLINK II Command Data 2 to the SigmaLINK II sequence output.
03	Allocate SigmaLINK II Command Data 3 to the SigmaLINK II sequence output.
04	Allocate SigmaLINK II Command Data 4 to the SigmaLINK II sequence output.
n.XX□□	SigmaLINK II Sequence Output Allocation Start Position Selection Speed Pos Trq
00 to 20	Specify the allocation start bit to the SigmaLINK II sequence output.

◆ Pn0D6(20D6h): Reserved (Do not change.) Speed Pos Trq

Size	Setting Range	Setting Unit	Default Setting	Applicable Motors	When Enabled	Classification	Reference
2	–	–	0000h	All	–	–	–

◆ Pn0DA(20DAh): SigmaLINK II Semi-closed Encoder Selection

Size	Setting Range	Setting Unit	Default Setting	Applicable Motors	When Enabled	Classification	Reference
2	0000h to 011Eh	–	0000h	All	After restart	Setup	550

Digit	Meaning
n.□□XX	Node Address Speed Pos Trq
00 to 1E	Select an encoder with a node address between 00h and 1Eh.
n.□X□□	Reserved (Do not change.)
n.X□□□	Reserved (Do not change.)

◆ Pn0DB(20DBh): SigmaLINK II Fully-closed Encoder Selection

Size	Setting Range	Setting Unit	Default Setting	Applicable Motors	When Enabled	Classification	Reference
2	0000h to 011Eh	–	0101h	All	After restart	Setup	–

Digit	Meaning
n.□□XX	Node Address Speed Pos Trq
00 to 1E	Select an encoder with a node address between 00h and 1Eh.
n.□X□□	Reserved (Do not change.)
n.X□□□	Reserved (Do not change.)

◆ Pn0DC(20DCh): SigmaLINK II Node Change Detection Condition Selection

Size	Setting Range	Setting Unit	Default Setting	Applicable Motors	When Enabled	Classification	Reference
2	0000h to 0003h	–	0000h	All	After restart	Setup	–

Digit	Meaning
n.□□□X	Connected Node Change Detection Condition Speed Pos Trq
0 Default	Set vendor ID and product ID as conditions.
1	Set vendor ID, product ID, and serial number as conditions.
2	Set vendor ID, product ID, and product version as conditions.
3	Set vendor ID, product ID, product version, and serial number as conditions.
n.□□X□	Reserved (Do not change.)
n.□X□□	Reserved (Do not change.)
n.X□□□	Reserved (Do not change.)

◆ Pn0DD(20DDh): SigmaLINK II I/O Device Error Detection Selection

Size	Setting Range	Setting Unit	Default Setting	Applicable Motors	When Enabled	Classification	Reference
2	0000h to F4F2h	–	0130h	All	After restart	Setup	–

Digit	Meaning
n.□□□X	SigmaLINK II I/O Device Communications Check Mask Speed Pos Trq
0 Default	Set SigmaLINK II slave communications error as an alarm (A.Cd7).
1	Set SigmaLINK II slave communications error as a warning (A.932).
2	Do not detect the SigmaLINK II slave communications error.
n.□□X□	Reserved (Do not change.)
n.□X□□	SigmaLINK II I/O Device Status Check Mask Speed Pos Trq
0	A.Cd8 occurs when the alarm or warning signal is received from the SigmaLINK II slave.
1 Default	A.Cd8 occurs when the alarm signal is received from the SigmaLINK II slave and A.933 occurs when the warning signal is received.
2	A.933 occurs when the alarm or warning signal is received from the SigmaLINK II slave.
3	Do not detect the SigmaLINK II slave status error.
n.X□□□	Reserved (Do not change.)

◆ Pn100(2100h): Speed Loop Gain

Speed Pos Trq

Size	Setting Range	Setting Unit	Default Setting	Applicable Motors	When Enabled	Classification	Reference
2	10 to 20000	0.1 Hz	400	All	Immediately	Tuning	471

◆ Pn101(2101h): Speed Loop Integral Time Constant

Speed Pos Trq

Size	Setting Range	Setting Unit	Default Setting	Applicable Motors	When Enabled	Classification	Reference
2	15 to 51200	0.01 ms	2000	All	Immediately	Tuning	471

◆ Pn102(2102h): Position Loop Gain

Speed Pos Trq

Size	Setting Range	Setting Unit	Default Setting	Applicable Motors	When Enabled	Classification	Reference
2	10 to 20000	0.1/s	400	All	Immediately	Tuning	471

◆ Pn103(2103h): Moment of Inertia Ratio

Speed Pos Trq

Size	Setting Range	Setting Unit	Default Setting	Applicable Motors	When Enabled	Classification	Reference
2	0 to 65535	1%	100	All	Immediately	Tuning	471

◆ Pn104(2104h): Second Speed Loop Gain

Speed Pos Trq

Size	Setting Range	Setting Unit	Default Setting	Applicable Motors	When Enabled	Classification	Reference
2	10 to 20000	0.1 Hz	400	All	Immediately	Tuning	455

◆ Pn105(2105h): Second Speed Loop Integral Time Constant

Speed Pos Trq

Size	Setting Range	Setting Unit	Default Setting	Applicable Motors	When Enabled	Classification	Reference
2	15 to 51200	0.01 ms	2000	All	Immediately	Tuning	455

◆ Pn106(2106h): Second Position Loop Gain

Speed Pos Trq

Size	Setting Range	Setting Unit	Default Setting	Applicable Motors	When Enabled	Classification	Reference
2	10 to 20000	0.1/s	400	All	Immediately	Tuning	455

◆ Pn109(2109h): Feedforward

Speed Pos Trq

Size	Setting Range	Setting Unit	Default Setting	Applicable Motors	When Enabled	Classification	Reference
2	0 to 100	1%	0	All	Immediately	Tuning	485

◆ Pn10A(210Ah): Feedforward Filter Time Constant

Speed Pos Trq

Size	Setting Range	Setting Unit	Default Setting	Applicable Motors	When Enabled	Classification	Reference
2	0 to 6400	0.01 ms	0	All	Immediately	Tuning	485

◆ Pn10B(210Bh): Gain Application Selections

Size	Setting Range	Setting Unit	Default Setting	Applicable Motors	When Enabled	Classification	Reference
2	0000h to 5334h	–	0000h	All	–	Setup	–

Digit	Meaning	When Enabled	Reference
n.□□□X	Mode Switching Selection Speed Pos Trq	–	–
0 Default	Use the internal torque reference as the condition (level setting: Pn10C (210Ch)).	Immediately	486
1	Use the speed reference as the condition (level setting: Pn10D (210Dh)). Use the speed reference as the condition (level setting: Pn181 (2181h)).	Immediately	486
2	Use the acceleration reference as the condition (level setting: Pn10E (210Eh)). Use the acceleration reference as the condition (level setting: Pn182 (2182h)).	Immediately	486
3	Use the position deviation as the condition (level setting: Pn10F (210Fh)).	Immediately	486
4	Do not use mode switching.	Immediately	486
n.□□X□	Speed Loop Control Method Speed Pos Trq	–	–
0 Default	PI control	After restart	477
1	I-P control	After restart	477
2, 3	Reserved (Do not use.)	After restart	477
n.□X□□	Reserved (Do not change.)	–	–
n.X□□□	Reserved (Do not change.)	–	–

◆ Pn10C(210Ch): Mode Switching Level for Torque Reference

Speed Pos Trq

Size	Setting Range	Setting Unit	Default Setting	Applicable Motors	When Enabled	Classification	Reference
2	0 to 800	1%	200	All	Immediately	Tuning	486

◆ Pn10D(210Dh): Mode Switching Level for Speed Reference

Speed Pos Trq

Size	Setting Range	Setting Unit	Default Setting	Applicable Motors	When Enabled	Classification	Reference
2	0 to 10000	1 min^{-1}	0	Rotary	Immediately	Tuning	486

◆ Pn10E(210Eh): Mode Switching Level for Acceleration

Speed Pos Trq

Size	Setting Range	Setting Unit	Default Setting	Applicable Motors	When Enabled	Classification	Reference
2	0 to 30000	1 min^{-1}/s	0	Rotary	Immediately	Tuning	486

◆ Pn10F(210Fh): Mode Switching Level for Position Deviation

Speed Pos Trq

Size	Setting Range	Setting Unit	Default Setting	Applicable Motors	When Enabled	Classification	Reference
2	0 to 10000	1 reference unit	0	All	Immediately	Tuning	486

◆ Pn11F(211Fh): Position Integral Time Constant

Speed Pos Trq

Size	Setting Range	Setting Unit	Default Setting	Applicable Motors	When Enabled	Classification	Reference
2	0 to 50000	0.1 ms	0	All	Immediately	Tuning	488

◆ Pn121(2121h): Friction Compensation Gain

Speed Pos Trq

Size	Setting Range	Setting Unit	Default Setting	Applicable Motors	When Enabled	Classification	Reference
2	10 to 1000	1%	100	All	Immediately	Tuning	455, 385

◆ Pn122(2122h): Second Friction Compensation Gain

Speed Pos Trq

Size	Setting Range	Setting Unit	Default Setting	Applicable Motors	When Enabled	Classification	Reference
2	10 to 1000	1%	100	All	Immediately	Tuning	455, 385

◆ Pn123(2123h): Friction Compensation Coefficient

Speed Pos Trq

Size	Setting Range	Setting Unit	Default Setting	Applicable Motors	When Enabled	Classification	Reference
2	0 to 100	1%	0	All	Immediately	Tuning	385

◆ Pn124(2124h): Friction Compensation Frequency Correction

Speed Pos Trq

Size	Setting Range	Setting Unit	Default Setting	Applicable Motors	When Enabled	Classification	Reference
2	-10000 to 10000	0.1 Hz	0	All	Immediately	Tuning	385

◆ Pn125(2125h): Friction Compensation Gain Correction

Speed Pos Trq

Size	Setting Range	Setting Unit	Default Setting	Applicable Motors	When Enabled	Classification	Reference
2	1 to 1000	1%	100	All	Immediately	Tuning	385

◆ Pn129(2129h): Third Friction Compensation Gain

Speed Pos Trq

Size	Setting Range	Setting Unit	Default Setting	Applicable Motors	When Enabled	Classification	Reference
2	10 to 1000	1%	100	All	Immediately	Tuning	455, 385

◆ Pn12A(212Ah): Fourth Friction Compensation Gain

Speed Pos Trq

Size	Setting Range	Setting Unit	Default Setting	Applicable Motors	When Enabled	Classification	Reference
2	10 to 1000	1%	100	All	Immediately	Tuning	455, 385

◆ Pn12B(212Bh): Third Speed Loop Gain

Speed Pos Trq

Size	Setting Range	Setting Unit	Default Setting	Applicable Motors	When Enabled	Classification	Reference
2	10 to 20000	0.1 Hz	400	All	Immediately	Tuning	455

◆ Pn12C(212Ch): Third Speed Loop Integral Time Constant

Speed Pos Trq

Size	Setting Range	Setting Unit	Default Setting	Applicable Motors	When Enabled	Classification	Reference
2	15 to 51200	0.01 ms	2000	All	Immediately	Tuning	455

◆ Pn12D(212Dh): Third Position Loop Gain

Speed Pos Trq

Size	Setting Range	Setting Unit	Default Setting	Applicable Motors	When Enabled	Classification	Reference
2	10 to 20000	0.1/s	400	All	Immediately	Tuning	455

◆ Pn12E(212Eh): Fourth Speed Loop Gain

Speed Pos Trq

Size	Setting Range	Setting Unit	Default Setting	Applicable Motors	When Enabled	Classification	Reference
2	10 to 20000	0.1 Hz	400	All	Immediately	Tuning	455

◆ Pn12F(212Fh): Fourth Speed Loop Integral Time Constant

Speed Pos Trq

Size	Setting Range	Setting Unit	Default Setting	Applicable Motors	When Enabled	Classification	Reference
2	15 to 51200	0.01 ms	2000	All	Immediately	Tuning	455

◆ Pn130(2130h): Fourth Position Loop Gain

Speed Pos Trq

Size	Setting Range	Setting Unit	Default Setting	Applicable Motors	When Enabled	Classification	Reference
2	10 to 20000	0.1/s	400	All	Immediately	Tuning	455

◆ Pn131(2131h): Gain Switching Time 1

Speed Pos Trq

Size	Setting Range	Setting Unit	Default Setting	Applicable Motors	When Enabled	Classification	Reference
2	0 to 65535	1 ms	0	All	Immediately	Tuning	455

◆ Pn132(2132h): Gain Switching Time 2

Speed Pos Trq

Size	Setting Range	Setting Unit	Default Setting	Applicable Motors	When Enabled	Classification	Reference
2	0 to 65535	1 ms	0	All	Immediately	Tuning	455

◆ Pn135(2135h): Gain Switching Waiting Time 1

Speed Pos Trq

Size	Setting Range	Setting Unit	Default Setting	Applicable Motors	When Enabled	Classification	Reference
2	0 to 65535	1 ms	0	All	Immediately	Tuning	455

◆ Pn136(2136h): Gain Switching Waiting Time 2

Speed Pos Trq

Size	Setting Range	Setting Unit	Default Setting	Applicable Motors	When Enabled	Classification	Reference
2	0 to 65535	1 ms	0	All	Immediately	Tuning	455

◆ Pn139(2139h): Automatic Gain Switching Selections 1

Size	Setting Range	Setting Unit	Default Setting	Applicable Motors	When Enabled	Classification	Reference
2	0000h to 0052h	–	0000h	All	Immediately	Tuning	455

Digit	Meaning
n.□□□X	Gain Switching Selection Speed Pos Trq
0 Default	The gain is switched manually with bits 12 and 13 (G-Sel) in Controlword_VendorS (2776h).
1	Reserved (Do not use.)
2	Use automatic gain switching pattern 1. The gain settings 1 switch automatically to 2 when switching condition A is satisfied. The gain settings 2 switch automatically to 1 when switching condition A is not satisfied.
n.□□X□	Gain Switching Condition A Speed Pos Trq
0 Default	/COIN (Positioning Completion Output) signal turns ON.
1	/COIN (Positioning Completion Output) signal turns OFF.
2	/NEAR (Near Output) signal turns ON.
3	/NEAR (Near Output) signal turns OFF.
4	Position reference filter output is 0 and position reference input is OFF.
5	Position reference input is ON.
n.□X□□	Reserved (Do not change.)
n.X□□□	Reserved (Do not change.)

◆ Pn13D(213Dh): Current Gain Level

Speed Pos Trq

Size	Setting Range	Setting Unit	Default Setting	Applicable Motors	When Enabled	Classification	Reference
2	100 to 2000	1%	2000	All	Immediately	Tuning	464

◆ Pn13F(213Fh): Less-Deviation Control Second Pos. Integral Time Constant

Speed Pos Trq

Size	Setting Range	Setting Unit	Default Setting	Applicable Motors	When Enabled	Classification	Reference
2	0 to 50000	0.1 ms	0	All	Immediately	Tuning	–

◆ Pn140(2140h): Model Following Control-Related Selections

Size	Setting Range	Setting Unit	Default Setting	Applicable Motors	When Enabled	Classification	Reference
2	0000h to 1121h	–	0100h	All	Immediately	Tuning	–

Digit	Meaning	Reference
n.□□□X	Model Following Control Selection Speed Pos Trq	–
0 Default	Do not use model following control.	478
1	Use model following control.	478
n.□□X□	Vibration Suppression Selection Speed Pos Trq	–
0 Default	Do not perform vibration suppression.	478
1	Perform vibration suppression for a specific frequency.	478
2	Perform vibration suppression for two specific frequencies.	478
n.□X□□	Vibration Suppression Adjustment Selection Speed Pos Trq	–
0	Do not adjust vibration suppression automatically during execution of autotuning without a host reference, autotuning with a host reference, and custom tuning.	385
1 Default	Adjust vibration suppression automatically during execution of autotuning without a host reference, autotuning with a host reference, and custom tuning.	385
n.X□□□	Speed Feedforward (VFF)/Torque Feedforward (TFF) Selection Speed Pos Trq	–
0 Default	Do not use model following control and speed/torque feedforward together.	386, 420
1	Use model following control and speed/torque feedforward together.	386, 420

◆ Pn141(2141h): Model Following Control Gain

Speed Pos Trq

Size	Setting Range	Setting Unit	Default Setting	Applicable Motors	When Enabled	Classification	Reference
2	10 to 20000	0.1/s	500	All	Immediately	Tuning	478

◆ Pn142(2142h): Model Following Control Gain Correction

Speed Pos Trq

Size	Setting Range	Setting Unit	Default Setting	Applicable Motors	When Enabled	Classification	Reference
2	500 to 2000	0.1%	1000	All	Immediately	Tuning	455

◆ Pn143(2143h): Model Following Control Bias in the Forward Direction

Speed Pos Trq

Size	Setting Range	Setting Unit	Default Setting	Applicable Motors	When Enabled	Classification	Reference
2	0 to 10000	0.1%	1000	All	Immediately	Tuning	478

◆ Pn144(2144h): Model Following Control Bias in the Reverse Direction

Speed Pos Trq

Size	Setting Range	Setting Unit	Default Setting	Applicable Motors	When Enabled	Classification	Reference
2	0 to 10000	0.1%	1000	All	Immediately	Tuning	478

◆ Pn145(2145h): Vibration Suppression 1 Frequency A

Speed Pos Trq

Size	Setting Range	Setting Unit	Default Setting	Applicable Motors	When Enabled	Classification	Reference
2	10 to 2500	0.1 Hz	500	All	Immediately	Tuning	420

◆ Pn146(2146h): Vibration Suppression 1 Frequency B

Speed **Pos** Trq

Size	Setting Range	Setting Unit	Default Setting	Applicable Motors	When Enabled	Classification	Reference
2	10 to 2500	0.1 Hz	700	All	Immediately	Tuning	420

◆ Pn147(2147h): Model Following Control Speed Feedforward Compensation

Speed **Pos** Trq

Size	Setting Range	Setting Unit	Default Setting	Applicable Motors	When Enabled	Classification	Reference
2	0 to 10000	0.1%	1000	All	Immediately	Tuning	478

◆ Pn148(2148h): Second Model Following Control Gain

Speed **Pos** Trq

Size	Setting Range	Setting Unit	Default Setting	Applicable Motors	When Enabled	Classification	Reference
2	10 to 20000	0.1/s	500	All	Immediately	Tuning	455

◆ Pn149(2149h): Second Model Following Control Gain Correction

Speed **Pos** Trq

Size	Setting Range	Setting Unit	Default Setting	Applicable Motors	When Enabled	Classification	Reference
2	500 to 2000	0.1%	1000	All	Immediately	Tuning	455

◆ Pn14A(214Ah): Vibration Suppression 2 Frequency

Speed **Pos** Trq

Size	Setting Range	Setting Unit	Default Setting	Applicable Motors	When Enabled	Classification	Reference
2	10 to 2000	0.1 Hz	800	All	Immediately	Tuning	420

◆ Pn14B(214Bh): Vibration Suppression 2 Correction

Speed **Pos** Trq

Size	Setting Range	Setting Unit	Default Setting	Applicable Motors	When Enabled	Classification	Reference
2	10 to 1000	1%	100	All	Immediately	Tuning	420

◆ Pn14F(214Fh): Control-Related Selections

Size	Setting Range	Setting Unit	Default Setting	Applicable Motors	When Enabled	Classification	Reference
2	0000h to 0031h	–	0030h	All	After restart	Tuning	–

Digit	Meaning	Reference
n.□□□X	Model Following Control Type Selection **Speed** **Pos** Trq	–
0 Default	Use overshoot control type for model following control.	481
1	Use response emphasis type for model following control.	481
n.□□X□	Tuning-less Type Selection **Speed** **Pos** Trq	–
0	Use tuning-less type 1.	344
1	Use tuning-less type 2.	344
2	Use tuning-less type 3.	344
3 Default	Use tuning-less type 4.	344
n.□X□□	Reserved (Do not change.)	–
n.X□□□	Reserved (Do not change.)	–

◆ Pn15B(215Bh): Third Model Following Control Gain

Speed **Pos** Trq

Size	Setting Range	Setting Unit	Default Setting	Applicable Motors	When Enabled	Classification	Reference
2	10 to 20000	0.1/s	500	All	Immediately	Tuning	455

◆ Pn15C(215Ch): Third Model Following Control Gain Correction

Speed **Pos** Trq

Size	Setting Range	Setting Unit	Default Setting	Applicable Motors	When Enabled	Classification	Reference
2	500 to 2000	0.1%	1000	All	Immediately	Tuning	455

◆ Pn15D(215Dh): Fourth Model Following Control Gain

Speed **Pos** Trq

Size	Setting Range	Setting Unit	Default Setting	Applicable Motors	When Enabled	Classification	Reference
2	10 to 20000	0.1/s	500	All	Immediately	Tuning	455

◆ Pn15E(215Eh): Fourth Model Following Control Gain Correction

Speed **Pos** Trq

Size	Setting Range	Setting Unit	Default Setting	Applicable Motors	When Enabled	Classification	Reference
2	500 to 2000	0.1%	1000	All	Immediately	Tuning	455

◆ Pn160(2160h): Anti-Resonance Control-Related Selections

Size	Setting Range	Setting Unit	Default Setting	Applicable Motors	When Enabled	Classification	Reference
2	0000h to 0011h	–	0010h	All	Immediately	Tuning	–

Digit	Meaning	Reference
n.□□□X	Anti-Resonance Control Selection **Speed** **Pos** Trq	–
0 Default	Do not use anti-resonance control.	411
1	Use anti-resonance control.	411
n.□□X□	Anti-Resonance Control Adjustment Selection **Speed** **Pos** Trq	–
0	Do not adjust anti-resonance control automatically during execution of autotuning without a host reference, autotuning with a host reference, and custom tuning.	385
1 Default	Adjust anti-resonance control automatically during execution of autotuning without a host reference, autotuning with a host reference, and custom tuning.	385
n.□X□□	Reserved (Do not change.)	–
n.X□□□	Reserved (Do not change.)	–

◆ Pn161(2161h): Anti-Resonance Frequency

Speed **Pos** Trq

Size	Setting Range	Setting Unit	Default Setting	Applicable Motors	When Enabled	Classification	Reference
2	10 to 20000	0.1 Hz	1000	All	Immediately	Tuning	411

◆ Pn162(2162h): Anti-Resonance Gain Correction

Speed **Pos** Trq

Size	Setting Range	Setting Unit	Default Setting	Applicable Motors	When Enabled	Classification	Reference
2	1 to 1000	1%	100	All	Immediately	Tuning	411

◆ Pn163(2163h): Anti-Resonance Damping Gain

Speed Pos Trq

Size	Setting Range	Setting Unit	Default Setting	Applicable Motors	When Enabled	Classification	Reference
2	0 to 300	1%	0	All	Immediately	Tuning	411

◆ Pn164(2164h): Anti-Resonance Filter Time Constant 1 Correction

Speed Pos Trq

Size	Setting Range	Setting Unit	Default Setting	Applicable Motors	When Enabled	Classification	Reference
2	-1000 to 1000	0.01 ms	0	All	Immediately	Tuning	411

◆ Pn165(2165h): Anti-Resonance Filter Time Constant 2 Correction

Speed Pos Trq

Size	Setting Range	Setting Unit	Default Setting	Applicable Motors	When Enabled	Classification	Reference
2	-1000 to 1000	0.01 ms	0	All	Immediately	Tuning	411

◆ Pn166(2166h): Anti-Resonance Damping Gain 2

Speed Pos Trq

Size	Setting Range	Setting Unit	Default Setting	Applicable Motors	When Enabled	Classification	Reference
2	0 to 1000	1%	0	All	Immediately	Tuning	415

◆ Pn170(2170h): Tuning-less Function-Related Selections

Size	Setting Range	Setting Unit	Default Setting	Applicable Motors	When Enabled	Classification	Reference
2	0000h to 2711h	–	1401h	All	–	Setup	343

Digit	Meaning	When Enabled
n.□□□X	Tuning-less Selection Speed Pos Trq	–
0	Disable tuning-less function.	After restart
1 Default	Enable tuning-less function.	After restart
n.□□X□	Speed Control Method Speed Pos Trq	–
0 Default	Use for speed control.	After restart
1	Use for speed control and use host controller for position control.	After restart
n.□X□□	Tuning-less Level Speed Pos Trq	–
0	Set the tuning-less level to 0.	Immediately
1	Set the tuning-less level to 1.	Immediately
2	Set the tuning-less level to 2.	Immediately
3	Set the tuning-less level to 3.	Immediately
4 Default	Set the tuning-less level to 4.	Immediately
5	Set the tuning-less level to 5.	Immediately
6	Set the tuning-less level to 6.	Immediately
7	Set the tuning-less level to 7.	Immediately
n.X□□□	Tuning-less Load Level Speed Pos Trq	–
0	Set the tuning-less load level to 0.	Immediately
1 Default	Set the tuning-less load level to 1.	Immediately
2	Set the tuning-less load level to 2.	Immediately

◆ Pn173(2173h): Load Fluctuation Compensation Control-Related Selections

Size	Setting Range	Setting Unit	Default Setting	Applicable Motors	When Enabled	Classification	Reference
2	0000h to 0001h	–	0000h	All	Immediately	Setup	443

Digit	Meaning
n.□□□X	Load Fluctuation Compensation Control Selection Speed Pos Trq
0 Default	Do not use load fluctuation compensation control.
1	Use load fluctuation compensation control.
n.□□X□	Reserved (Do not change.)
n.□X□□	Reserved (Do not change.)
n.X□□□	Reserved (Do not change.)

◆ Pn174(2174h): Load Fluctuation Compensation Control Response Level

Speed Pos Trq

Size	Setting Range	Setting Unit	Default Setting	Applicable Motors	When Enabled	Classification	Reference
2	10 to 20000	0.1	400	All	Immediately	Tuning	443

◆ Pn181(2181h): Mode Switching Level for Speed Reference

Speed Pos Trq

Size	Setting Range	Setting Unit	Default Setting	Applicable Motors	When Enabled	Classification	Reference
2	0 to 10000	1 mm/s	0	Linear	Immediately	Tuning	486

◆ Pn182(2182h): Mode Switching Level for Acceleration

Speed Pos Trq

Size	Setting Range	Setting Unit	Default Setting	Applicable Motors	When Enabled	Classification	Reference
2	0 to 30000	1 mm/s^2	0	Linear	Immediately	Tuning	486

◆ Pn183(2183h): Low-Frequency Control Selections

Size	Setting Range	Setting Unit	Default Setting	Applicable Motors	When Enabled	Classification	Reference
2	0000h to 0011h	–	0010h	All	Immediately	Tuning	484

Digit	Meaning
n.□□□X	Low-Frequency Control Selections Speed Pos Trq
0 Default	Do not use low-frequency control.
1	Use low-frequency control.
n.□□X□	Low-Frequency Control Type Selection Speed Pos Trq
0	Use amplitude reduction type.
1 Default	Use convergence acceleration type.
n.□X□□	Reserved (Do not change.)
n.X□□□	Reserved (Do not change.)

◆ Pn184(2184h): Low-Frequency Control Frequency

Speed Pos Trq

Size	Setting Range	Setting Unit	Default Setting	Applicable Motors	When Enabled	Classification	Reference
2	1.0 to 100.0	0.1 Hz	10.0	All	Immediately	Tuning	484

◆ Pn185(2185h): Low-Frequency Control Gain

Speed Pos Trq

Size	Setting Range	Setting Unit	Default Setting	Applicable Motors	When Enabled	Classification	Reference
2	-300.0 to 300.0	0.1%	0.0	All	Immediately	Tuning	484

◆ Pn186(2186h): Low-Frequency Control Filter Correction

Speed Pos Trq

Size	Setting Range	Setting Unit	Default Setting	Applicable Motors	When Enabled	Classification	Reference
2	-100 to +100	0.1 Hz	0	All	Immediately	Tuning	484

◆ Pn190(2190h): Less-Deviation Control-Related Selections

Size	Setting Range	Setting Unit	Default Setting	Applicable Motors	When Enabled	Classification	Reference
2	0000h to 1101h	–	0100h	All	After power ON	Setup	448

Digit	Meaning
n.□□□X	Less-Deviation Control Selection Speed Pos Trq
0 Default	Do not use less-deviation control.
1	Use less-deviation control.
n.□□X□	Reserved (Do not change.)
n.□X□□	Reserved (Do not change.)
n.X□□□	Reserved (Do not change.)

◆ Pn191(2191h): Less-Deviation Control Speed Feedforward Gain

Speed Pos Trq

Size	Setting Range	Setting Unit	Default Setting	Applicable Motors	When Enabled	Classification	Reference
2	0 to 10000	0.1%	1000	All	Immediately	Tuning	450

◆ Pn192(2192h): Less-Deviation Control Forward Torque Feedforward Gain

Speed Pos Trq

Size	Setting Range	Setting Unit	Default Setting	Applicable Motors	When Enabled	Classification	Reference
2	0 to 10000	0.1%	1000	All	Immediately	Tuning	451

◆ Pn193(2193h): Less-Deviation Control Reverse Torque Feedforward Gain

Speed Pos Trq

Size	Setting Range	Setting Unit	Default Setting	Applicable Motors	When Enabled	Classification	Reference
2	0 to 10000	0.1%	1000	All	Immediately	Tuning	451

◆ Pn195(2195h): Less-Deviation Control Feedforward Filter Time Constant

Speed Pos Trq

Size	Setting Range	Setting Unit	Default Setting	Applicable Motors	When Enabled	Classification	Reference
2	0 to 65535	0.01 ms	50	All	Immediately	Tuning	451

◆ Pn196(2196h): Less-Dev. Ctrl. Trq. FF Average Movement Time

Speed Pos Trq

Size	Setting Range	Setting Unit	Default Setting	Applicable Motors	When Enabled	Classification	Reference
2	0 to 5100	0.1 ms	0	All	Immediately	Tuning	451

◆ Pn197(2197h): Less-Deviation Control Incomplete Integration Rate

Speed **Pos** Trq

Size	Setting Range	Setting Unit	Default Setting	Applicable Motors	When Enabled	Classification	Reference
2	0 to 10000	0.01%	10000	All	Immediately	Tuning	451

◆ Pn198(2198h): Less-Dev. Ctrl. Rot. Servomotor Viscous Fric. Comp. Coeff.

Speed **Pos** Trq

Size	Setting Range	Setting Unit	Default Setting	Applicable Motors	When Enabled	Classification	Reference
2	0 to 8000	0.01%/100 min^{-1}	0	Rotary	Immediately	Tuning	452

◆ Pn199(2199h): Less-Dev. Ctrl. Lin. Servomotor Viscous Fric. Comp. Coeff.

Speed **Pos** Trq

Size	Setting Range	Setting Unit	Default Setting	Applicable Motors	When Enabled	Classification	Reference
2	0 to 8000	0.01%/100 mm/s	0	Linear	Immediately	Tuning	452

◆ Pn19A(219Ah): Model Follow. Ctrl. Less-Dev. Ctrl. Trq. FF Comp. App. Rate

Speed **Pos** Trq

Size	Setting Range	Setting Unit	Default Setting	Applicable Motors	When Enabled	Classification	Reference
2	0 to 100	0.1%	0	All	Immediately	Tuning	453

◆ Pn205(2205h): Multiturn Limit

Speed **Pos** **Trq**

Size	Setting Range	Setting Unit	Default Setting	Applicable Motors	When Enabled	Classification	Reference
2	0 to 65535	1 rev	65535	Rotary	After restart	Setup	265

◆ Pn207(2207h): Position Control Function Selections

Size	Setting Range	Setting Unit	Default Setting	Applicable Motors	When Enabled	Classification	Reference
2	0000h to 2210h	–	0010h	All	After restart	Setup	241

Digit	Meaning
n.□□□X	Reserved (Do not change.)
n.□□X□	Reserved (Do not change.)
n.□X□□	Reserved (Do not change.)
n.X□□□	/COIN (Positioning Completion Output) Signal Output Timing Speed **Pos** Trq
0 Default	Output when the absolute value of the position deviation is the same or less than the setting of Pn522 (2522h) (Positioning Completed Width).
1	Output when the absolute value of the position error is the same or less than the setting of Pn522 (2522h) (Positioning Completed Width) and the reference after the position reference filter is 0.
2	Output when the absolute value of the position error is the same or less than the setting of Pn522 (2522h) (Positioning Completed Width) and the reference input is 0.

◆ Pn20A(220Ah): Number of External Encoder Scale Pitches

Speed **Pos** Trq

Size	Setting Range	Setting Unit	Default Setting	Applicable Motors	When Enabled	Classification	Reference
4	4 to 1048576	1 scale pitch/ revolution	32768	Rotary	After restart	Setup	531

◆ Pn20E(220Eh): Electronic Gear Ratio (Numerator)

Speed **Pos** Trq

Size	Setting Range	Setting Unit	Default Setting	Applicable Motors	When Enabled	Classification	Reference
4	1 to 1073741824	–	64	All	After restart	Setup	–

Note:

For the settings related to the electronic gear, use objects 2701h to 2704h. For details, refer to the following section.

☞ *15.5 Manufacturer Specific Objects on page 647*

◆ Pn210(2210h): Electronic Gear Ratio (Denominator)

Speed **Pos** Trq

Size	Setting Range	Setting Unit	Default Setting	Applicable Motors	When Enabled	Classification	Reference
4	1 to 1073741824	–	1	All	After restart	Setup	–

Note:

For the settings related to the electronic gear, use objects 2701h to 2704h. For details, refer to the following section.

☞ *15.5 Manufacturer Specific Objects on page 647*

◆ Pn212(2212h): Number of Encoder Output Pulses

Speed **Pos** **Trq**

Size	Setting Range	Setting Unit	Default Setting	Applicable Motors	When Enabled	Classification	Reference
4	16 to 1073741824	1 P/Rev	2048	Rotary	After restart	Setup	252

◆ Pn21D(221Dh): Encoder Resolution Setting

Size	Setting Range	Setting Unit	Default Setting	Applicable Motors	When Enabled	Classification	Reference
2	0000h to 00A1h	–	0080h	Rotary	After restart	Setup	225

Digit	Meaning
n.□□□X	Encoder Resolution Compatibility Selection **Speed** **Pos** Trq
0 Default	Disable encoder resolution compatibility.
1	Enable encoder resolution compatibility.
n.□□X□	Encoder Resolution Compatibility: Resolution Selection **Speed** **Pos** Trq
4	Operate as 20-bit encoder.
6	Operate as 22-bit encoder.
8 Default	Operate as 24-bit encoder.
A	Operate as 26-bit encoder.
Other values	Reserved (Do not use.)
n.□X□□	Reserved (Do not change.)
n.X□□□	Reserved (Do not change.)

◆ Pn22A(222Ah): Fully-closed Control Selections

Size	Setting Range	Setting Unit	Default Setting	Applicable Motors	When Enabled	Classification	Reference
2	0000h to 1003h	–	0000h	Rotary	After restart	Setup	535

Digit	Meaning
n.□□□X	Reserved (Do not change.)
n.□□X□	Reserved (Do not change.)
n.□X□□	Reserved (Do not change.)
n.X□□□	Fully-closed Control Speed Feedback Selection Speed Pos Trq
0 Default	Use motor encoder speed.
1	Use external encoder speed.

◆ Pn230(2230h): Position Control Expansion Function Selections

Size	Setting Range	Setting Unit	Default Setting	Applicable Motors	When Enabled	Classification	Reference
2	0000h to 0001h	–	0000h	All	After restart	Setup	465

Digit	Meaning
n.□□□X	Backlash Compensation Direction Speed Pos Trq
0 Default	Compensate forward references.
1	Compensate reverse references.
n.□□X□	Reserved (Do not change.)
n.□X□□	Reserved (Do not change.)
n.X□□□	Reserved (Do not change.)

◆ Pn231(2231h): Backlash Compensation Value

Speed Pos Trq

Size	Setting Range	Setting Unit	Default Setting	Applicable Motors	When Enabled	Classification	Reference
4	-500000 to 500000	0.1 reference unit	0	All	Immediately	Setup	466

◆ Pn233(2233h): Backlash Compensation Time Constant

Speed Pos Trq

Size	Setting Range	Setting Unit	Default Setting	Applicable Motors	When Enabled	Classification	Reference
2	0 to 65535	0.01 ms	0	All	Immediately	Setup	466

◆ Pn281(2281h): Encoder Output Resolution

Speed Pos Trq

Size	Setting Range	Setting Unit	Default Setting	Applicable Motors	When Enabled	Classification	Reference
2	1 to 4096	1 edge/pitch	20	All	After restart	Setup	253

◆ Pn282(2282h): Linear Encoder Scale Pitch

Speed Pos Trq

Size	Setting Range	Setting Unit	Default Setting	Applicable Motors	When Enabled	Classification	Reference
4	0 to 6553600	0.01 µm	0	Linear	After restart	Setup	183

◆ Pn304(2304h): Jogging Speed

Speed Pos Trq

Size	Setting Range	Setting Unit	Default Setting	Applicable Motors	When Enabled	Classification	Reference
2	0 to 10000	Rotary: 1 min^{-1} Direct Drive: 0.1 min^{-1}	500	Rotary	Immediately	Setup	313

◆ Pn305(2305h): Soft Start Acceleration Time

Speed Pos Trq

Size	Setting Range	Setting Unit	Default Setting	Applicable Motors	When Enabled	Classification	Reference
2	0 to 12000	1 ms	0	All	Immediately	Setup	304

◆ Pn306(2306h): Soft Start Deceleration Time

Speed Pos Trq

Size	Setting Range	Setting Unit	Default Setting	Applicable Motors	When Enabled	Classification	Reference
2	0 to 12000	1 ms	0	All	Immediately	Setup	304

◆ Pn307(2307h): Speed Reference Filter Time Constant

Speed Pos Trq

Size	Setting Range	Setting Unit	Default Setting	Applicable Motors	When Enabled	Classification	Reference
2	0 to 65535	0.01 ms	0	All	Immediately	Setup	305

◆ Pn308(2308h): Speed Feedback Filter Time Constant

Speed Pos Trq

Size	Setting Range	Setting Unit	Default Setting	Applicable Motors	When Enabled	Classification	Reference
2	0 to 65535	0.01 ms	0	All	Immediately	Setup	465

◆ Pn30A(230Ah): Deceleration Time for Servo OFF and Forced Stops

Speed Pos Trq

Size	Setting Range	Setting Unit	Default Setting	Applicable Motors	When Enabled	Classification	Reference
2	0 to 12000	1 ms	0	All	Immediately	Setup	196

◆ Pn30C(230Ch): Speed Feedforward Average Movement Time

Speed Pos Trq

Size	Setting Range	Setting Unit	Default Setting	Applicable Motors	When Enabled	Classification	Reference
2	0 to 5100	0.1 ms	0	All	Immediately	Setup	–

◆ Pn310(2310h): Vibration Detection Selections

Size	Setting Range	Setting Unit	Default Setting	Applicable Motors	When Enabled	Classification	Reference
2	0000h to 0002h	–	0000h	All	Immediately	Setup	276

Digit	Meaning
n.□□□X	Vibration Detection Selection Speed Pos Trq
0 Default	Do not detect vibration.
1	Output a warning (A.911) if vibration is detected.
2	Output an alarm (A.520) if vibration is detected.
n.□□X□	Reserved (Do not change.)
n.□X□□	Reserved (Do not change.)
n.X□□□	Reserved (Do not change.)

◆ Pn311(2311h): Vibration Detection Sensitivity

Speed Pos Trq

Size	Setting Range	Setting Unit	Default Setting	Applicable Motors	When Enabled	Classification	Reference
2	50 to 500	1%	100	All	Immediately	Tuning	276

◆ Pn312(2312h): Vibration Detection Level

Speed Pos Trq

Size	Setting Range	Setting Unit	Default Setting	Applicable Motors	When Enabled	Classification	Reference
2	0 to 5000	1 min^{-1}	50	Rotary	Immediately	Tuning	276

◆ Pn316(2316h): Maximum Motor Speed

Speed Pos Trq

Size	Setting Range	Setting Unit	Default Setting	Applicable Motors	When Enabled	Classification	Reference
2	0 to 65535	1 min^{-1}	10000	Rotary	After restart	Setup	247

◆ Pn324(2324h): Moment of Inertia Calculation Starting Level

Speed Pos Trq

Size	Setting Range	Setting Unit	Default Setting	Applicable Motors	When Enabled	Classification	Reference
2	0 to 20000	1%	300	All	Immediately	Setup	384

◆ Pn383(2383h): Jogging Speed

Speed Pos Trq

Size	Setting Range	Setting Unit	Default Setting	Applicable Motors	When Enabled	Classification	Reference
2	0 to 10000	1 mm/s	50	Linear	Immediately	Setup	313

◆ Pn384(2384h): Vibration Detection Level

Speed Pos Trq

Size	Setting Range	Setting Unit	Default Setting	Applicable Motors	When Enabled	Classification	Reference
2	0 to 5000	1 mm/s	10	Linear	Immediately	Tuning	276

◆ Pn385(2385h): Maximum Motor Speed

Speed Pos Trq

Size	Setting Range	Setting Unit	Default Setting	Applicable Motors	When Enabled	Classification	Reference
2	1 to 100	100 mm/s	50	Linear	After restart	Setup	247

◆ Pn401(2401h): First Stage First Torque Reference Filter Time Constant

Speed Pos Trq

Size	Setting Range	Setting Unit	Default Setting	Applicable Motors	When Enabled	Classification	Reference
2	0 to 65535	0.01 ms	100	All	Immediately	Tuning	473

◆ Pn402(2402h): Forward Torque Limit

Speed Pos Trq

Size	Setting Range	Setting Unit	Default Setting	Applicable Motors	When Enabled	Classification	Reference
2	0 to 800	1%	800	Rotary	Immediately	Setup	256

Note:

The setting is a percentage of the motor rated torque.

◆ Pn403(2403h): Reverse Torque Limit

Speed Pos Trq

Size	Setting Range	Setting Unit	Default Setting	Applicable Motors	When Enabled	Classification	Reference
2	0 to 800	1%	800	Rotary	Immediately	Setup	256

Note:

The setting is a percentage of the motor rated torque.

◆ Pn404(2404h): Forward External Torque Limit

Speed Pos Trq

Size	Setting Range	Setting Unit	Default Setting	Applicable Motors	When Enabled	Classification	Reference
2	0 to 800	1%	100	All	Immediately	Setup	257

Note:

The setting is a percentage of the motor rated torque.

◆ Pn405(2405h): Reverse External Torque Limit

Speed Pos Trq

Size	Setting Range	Setting Unit	Default Setting	Applicable Motors	When Enabled	Classification	Reference
2	0 to 800	1%	100	All	Immediately	Setup	257

Note:

The setting is a percentage of the motor rated torque.

◆ Pn406(2406h): Emergency Stop Torque

Speed Pos Trq

Size	Setting Range	Setting Unit	Default Setting	Applicable Motors	When Enabled	Classification	Reference
2	0 to 800	1%	800	All	Immediately	Setup	195

Note:

The setting is a percentage of the motor rated torque.

◆ Pn407(2407h): Speed Limit during Torque Control

Speed Pos Trq

Size	Setting Range	Setting Unit	Default Setting	Applicable Motors	When Enabled	Classification	Reference
2	0 to 10000	1 min^{-1}	10000	Rotary	Immediately	Setup	243

◆ Pn408(2408h): Torque-Related Function Selections

Size	Setting Range	Setting Unit	Default Setting	Applicable Motors	When Enabled	Classification	Reference
2	0000h to 1111h	–	0000h	All	–	Setup	–

Digit	Meaning	When Enabled	Reference
n.□□□X	Notch Filter Selection 1 Speed Pos Trq	–	–
0 Default	Disable first stage notch filter.	Immediately	473
1	Enable first stage notch filter.	Immediately	473
n.□□X□	Speed Limit Selection Speed Pos Trq	–	–
0 Default	Use the smaller of the maximum motor speed and the setting of Pn407 (2407h) as the speed limit.	After restart	243
	Use the smaller of the maximum motor speed and the setting of Pn480 (2480h) as the speed limit.		
1	Use the smaller of the overspeed alarm detection speed and the setting of Pn407 (2407h) as the speed limit.	After restart	243
	Use the smaller of the overspeed alarm detection speed and the setting of Pn480 (2480h) as the speed limit.		
n.□X□□	Notch Filter Selection 2 Speed Pos Trq	–	–
0 Default	Disable second stage notch filter.	Immediately	473
1	Enable second stage notch filter.	Immediately	473
n.X□□□	Friction Compensation Function Selection Speed Pos Trq	–	–
0 Default	Disable friction compensation.	Immediately	460
1	Enable friction compensation.	Immediately	460

◆ Pn409(2409h): First Stage Notch Filter Frequency

Speed Pos Trq

Size	Setting Range	Setting Unit	Default Setting	Applicable Motors	When Enabled	Classification	Reference
2	10 to 5000	1 Hz	5000	All	Immediately	Tuning	473

◆ Pn40A(240Ah): First Stage Notch Filter Q Value

Speed Pos Trq

Size	Setting Range	Setting Unit	Default Setting	Applicable Motors	When Enabled	Classification	Reference
2	50 to 1000	0.01	70	All	Immediately	Tuning	473

◆ Pn40B(240Bh): First Stage Notch Filter Depth

Speed Pos Trq

Size	Setting Range	Setting Unit	Default Setting	Applicable Motors	When Enabled	Classification	Reference
2	0 to 1000	0.001	0	All	Immediately	Tuning	473

◆ Pn40C(240Ch): Second Stage Notch Filter Frequency

Speed Pos Trq

Size	Setting Range	Setting Unit	Default Setting	Applicable Motors	When Enabled	Classification	Reference
2	10 to 5000	1 Hz	5000	All	Immediately	Tuning	473

◆ Pn40D(240Dh): Second Stage Notch Filter Q Value

Speed Pos Trq

Size	Setting Range	Setting Unit	Default Setting	Applicable Motors	When Enabled	Classification	Reference
2	50 to 1000	0.01	70	All	Immediately	Tuning	473

◆ Pn40E(240Eh): Second Stage Notch Filter Depth

Speed Pos Trq

Size	Setting Range	Setting Unit	Default Setting	Applicable Motors	When Enabled	Classification	Reference
2	0 to 1000	0.001	0	All	Immediately	Tuning	473

◆ Pn40F(240Fh): Second Stage Second Torque Reference Filter Frequency

Speed Pos Trq

Size	Setting Range	Setting Unit	Default Setting	Applicable Motors	When Enabled	Classification	Reference
2	100 to 5000	1 Hz	5000	All	Immediately	Tuning	473

◆ Pn410(2410h): Second Stage Second Torque Reference Filter Q Value

Speed Pos Trq

Size	Setting Range	Setting Unit	Default Setting	Applicable Motors	When Enabled	Classification	Reference
2	50 to 100	0.01	50	All	Immediately	Tuning	473

◆ Pn412(2412h): First Stage Second Torque Reference Filter Time Constant

Speed Pos Trq

Size	Setting Range	Setting Unit	Default Setting	Applicable Motors	When Enabled	Classification	Reference
2	0 to 65535	0.01 ms	100	All	Immediately	Tuning	455

◆ Pn413(2413h): First Stage Third Torque Reference Filter Time Constant

Speed Pos Trq

Size	Setting Range	Setting Unit	Default Setting	Applicable Motors	When Enabled	Classification	Reference
2	0 to 65535	0.01 ms	100	All	Immediately	Tuning	455

◆ Pn414(2414h): First Stage Fourth Torque Reference Filter Time Constant

Speed Pos Trq

Size	Setting Range	Setting Unit	Default Setting	Applicable Motors	When Enabled	Classification	Reference
2	0 to 65535	0.01 ms	100	All	Immediately	Tuning	455

◆ Pn416(2416h): Torque-Related Function Selections 2

Size	Setting Range	Setting Unit	Default Setting	Applicable Motors	When Enabled	Classification	Reference
2	0000h to 1111h	–	0000h	All	Immediately	Setup	474

Digit	Meaning
n.□□□X	Notch Filter Selection 3 Speed Pos Trq
0 Default	Disable third stage notch filter.
1	Enable third stage notch filter.
n.□□X□	Notch Filter Selection 4 Speed Pos Trq
0 Default	Disable fourth stage notch filter.
1	Enable fourth stage notch filter.
n.□X□□	Notch Filter Selection 5 Speed Pos Trq
0 Default	Disable fifth stage notch filter.
1	Enable fifth stage notch filter.
n.X□□□	Reserved (Do not change.)

◆ Pn417(2417h): Third Stage Notch Filter Frequency Speed Pos Trq

Size	Setting Range	Setting Unit	Default Setting	Applicable Motors	When Enabled	Classification	Reference
2	10 to 5000	1 Hz	5000	All	Immediately	Tuning	474

◆ Pn418(2418h): Third Stage Notch Filter Q Value Speed Pos Trq

Size	Setting Range	Setting Unit	Default Setting	Applicable Motors	When Enabled	Classification	Reference
2	50 to 1000	0.01	70	All	Immediately	Tuning	474

◆ Pn419(2419h): Third Stage Notch Filter Depth Speed Pos Trq

Size	Setting Range	Setting Unit	Default Setting	Applicable Motors	When Enabled	Classification	Reference
2	0 to 1000	0.001	0	All	Immediately	Tuning	474

◆ Pn41A(241Ah): Fourth Stage Notch Filter Frequency Speed Pos Trq

Size	Setting Range	Setting Unit	Default Setting	Applicable Motors	When Enabled	Classification	Reference
2	10 to 5000	1 Hz	5000	All	Immediately	Tuning	474

◆ Pn41B(241Bh): Fourth Stage Notch Filter Q Value Speed Pos Trq

Size	Setting Range	Setting Unit	Default Setting	Applicable Motors	When Enabled	Classification	Reference
2	50 to 1000	0.01	70	All	Immediately	Tuning	474

◆ Pn41C(241Ch): Fourth Stage Notch Filter Depth Speed Pos Trq

Size	Setting Range	Setting Unit	Default Setting	Applicable Motors	When Enabled	Classification	Reference
2	0 to 1000	0.001	0	All	Immediately	Tuning	474

◆ Pn41D(241Dh): Fifth Stage Notch Filter Frequency

Speed Pos Trq

Size	Setting Range	Setting Unit	Default Setting	Applicable Motors	When Enabled	Classification	Reference
2	10 to 5000	1 Hz	5000	All	Immediately	Tuning	474

◆ Pn41E(241Eh): Fifth Stage Notch Filter Q Value

Speed Pos Trq

Size	Setting Range	Setting Unit	Default Setting	Applicable Motors	When Enabled	Classification	Reference
2	50 to 1000	0.01	70	All	Immediately	Tuning	474

◆ Pn41F(241Fh): Fifth Stage Notch Filter Depth

Speed Pos Trq

Size	Setting Range	Setting Unit	Default Setting	Applicable Motors	When Enabled	Classification	Reference
2	0 to 1000	0.001	0	All	Immediately	Tuning	474

◆ Pn423(2423h): Speed Ripple Compensation Selections

Size	Setting Range	Setting Unit	Default Setting	Applicable Motors	When Enabled	Classification	Reference
2	0000h to 3112h	–	0002h	–	–	Setup	440

Digit	Meaning	Applicable Motors	When Enabled
n.□□□X	Speed Ripple Compensation Function Selection Speed Pos Trq	–	–
0	Do not execute speed ripple compensation.	Rotary	Immediately
1	Execute speed ripple compensation using the value adjusted by the user.	All	Immediately
2 Default	Execute speed ripple compensation using the default adjustment value.	Rotary	Immediately
n.□□X□	Speed Ripple Compensation Information Disagreement Warning Detection Selection Speed Pos Trq	–	–
0 Default	Detect A.942 alarms.	Rotary	After restart
1	Do not detect A.942 alarms.	Rotary	After restart
n.□X□□	Speed Ripple Compensation Enable Condition Selection Speed Pos Trq	–	–
0 Default	Speed Reference	All	After restart
1	Motor Speed	All	After restart
n.X□□□	Speed Ripple Compensation Function Operation Mode Selection Speed Pos Trq	–	–
0 Default	Execute speed ripple compensation in normal mode.	All	After restart
1	Execute speed ripple compensation in press operation mode.	All	After restart
2	Reserved (Do not use.)	All	After restart
3	Reserved (Do not use.)	All	After restart

◆ Pn424(2424h): Torque Limit at Main Circuit Voltage Drop

Speed Pos Trq

Size	Setting Range	Setting Unit	Default Setting	Applicable Motors	When Enabled	Classification	Reference
2	0 to 100	1%	50	All	Immediately	Setup	246

Note:

The setting is a percentage of the motor rated torque.

◆ Pn425(2425h): Release Time for Torque Limit at Main Circuit Voltage Drop

Speed Pos Trq

Size	Setting Range	Setting Unit	Default Setting	Applicable Motors	When Enabled	Classification	Reference
2	0 to 1000	1 ms	100	All	Immediately	Setup	246

◆ Pn426(2426h): Torque Feedforward Average Movement Time

Speed Pos Trq

Size	Setting Range	Setting Unit	Default Setting	Applicable Motors	When Enabled	Classification	Reference
2	0 to 5100	0.1 ms	0	All	Immediately	Setup	–

◆ Pn427(2427h): Speed Ripple Compensation Enable Speed

Speed Pos Trq

Size	Setting Range	Setting Unit	Default Setting	Applicable Motors	When Enabled	Classification	Reference
2	0 to 10000	1 min^{-1}	0	Rotary	Immediately	Tuning	440

◆ Pn428(2428h): Output Torque Compensation Selections

Size	Setting Range	Setting Unit	Default Setting	Applicable Motors	When Enabled	Classification	Reference
2	0000h to 0001h	–	0001h	All	After restart	Setup	463

Digit	Meaning
n.□□□X	Output Torque Compensation Function Selection Speed Pos Trq
0	Disable output torque compensation.
1 Default	Enable output torque compensation.
n.□□X□	Reserved (Do not change.)
n.□X□□	Reserved (Do not change.)
n.X□□□	Reserved (Do not change.)

◆ Pn456(2456h): Sweep Torque Reference Amplitude

Speed Pos Trq

Size	Setting Range	Setting Unit	Default Setting	Applicable Motors	When Enabled	Classification	Reference
2	1 to 800	1%	15	All	Immediately	Tuning	494

◆ Pn460(2460h): Notch Filter Adjustment Selections 1

Size	Setting Range	Setting Unit	Default Setting	Applicable Motors	When Enabled	Classification	Reference
2	0000h to 0101h	–	0101h	All	Immediately	Tuning	347, 384

Digit	Meaning
n.□□□X	Notch Filter Adjustment Selection 1 Speed Pos Trq
0	Do not adjust the first stage notch filter automatically during execution of autotuning without a host reference, autotuning with a host reference, and custom tuning.
1 Default	Adjust the first stage notch filter automatically during execution of autotuning without a host reference, autotuning with a host reference, and custom tuning.
n.□□X□	Reserved (Do not change.)
n.□X□□	Notch Filter Adjustment Selection 2 Speed Pos Trq
0	Do not adjust the second stage notch filter automatically when the tuning-less function is enabled or during execution of autotuning without a host reference, autotuning with a host reference, and custom tuning.
1 Default	Adjust the second stage notch filter automatically when the tuning-less function is enabled or during execution of autotuning without a host reference, autotuning with a host reference, and custom tuning.
n.X□□□	Reserved (Do not change.)

◆ Pn475(2475h): Gravity Compensation-Related Selections

Size	Setting Range	Setting Unit	Default Setting	Applicable Motors	When Enabled	Classification	Reference
2	0000h to 0001h	–	0000h	All	After restart	Setup	462

Digit	Meaning
n.□□□X	Gravity Compensation Selection Speed Pos Trq
0 Default	Disable gravity compensation.
1	Enable gravity compensation.
n.□□X□	Reserved (Do not change.)
n.□X□□	Reserved (Do not change.)
n.X□□□	Reserved (Do not change.)

◆ Pn476(2476h): Gravity Compensation Torque

Speed Pos Trq

Size	Setting Range	Setting Unit	Default Setting	Applicable Motors	When Enabled	Classification	Reference
2	-1000 to 1000	0.1%	0	All	Immediately	Tuning	462

◆ Pn480(2480h): Speed Limit during Force Control

Speed Pos Trq

Size	Setting Range	Setting Unit	Default Setting	Applicable Motors	When Enabled	Classification	Reference
2	0 to 10000	1 mm/s	10000	Linear	Immediately	Setup	243

◆ Pn481(2481h): Polarity Detection Speed Loop Gain

Speed Pos Trq

Size	Setting Range	Setting Unit	Default Setting	Applicable Motors	When Enabled	Classification	Reference
2	10 to 20000	0.1 Hz	400	Linear	Immediately	Tuning	–

◆ Pn482(2482h): Polarity Detection Speed Loop Integral Time

Speed Pos Trq

Size	Setting Range	Setting Unit	Default Setting	Applicable Motors	When Enabled	Classification	Reference
2	15 to 51200	0.01 ms	3000	Linear	Immediately	Tuning	–

◆ Pn483(2483h): Forward Force Limit

Speed Pos Trq

Size	Setting Range	Setting Unit	Default Setting	Applicable Motors	When Enabled	Classification	Reference
2	0 to 800	1%	30	Linear	Immediately	Setup	256

Note:

The setting is a percentage of the motor rated torque.

◆ Pn484(2484h): Reverse Force Limit

Speed Pos Trq

Size	Setting Range	Setting Unit	Default Setting	Applicable Motors	When Enabled	Classification	Reference
2	0 to 800	1%	30	Linear	Immediately	Setup	256

Note:

The setting is a percentage of the motor rated torque.

◆ Pn485(2485h): Polarity Detection Reference Speed

Speed Pos Trq

Size	Setting Range	Setting Unit	Default Setting	Applicable Motors	When Enabled	Classification	Reference
2	0 to 100	1 mm/s	20	Linear	Immediately	Tuning	–

◆ Pn486(2486h): Polarity Detection Reference Acceleration/Deceleration Time

Speed Pos Trq

Size	Setting Range	Setting Unit	Default Setting	Applicable Motors	When Enabled	Classification	Reference
2	0 to 100	1 ms	25	Linear	Immediately	Tuning	–

◆ Pn487(2487h): Polarity Detection Constant Speed Time

Speed Pos Trq

Size	Setting Range	Setting Unit	Default Setting	Applicable Motors	When Enabled	Classification	Reference
2	0 to 300	1 ms	0	Linear	Immediately	Tuning	–

◆ Pn488(2488h): Polarity Detection Reference Waiting Time

Speed Pos Trq

Size	Setting Range	Setting Unit	Default Setting	Applicable Motors	When Enabled	Classification	Reference
2	50 to 500	1 ms	100	Linear	Immediately	Tuning	–

◆ Pn48E(248Eh): Polarity Detection Range

Speed Pos Trq

Size	Setting Range	Setting Unit	Default Setting	Applicable Motors	When Enabled	Classification	Reference
2	1 to 65535	1 mm	10	Linear	Immediately	Tuning	–

◆ Pn490(2490h): Polarity Detection Load Level

Speed Pos Trq

Size	Setting Range	Setting Unit	Default Setting	Applicable Motors	When Enabled	Classification	Reference
2	0 to 20000	1%	100	Linear	Immediately	Tuning	–

◆ Pn495(2495h): Polarity Detection Confirmation Force Reference

Speed Pos Trq

Size	Setting Range	Setting Unit	Default Setting	Applicable Motors	When Enabled	Classification	Reference
2	0 to 200	1%	100	Linear	Immediately	Tuning	–

◆ Pn498(2498h): Polarity Detection Allowable Error Range

Speed Pos Trq

Size	Setting Range	Setting Unit	Default Setting	Applicable Motors	When Enabled	Classification	Reference
2	0 to 30	1 deg	10	Linear	Immediately	Tuning	–

◆ Pn49F(249Fh): Speed Ripple Compensation Enable Speed (Linear)

Speed Pos Trq

Size	Setting Range	Setting Unit	Default Setting	Applicable Motors	When Enabled	Classification	Reference
2	0 to 10000	1 mm/s	0	Linear	Immediately	Tuning	440

◆ Pn501(2501h): Zero Clamping Level

Speed Pos Trq

Size	Setting Range	Setting Unit	Default Setting	Applicable Motors	When Enabled	Classification	Reference
2	0 to 10000	1 min^{-1}	10	Rotary	Immediately	Setup	–

◆ Pn502(2502h): Rotation Detection Level

Speed Pos Trq

Size	Setting Range	Setting Unit	Default Setting	Applicable Motors	When Enabled	Classification	Reference
2	1 to 10000	1 min^{-1}	20	Rotary	Immediately	Setup	237

◆ Pn503(2503h): Speed Coincidence Detection Signal Output Width

Speed Pos Trq

Size	Setting Range	Setting Unit	Default Setting	Applicable Motors	When Enabled	Classification	Reference
2	0 to 100	1 min^{-1}	10	Rotary	Immediately	Setup	239

◆ Pn506(2506h): Brake Reference-Servo OFF Delay Time

Speed Pos Trq

Size	Setting Range	Setting Unit	Default Setting	Applicable Motors	When Enabled	Classification	Reference
2	0 to 50	10 ms	0	All	Immediately	Setup	200

◆ Pn507(2507h): Brake Reference Output Speed Level

Speed Pos Trq

Size	Setting Range	Setting Unit	Default Setting	Applicable Motors	When Enabled	Classification	Reference
2	0 to 10000	1 min^{-1}	100	Rotary	Immediately	Setup	200

◆ Pn508(2508h): Servo OFF-Brake Command Waiting Time

Speed Pos Trq

Size	Setting Range	Setting Unit	Default Setting	Applicable Motors	When Enabled	Classification	Reference
2	10 to 100	10 ms	50	All	Immediately	Setup	200

◆ Pn509(2509h): Momentary Power Interruption Hold Time

Speed Pos Trq

Size	Setting Range	Setting Unit	Default Setting	Applicable Motors	When Enabled	Classification	Reference
2	20 to 50000	1 ms	20	All	Immediately	Setup	244

◆ Pn50A(250Ah): Input Signal Selections 1

Size	Setting Range	Setting Unit	Default Setting	Applicable Motors	When Enabled	Classification	Reference
2	0000h to FFF2h	–	1881h	All	After restart	Setup	–

Digit	Meaning	Reference
n.□□□X	Input Signal Allocation Mode Speed Pos Trq	–
0	Reserved (Do not use.)	232
1 Default	Use Pn50A to Pn516 (Sigma-7S-compatible I/O signal allocation mode).	232
2	Use Pn590 to Pn5BC (SigmaLINK II input signal allocation mode).	232
n.□□X□	Reserved (Do not change.)	–
n.□X□□	Reserved (Do not change.)	–
n.X□□□	P-OT (Forward Drive Prohibit Input) Signal Allocation Speed Pos Trq	–
0	Enable forward drive when CN1-13 input signal is ON (closed).	195
1 Default	Enable forward drive when CN1-7 input signal is ON (closed).	195
2	Enable forward drive when CN1-8 input signal is ON (closed).	195
3	Enable forward drive when CN1-9 input signal is ON (closed).	195
4	Enable forward drive when CN1-10 input signal is ON (closed).	195
5	Enable forward drive when CN1-11 input signal is ON (closed).	195
6	Enable forward drive when CN1-12 input signal is ON (closed).	195
7	Set the signal to always prohibit forward drive.	195
8	Set the signal to always enable forward drive.	195
9	Enable forward drive when CN1-13 input signal is OFF (open).	195
A	Enable forward drive when CN1-7 input signal is OFF (open).	195
B	Enable forward drive when CN1-8 input signal is OFF (open).	195
C	Enable forward drive when CN1-9 input signal is OFF (open).	195
D	Enable forward drive when CN1-10 input signal is OFF (open).	195
E	Enable forward drive when CN1-11 input signal is OFF (open).	195
F	Enable forward drive when CN1-12 input signal is OFF (open).	195

◆ Pn50B(250Bh): Input Signal Selections 2

Size	Setting Range	Setting Unit	Default Setting	Applicable Motors	When Enabled	Classification	Reference
2	0000h to FFFFh	–	8882h	All	After restart	Setup	–

Digit	Meaning	Reference
n.□□□X	N-OT (Reverse Drive Prohibit Input) Signal Allocation Speed Pos Trq	–
0	Enable reverse drive when CN1-13 input signal is ON (closed).	195
1	Enable reverse drive when CN1-7 input signal is ON (closed).	195
2 Default	Enable reverse drive when CN1-8 input signal is ON (closed).	195
3	Enable reverse drive when CN1-9 input signal is ON (closed).	195
4	Enable reverse drive when CN1-10 input signal is ON (closed).	195
5	Enable reverse drive when CN1-11 input signal is ON (closed).	195
6	Enable reverse drive when CN1-12 input signal is ON (closed).	195
7	Set the signal to always prohibit reverse drive.	195
8	Set the signal to always enable reverse drive.	195
9	Enable reverse drive when CN1-13 input signal is OFF (open).	195
A	Enable reverse drive when CN1-7 input signal is OFF (open).	195
B	Enable reverse drive when CN1-8 input signal is OFF (open).	195
C	Enable reverse drive when CN1-9 input signal is OFF (open).	195
D	Enable reverse drive when CN1-10 input signal is OFF (open).	195
E	Enable reverse drive when CN1-11 input signal is OFF (open).	195
F	Enable reverse drive when CN1-12 input signal is OFF (open).	195
n.□□X□	Reserved (Do not change.)	–
n.□X□□	/P-CL (Forward External Torque Limit Input) Signal Allocation Speed Pos Trq	–
0	Active when CN1-13 input signal is ON (closed).	257
1	Active when CN1-7 input signal is ON (closed).	257
2	Active when CN1-8 input signal is ON (closed).	257
3	Active when CN1-9 input signal is ON (closed).	257
4	Active when CN1-10 input signal is ON (closed).	257
5	Active when CN1-11 input signal is ON (closed).	257
6	Active when CN1-12 input signal is ON (closed).	257
7	The signal is always active.	257
8 Default	The signal is always inactive.	257
9	Active when CN1-13 input signal is OFF (open).	257
A	Active when CN1-7 input signal is OFF (open).	257
B	Active when CN1-8 input signal is OFF (open).	257
C	Active when CN1-9 input signal is OFF (open).	257
D	Active when CN1-10 input signal is OFF (open).	257
E	Active when CN1-11 input signal is OFF (open).	257
F	Active when CN1-12 input signal is OFF (open).	257
n.X□□□	/N-CL (Reverse External Torque Limit Input) Signal Allocation Speed Pos Trq	–
0 to F	The allocations are the same as the /P-CL (Forward External Torque Limit Input) signal allocations.	257

◆ Pn50E(250Eh): Output Signal Selections 1

Size	Setting Range	Setting Unit	Default Setting	Applicable Motors	When Enabled	Classification	Reference
2	0000h to 6666h	–	0000h	All	After restart	Setup	–

Digit	Meaning	Reference
n.□□□X	/COIN (Positioning Completion Output) Signal Allocation Speed Pos Trq	–
0 Default	Disabled (the above signal output is not used).	240
1	Output the signal from the CN1-1 or CN1-2 output terminal.	240
2	Output the signal from the CN1-23 or CN1-24 output terminal.	240
3	Output the signal from the CN1-25 or CN1-26 output terminal.	240
4	Reserved (Do not use.)	240
5	Reserved (Do not use.)	240
6	Reserved (Do not use.)	240
Other values	Disabled (the above signal output is not used).	240
n.□□X□	/V-CMP (Speed Coincidence Detection Output) Signal Allocation Speed Pos Trq	–
0 to 6	The allocations are the same as the /COIN (Positioning Completion Output) signal allocations.	239
n.□X□□	/TGON (Rotation Detection Output) Signal Allocation Speed Pos Trq	–
0 to 6	The allocations are the same as the /COIN (Positioning Completion Output) signal allocations.	237
n.X□□□	/S-RDY (Servo Ready Output) Signal Allocation Speed Pos Trq	–
0 to 6	The allocations are the same as the /COIN (Positioning Completion Output) signal allocations.	238

◆ Pn50F(250Fh): Output Signal Selections 2

Size	Setting Range	Setting Unit	Default Setting	Applicable Motors	When Enabled	Classification	Reference
2	0000h to 6666h	–	0100h	All	After restart	Setup	–

Digit	Meaning	Reference
n.□□□X	/CLT (Torque Limit Detection Output) Signal Allocation Speed Pos Trq	–
0 Default	Disabled (the above signal output is not used).	260
1	Output the signal from the CN1-1 or CN1-2 output terminal.	260
2	Output the signal from the CN1-23 or CN1-24 output terminal.	260
3	Output the signal from the CN1-25 or CN1-26 output terminal.	260
4	Reserved (Do not use.)	260
5	Reserved (Do not use.)	260
6	Reserved (Do not use.)	260
Other values	Disabled (the above signal output is not used).	260
n.□□X□	/VLT (Speed Limit Detection Output) Signal Allocation Speed Pos Trq	–
0 to 6	The allocations are the same as the /CLT (Torque Limit Detection Output) signal allocations.	242
n.□X□□	/BK (Brake Output) Signal Allocation Speed Pos Trq	–
0 to 6	The allocations are the same as the /CLT (Torque Limit Detection Output) signal allocations.	201
n.X□□□	/WARN (Warning Output) Signal Allocation Speed Pos Trq	–
0 to 6	The allocations are the same as the /CLT (Torque Limit Detection Output) signal allocations.	237

◆ Pn510(2510h): Output Signal Selections 3

Size	Setting Range	Setting Unit	Default Setting	Applicable Motors	When Enabled	Classification	Reference
2	0000h to 0666h	–	0000h	All	After restart	Setup	241

Digit	Meaning
n.□□□X	/NEAR (Near Output) Signal Allocation Speed Pos Trq
0 Default	Disabled (the above signal output is not used).
1	Output the signal from the CN1-1 or CN1-2 output terminal.
2	Output the signal from the CN1-23 or CN1-24 output terminal.
3	Output the signal from the CN1-25 or CN1-26 output terminal.
4	Reserved (Do not use.)
5	Reserved (Do not use.)
6	Reserved (Do not use.)
Other values	Disabled (the above signal output is not used).
n.□□X□	Reserved (Do not change.)
n.□X□□	Reserved (Do not change.)
n.X□□□	Reserved (Do not change.)

◆ Pn511(2511h): Input Signal Selections 5

Size	Setting Range	Setting Unit	Default Setting	Applicable Motors	When Enabled	Classification	Reference
2	0000h to FFFFh	–	6543h	All	After restart	Setup	232

Digit	Meaning
n.□□□X	Reserved (Do not change.)
n.□□X□	/Probe1 (Probe 1 Latch Input) Signal Allocation Speed Pos Trq
0 to 3	The signal is always inactive.
4 Default	Active when CN1-10 input signal is ON (closed).
5	Active when CN1-11 input signal is ON (closed).
6	Active when CN1-12 input signal is ON (closed).
7 to C	The signal is always inactive.
D	Active when CN1-10 input signal is OFF (open).
E	Active when CN1-11 input signal is OFF (open).
F	Active when CN1-12 input signal is OFF (open).
n.□X□□	/Probe2 (Probe 2 Latch Input) Signal Allocation Speed Pos Trq
0 to F	The allocations are the same as the /Probe1 (Probe 1 Latch Input) signal allocations.
n.X□□□	/Home (Home Switch Input) Signal Allocation Speed Pos Trq
0 to F	The allocations are the same as the /Probe1 (Probe 1 Latch Input) signal allocations.

◆ Pn512(2512h): Output Signal Inverse Settings

Size	Setting Range	Setting Unit	Default Setting	Applicable Motors	When Enabled	Classification	Reference
2	0000h to 1111h	–	0000h	All	After restart	Setup	234

Digit	Meaning
n.□□□X	Output Signal Inversion for CN1-1 and CN1-2 Terminals Speed Pos Trq
0 Default	The signal is not inverted.
1	The signal is inverted.
n.□□X□	Output Signal Inversion for CN1-23 and CN1-24 Terminals Speed Pos Trq
0 Default	The signal is not inverted.
1	The signal is inverted.
n.□X□□	Output Signal Inversion for CN1-25 and CN1-26 Terminals Speed Pos Trq
0 Default	The signal is not inverted.
1	The signal is inverted.
n.X□□□	Reserved (Do not change.)

◆ Pn514(2514h): Output Signal Selections 4

Size	Setting Range	Setting Unit	Default Setting	Applicable Motors	When Enabled	Classification	Reference
2	0000h to 0666h	–	0000h	All	After restart	Setup	516

Digit	Meaning
n.□□□X	Reserved (Do not change.)
n.□□X□	Reserved (Do not change.)
n.□X□□	/PM (Preventative Maintenance Output) Signal Allocation Speed Pos Trq
0 Default	Disabled (the above signal output is not used).
1	Output the signal from the CN1-1 or CN1-2 output terminal.
2	Output the signal from the CN1-23 or CN1-24 output terminal.
3	Output the signal from the CN1-25 or CN1-26 output terminal.
4	Reserved (Do not use.)
5	Reserved (Do not use.)
6	Reserved (Do not use.)
Other values	Disabled (the above signal output is not used).
n.X□□□	Reserved (Do not change.)

◆ Pn516(2516h): Input Signal Selections 7

Size	Setting Range	Setting Unit	Default Setting	Applicable Motors	When Enabled	Classification	Reference
2	0000h to FFFFh	–	8888h	All	After restart	Setup	283

Digit	Meaning
n.□□□X	FSTP (Forced Stop Input) Signal Allocation Speed Pos Trq
0	Enable drive when CN1-13 input signal is ON (closed).
1	Enable drive when CN1-7 input signal is ON (closed).
2	Enable drive when CN1-8 input signal is ON (closed).
3	Enable drive when CN1-9 input signal is ON (closed).
4	Enable drive when CN1-10 input signal is ON (closed).
5	Enable drive when CN1-11 input signal is ON (closed).
6	Enable drive when CN1-12 input signal is ON (closed).
7	Set the signal to always prohibit drive (always force the motor to stop).
8 Default	Set the signal to always enable drive (always disable forcing the motor to stop).
9	Enable drive when CN1-13 input signal is OFF (open).
A	Enable drive when CN1-7 input signal is OFF (open).
B	Enable drive when CN1-8 input signal is OFF (open).
C	Enable drive when CN1-9 input signal is OFF (open).
D	Enable drive when CN1-10 input signal is OFF (open).
E	Enable drive when CN1-11 input signal is OFF (open).
F	Enable drive when CN1-12 input signal is OFF (open).
n.□□X□	Reserved (Do not change.)
n.□X□□	Reserved (Do not change.)
n.X□□□	Reserved (Do not change.)

◆ Pn518(2518h): Reserved (Do not change.)

Speed Pos Trq

Size	Setting Range	Setting Unit	Default Setting	Applicable Motors	When Enabled	Classification	Reference
–	–	–	–	All	–	–	–

◆ Pn51B(251Bh): Motor-Load Position Deviation Overflow Detection Level

Speed Pos Trq

Size	Setting Range	Setting Unit	Default Setting	Applicable Motors	When Enabled	Classification	Reference
4	0 to 1073741824	1 reference unit	1000	Rotary	Immediately	Setup	532

◆ Pn51E(251Eh): Position Deviation Overflow Warning Level

Speed Pos Trq

Size	Setting Range	Setting Unit	Default Setting	Applicable Motors	When Enabled	Classification	Reference
2	10 to 100	1%	100	All	Immediately	Setup	340

◆ Pn520(2520h): Position Deviation Overflow Alarm Level

Speed Pos Trq

Size	Setting Range	Setting Unit	Default Setting	Applicable Motors	When Enabled	Classification	Reference
4	1 to 1073741823	1 reference unit	6116694	All	Immediately	Setup	339, 480

◆ Pn522(2522h): In-position Range

Speed Pos Trq

Size	Setting Range	Setting Unit	Default Setting	Applicable Motors	When Enabled	Classification	Reference
4	0 to 1073741824	1 reference unit	7	All	Immediately	Setup	240

◆ Pn524(2524h): Near Signal Width

Speed Pos Trq

Size	Setting Range	Setting Unit	Default Setting	Applicable Motors	When Enabled	Classification	Reference
4	1 to 1073741824	1 reference unit	1073741824	All	Immediately	Setup	241

◆ Pn526(2526h): Position Deviation Overflow Alarm Level at Servo ON

Speed Pos Trq

Size	Setting Range	Setting Unit	Default Setting	Applicable Motors	When Enabled	Classification	Reference
4	1 to 1073741823	1 reference unit	6116694	All	Immediately	Setup	341

◆ Pn528(2528h): Position Deviation Overflow Warning Level at Servo ON

Speed Pos Trq

Size	Setting Range	Setting Unit	Default Setting	Applicable Motors	When Enabled	Classification	Reference
2	10 to 100	1%	100	All	Immediately	Setup	341

◆ Pn529(2529h): Speed Limit Level at Servo ON

Speed Pos Trq

Size	Setting Range	Setting Unit	Default Setting	Applicable Motors	When Enabled	Classification	Reference
2	0 to 10000	1 min^{-1}	10000	Rotary	Immediately	Setup	341

◆ Pn52A(252Ah): Multiplier per Fully-closed Rotation

Speed Pos Trq

Size	Setting Range	Setting Unit	Default Setting	Applicable Motors	When Enabled	Classification	Reference
2	0 to 100	1%	20	Rotary	Immediately	Tuning	532

◆ Pn52B(252Bh): Overload Warning Level

Speed Pos Trq

Size	Setting Range	Setting Unit	Default Setting	Applicable Motors	When Enabled	Classification	Reference
2	1 to 100	1%	20	All	Immediately	Setup	207

◆ Pn52C(252Ch): Base Current Derating at Motor Overload Detection

Speed Pos Trq

Size	Setting Range	Setting Unit	Default Setting	Applicable Motors	When Enabled	Classification	Reference
2	10 to 100	1%	100	All	After restart	Setup	207

◆ Pn530(2530h): Program Jogging-Related Selections

Size	Setting Range	Setting Unit	Default Setting	Applicable Motors	When Enabled	Classification	Reference
2	0000h to 0005h	–	0000h	All	Immediately	Setup	319

Digit	Meaning
n.□□□X	Program Jogging Operation Pattern Speed Pos Trq
0 Default	(Waiting time in Pn535 (2535h) → Forward by travel distance in Pn531 (2531h)) × Number of movements in Pn536 (2536h)
1	(Waiting time in Pn535 (2535h) → Reverse by travel distance in Pn531 (2531h)) × Number of movements in Pn536 (2536h)
2	(Waiting time in Pn535 (2535h) → Forward by travel distance in Pn531 (2531h)) × Number of movements in Pn536 (2536h) (Waiting time in Pn535 (2535h) → Reverse by travel distance in Pn531 (2531h)) × Number of movements in Pn536 (2536h)
3	(Waiting time in Pn535 (2535h) → Reverse by travel distance in Pn531 (2531h)) × Number of movements in Pn536 (2536h) (Waiting time in Pn535 (2535h) → Forward by travel distance in Pn531 (2531h)) × Number of movements in Pn536 (2536h)
4	(Waiting time in Pn535 (2535h) → Forward by travel distance in Pn531 (2531h) → Waiting time in Pn535 (2535h) → Reverse by travel distance in Pn531 (2531h)) × Number of movements in Pn536 (2536h)
5	(Waiting time in Pn535 (2535h) → Reverse by travel distance in Pn531 (2531h) → Waiting time in Pn535 (2535h) → Forward by travel distance in Pn531 (2531h)) × Number of movements in Pn536 (2536h)
n.□□X□	Reserved (Do not change.)
n.□X□□	Reserved (Do not change.)
n.X□□□	Reserved (Do not change.)

◆ Pn531(2531h): Program Jogging Travel Distance

Speed Pos Trq

Size	Setting Range	Setting Unit	Default Setting	Applicable Motors	When Enabled	Classification	Reference
4	1 to 1073741824	1 reference unit	32768	All	Immediately	Setup	319

◆ Pn533(2533h): Program Jogging Movement Speed

Speed Pos Trq

Size	Setting Range	Setting Unit	Default Setting	Applicable Motors	When Enabled	Classification	Reference
2	1 to 10000	Rotary: 1 min^{-1} Direct Drive: 0.1 min^{-1}	500	Rotary	Immediately	Setup	319

◆ Pn534(2534h): Program Jogging Acceleration/Deceleration Time

Speed Pos Trq

Size	Setting Range	Setting Unit	Default Setting	Applicable Motors	When Enabled	Classification	Reference
2	2 to 10000	1 ms	100	All	Immediately	Setup	319

◆ Pn535(2535h): Program Jogging Waiting Time

Speed Pos Trq

Size	Setting Range	Setting Unit	Default Setting	Applicable Motors	When Enabled	Classification	Reference
2	0 to 10000	1 ms	100	All	Immediately	Setup	319

◆ Pn536(2536h): Program Jogging Number of Movements

Speed Pos Trq

Size	Setting Range	Setting Unit	Default Setting	Applicable Motors	When Enabled	Classification	Reference
2	0 to 1000	1 time	1	All	Immediately	Setup	319

◆ Pn540(2540h): Maximum Search Gain

Speed Pos Trq

Size	Setting Range	Setting Unit	Default Setting	Applicable Motors	When Enabled	Classification	Reference
2	10 to 4000	0.1 Hz	3000	All	Immediately	Tuning	–

◆ Pn550(2550h): Analog Monitor 1 Offset Voltage

Speed Pos Trq

Size	Setting Range	Setting Unit	Default Setting	Applicable Motors	When Enabled	Classification	Reference
2	-10000 to 10000	0.1 V	0	All	Immediately	Setup	510

◆ Pn551(2551h): Analog Monitor 2 Offset Voltage

Speed Pos Trq

Size	Setting Range	Setting Unit	Default Setting	Applicable Motors	When Enabled	Classification	Reference
2	-10000 to 10000	0.1 V	0	All	Immediately	Setup	510

◆ Pn552(2552h): Analog Monitor 1 Magnification

Speed Pos Trq

Size	Setting Range	Setting Unit	Default Setting	Applicable Motors	When Enabled	Classification	Reference
2	-10000 to 10000	× 0.01	100	All	Immediately	Setup	510

◆ Pn553(2553h): Analog Monitor 2 Magnification

Speed Pos Trq

Size	Setting Range	Setting Unit	Default Setting	Applicable Motors	When Enabled	Classification	Reference
2	-10000 to 10000	× 0.01	100	All	Immediately	Setup	510

◆ Pn55A(255Ah): Power Consumption Monitor Unit Time

Speed Pos Trq

Size	Setting Range	Setting Unit	Default Setting	Applicable Motors	When Enabled	Classification	Reference
2	1 to 1440	1 min	1	All	Immediately	Setup	–

◆ Pn55C(255Ch): Specifying Output Status At a Host Comms Error Switch

Size	Setting Range	Setting Unit	Default Setting	Applicable Motors	When Enabled	Classification	Reference
2	0000h to 0001h	–	0001h	All	After restart	Setup	302

Digit	Meaning
n.□□□X	Specifying Output Status When a Host Communications Error Occurs Function Selection Speed Pos Trq
0	Disable the function to specify the output status when a host communications error occurs.
1 Default	Enable the function to specify the output status when a host communications error occurs.
n.□□X□	Reserved (Do not change.)
n.□X□□	Reserved (Do not change.)
n.X□□□	Reserved (Do not change.)

◆ Pn55D(255Dh): Specifying Output Status When a Host Comms Error Occurs

Speed Pos Trq

Size	Setting Range	Setting Unit	Default Setting	Applicable Motors	When Enabled	Classification	Reference
2	0000h to 001Fh	–	0000h	All	After restart	Setup	302

Bit	Meaning
Bit 0	Use the SO1 output (0: OFF when a host communications error occurs, 1: ON when a host communications occurs)
Bit 1	Use the SO2 output (0: OFF when a host communications error occurs, 1: ON when a host communications occurs)
Bit 2	Use the SO3 output (0: OFF when a host communications error occurs, 1: ON when a host communications occurs)
Bits 3 to 15	Reserved (Do not use.)

◆ Pn560(2560h): Residual Vibration Detection Width

Speed Pos Trq

Size	Setting Range	Setting Unit	Default Setting	Applicable Motors	When Enabled	Classification	Reference
2	1 to 3000	0.1%	400	All	Immediately	Setup	417

◆ Pn561(2561h): Overshoot Detection Level

Speed Pos Trq

Size	Setting Range	Setting Unit	Default Setting	Applicable Motors	When Enabled	Classification	Reference
2	0 to 1000	1%	100	All	Immediately	Setup	384, 400

◆ Pn562(2562h): Setting Gain Ratio

Speed Pos Trq

Size	Setting Range	Setting Unit	Default Setting	Applicable Motors	When Enabled	Classification	Reference
2	10 to 100	1%	80	All	Immediately	Tuning	384, 400

◆ Pn580(2580h): Zero Clamping Level

Speed Pos Trq

Size	Setting Range	Setting Unit	Default Setting	Applicable Motors	When Enabled	Classification	Reference
2	0 to 10000	1 mm/s	10	Linear	Immediately	Setup	–

◆ Pn581(2581h): Zero Speed Level

Speed Pos Trq

Size	Setting Range	Setting Unit	Default Setting	Applicable Motors	When Enabled	Classification	Reference
2	1 to 10000	1 mm/s	20	Linear	Immediately	Setup	237

◆ Pn582(2582h): Speed Coincidence Detection Signal Output Width

Speed Pos Trq

Size	Setting Range	Setting Unit	Default Setting	Applicable Motors	When Enabled	Classification	Reference
2	0 to 100	1 mm/s	10	Linear	Immediately	Setup	239

◆ Pn583(2583h): Brake Reference Output Speed Level

Speed Pos Trq

Size	Setting Range	Setting Unit	Default Setting	Applicable Motors	When Enabled	Classification	Reference
2	0 to 10000	1 mm/s	10	Linear	Immediately	Setup	200

◆ Pn584(2584h): Speed Limit Level at Servo ON

Speed Pos Trq

Size	Setting Range	Setting Unit	Default Setting	Applicable Motors	When Enabled	Classification	Reference
2	0 to 10000	1 mm/s	10000	Linear	Immediately	Setup	341

◆ Pn585(2585h): Program Jogging Movement Speed

Speed Pos Trq

Size	Setting Range	Setting Unit	Default Setting	Applicable Motors	When Enabled	Classification	Reference
2	1 to 10000	1 mm/s	50	Linear	Immediately	Setup	319

◆ Pn586(2586h): Motor Running Cooling Ratio

Speed Pos Trq

Size	Setting Range	Setting Unit	Default Setting	Applicable Motors	When Enabled	Classification	Reference
2	0 to 100	1% / Maximum Motor Speed	0	Linear	Immediately	Setup	–

◆ Pn587(2587h): Polarity Detection Selection for Absolute Linear Encoder

Size	Setting Range	Setting Unit	Default Setting	Applicable Motors	When Enabled	Classification	Reference
2	0000h to 0001h	–	0000h	Linear	Immediately	Setup	191

Digit	Meaning
n.□□□X	Polarity Detection Selection for Absolute Linear Encoder Speed Pos Trq
0 Default	Do not detect polarity.
1	Detect polarity.
n.□□X□	Reserved (Do not change.)
n.□X□□	Reserved (Do not change.)
n.X□□□	Reserved (Do not change.)

◆ Pn589(2589h): SigmaLINK II Node Detection Time

Speed Pos Trq

Size	Setting Range	Setting Unit	Default Setting	Applicable Motors	When Enabled	Classification	Reference
2	100 to 10000	1 ms	1500	All	After restart	Setup	–

◆ Pn590(2590h): P-OT (Forward Drive Prohibit Input) Signal Allocation

Size	Setting Range	Setting Unit	Default Setting	Applicable Motors	When Enabled	Classification	Reference
2	0000h to 3149h	–	1007h	All	After restart	Setup	195, 233

Digit	Meaning
n.□XXX	Allocated Pin Number Speed Pos Trq
007 Default	Allocate the signal to CN1-7.
008	Allocate the signal to CN1-8.
009	Allocate the signal to CN1-9.
010	Allocate the signal to CN1-10.
011	Allocate the signal to CN1-11.
012	Allocate the signal to CN1-12.
013	Allocate the signal to CN1-13.
100	Allocate the signal to SigmaLINK II Sequence Input 0.
101	Allocate the signal to SigmaLINK II Sequence Input 1.
102	Allocate the signal to SigmaLINK II Sequence Input 2.
103	Allocate the signal to SigmaLINK II Sequence Input 3.
104	Allocate the signal to SigmaLINK II Sequence Input 4.
105	Allocate the signal to SigmaLINK II Sequence Input 5.
106	Allocate the signal to SigmaLINK II Sequence Input 6.
107	Allocate the signal to SigmaLINK II Sequence Input 7.
Other values	Reserved (Do not use.)
n.X□□□	Polarity Selection Speed Pos Trq
0	Set the signal to always enable forward drive.
1 Default	Active when input signal is ON (closed).
2	Active when input signal is OFF (open).
3	Set the signal to always prohibit forward drive.

◆ Pn591(2591h): N-OT (Reverse Drive Prohibit Input) Signal Allocation

Size	Setting Range	Setting Unit	Default Setting	Applicable Motors	When Enabled	Classification	Reference
2	0000h to 3149h	–	1008h	All	After restart	Setup	195, 233

Digit	Meaning
n.□XXX	Allocated Pin Number Speed Pos Trq
007	Allocate the signal to CN1-7.
008 Default	Allocate the signal to CN1-8.
009	Allocate the signal to CN1-9.
010	Allocate the signal to CN1-10.
011	Allocate the signal to CN1-11.
012	Allocate the signal to CN1-12.
013	Allocate the signal to CN1-13.
100	Allocate the signal to SigmaLINK II Sequence Input 0.
101	Allocate the signal to SigmaLINK II Sequence Input 1.
102	Allocate the signal to SigmaLINK II Sequence Input 2.
103	Allocate the signal to SigmaLINK II Sequence Input 3.
104	Allocate the signal to SigmaLINK II Sequence Input 4.
105	Allocate the signal to SigmaLINK II Sequence Input 5.
106	Allocate the signal to SigmaLINK II Sequence Input 6.
107	Allocate the signal to SigmaLINK II Sequence Input 7.
Other values	Reserved (Do not use.)
n.X□□□	Polarity Selection Speed Pos Trq
0	Set the signal to always enable reverse drive.
1 Default	Active when input signal is ON (closed).
2	Active when input signal is OFF (open).
3	Set the signal to always prohibit reverse drive.

◆ Pn593(2593h): /Probe1 (Probe 1 Latch Input) Signal Allocation

Size	Setting Range	Setting Unit	Default Setting	Applicable Motors	When Enabled	Classification	Reference
2	0000h to2149h	–	1010h	All	After restart	Setup	–

Digit	Meaning
n.□XXX	Allocated Pin Number Speed Pos Trq
010 Default	Allocate the signal to CN1-10.
011	Allocate the signal to CN1-11.
012	Allocate the signal to CN1-12.
Other values	Reserved (Do not use.)
n.X□□□	Polarity Selection Speed Pos Trq
0	The signal is always inactive.
1 Default	Active when input signal is ON (closed).
2	Active when input signal is OFF (open).

◆ Pn594(2594h): /Probe2 (Probe 2 Latch Input) Signal Allocation

Size	Setting Range	Setting Unit	Default Setting	Applicable Motors	When Enabled	Classification	Reference
2	0000h to2149h	–	1011h	All	After restart	Setup	–

Digit	Meaning
n.□XXX	Allocated Pin Number Speed Pos Trq
010	Allocate the signal to CN1-10.
011 Default	Allocate the signal to CN1-11.
012	Allocate the signal to CN1-12.
Other values	Reserved (Do not use.)
n.X□□□	Polarity Selection Speed Pos Trq
0	The signal is always inactive.
1 Default	Active when input signal is ON (closed).
2	Active when input signal is OFF (open).

◆ Pn595(2595h): /Home (Home Switch Input) Signal Allocation

Size	Setting Range	Setting Unit	Default Setting	Applicable Motors	When Enabled	Classification	Reference
2	0000h to2149h	–	1012h	All	After restart	Setup	–

Digit	Meaning
n.□XXX	Allocated Pin Number Speed Pos Trq
010	Allocate the signal to CN1-10.
011	Allocate the signal to CN1-11.
012 Default	Allocate the signal to CN1-12.
Other values	Reserved (Do not use.)
n.X□□□	Polarity Selection Speed Pos Trq
0	The signal is always inactive.
1 Default	Active when input signal is ON (closed).
2	Active when input signal is OFF (open).

◆ Pn597(2597h): FSTP (Forced Stop Input) Signal Allocation

Size	Setting Range	Setting Unit	Default Setting	Applicable Motors	When Enabled	Classification	Reference
2	0000h to 3049h	–	0000h	All	After restart	Setup	283

Digit	Meaning
n.□XXX	Allocated Pin Number Speed Pos Trq
007	Allocate the signal to CN1-7.
008	Allocate the signal to CN1-8.
009	Allocate the signal to CN1-9.
010	Allocate the signal to CN1-10.
011	Allocate the signal to CN1-11.
012	Allocate the signal to CN1-12.
013	Allocate the signal to CN1-13.
Other values	Reserved (Do not use.)
n.X□□□	Polarity Selection Speed Pos Trq
0 Default	Set the signal to always enable drive (always disable forcing the motor to stop).
1	Enable drive when the input signal is ON (closed).
2	Enable drive when the input signal is OFF (open).
3	Set the signal to always prohibit drive (always force the motor to stop).

◆ Pn598(2598h): /P-CL (Forward External Torque Limit Input) Signal Allocation

Size	Setting Range	Setting Unit	Default Setting	Applicable Motors	When Enabled	Classification	Reference
2	0000h to 3149h	–	0000h	All	After restart	Setup	233, 257

Digit	Meaning
n.□XXX	Allocated Pin Number Speed Pos Trq
000 Default	The signal is always inactive.
007	Allocate the signal to CN1-7.
008	Allocate the signal to CN1-8.
009	Allocate the signal to CN1-9.
010	Allocate the signal to CN1-10.
011	Allocate the signal to CN1-11.
012	Allocate the signal to CN1-12.
013	Allocate the signal to CN1-13.
100	Allocate the signal to SigmaLINK II Sequence Input 0.
101	Allocate the signal to SigmaLINK II Sequence Input 1.
102	Allocate the signal to SigmaLINK II Sequence Input 2.
103	Allocate the signal to SigmaLINK II Sequence Input 3.
104	Allocate the signal to SigmaLINK II Sequence Input 4.
105	Allocate the signal to SigmaLINK II Sequence Input 5.
106	Allocate the signal to SigmaLINK II Sequence Input 6.
107	Allocate the signal to SigmaLINK II Sequence Input 7.
Other values	Reserved (Do not use.)
n.X□□□	Polarity Selection Speed Pos Trq
0 Default	The signal is always inactive.
1	Active when input signal is ON (closed).
2	Active when input signal is OFF (open).
3	The signal is always active.

◆ Pn599(2599h): /N-CL (Reverse External Torque Limit Input) Signal Allocation

Size	Setting Range	Setting Unit	Default Setting	Applicable Motors	When Enabled	Classification	Reference
2	0000h to 3149h	–	0000h	All	After restart	Setup	233, 257

Digit	Meaning
n.□XXX	Allocated Pin Number Speed Pos Trq
000 Default	The signal is always inactive.
007	Allocate the signal to CN1-7.
008	Allocate the signal to CN1-8.
009	Allocate the signal to CN1-9.
010	Allocate the signal to CN1-10.
011	Allocate the signal to CN1-11.
012	Allocate the signal to CN1-12.
013	Allocate the signal to CN1-13.
100	Allocate the signal to SigmaLINK II Sequence Input 0.
101	Allocate the signal to SigmaLINK II Sequence Input 1.
102	Allocate the signal to SigmaLINK II Sequence Input 2.
103	Allocate the signal to SigmaLINK II Sequence Input 3.
104	Allocate the signal to SigmaLINK II Sequence Input 4.
105	Allocate the signal to SigmaLINK II Sequence Input 5.
106	Allocate the signal to SigmaLINK II Sequence Input 6.
107	Allocate the signal to SigmaLINK II Sequence Input 7.
Other values	Reserved (Do not use.)
n.X□□□	Polarity Selection Speed Pos Trq
0 Default	The signal is always inactive.
1	Active when input signal is ON (closed).
2	Active when input signal is OFF (open).
3	The signal is always active.

◆ Pn5B0(25B0h): /COIN (Positioning Completion Output) Signal Allocation

Size	Setting Range	Setting Unit	Default Setting	Applicable Motors	When Enabled	Classification	Reference
2	0000h to 2039h	–	0000h	All	After restart	Setup	235, 240

Digit	Meaning
n.□XXX	Allocated Pin Number Speed Pos Trq
001	Allocate the signal to CN1-1.
023	Allocate the signal to CN1-23.
025	Allocate the signal to CN1-25.
Other values	Reserved (Do not use.)
n.X□□□	Polarity Selection Speed Pos Trq
0 Default	The signal is always inactive.
1	Output the above signal.
2	Invert the above signal and output it.

◆ Pn5B1(25B1h): /V-CMP (Speed Coincidence Detection Output) Signal Allocation

Size	Setting Range	Setting Unit	Default Setting	Applicable Motors	When Enabled	Classification	Reference
2	0000h to 2039h	–	0000h	All	After restart	Setup	235, 239

Digit	Meaning
n.□XXX	Allocated Pin Number Speed Pos Trq
001	Allocate the signal to CN1-1.
023	Allocate the signal to CN1-23.
025	Allocate the signal to CN1-25.
Other values	Reserved (Do not use.)
n.X□□□	Polarity Selection Speed Pos Trq
0 Default	The signal is always inactive.
1	Output the above signal.
2	Invert the above signal and output it.

◆ Pn5B2(25B2h): /TGON (Rotation Detection Output) Signal Allocation

Size	Setting Range	Setting Unit	Default Setting	Applicable Motors	When Enabled	Classification	Reference
2	0000h to 2039h	–	0000h	All	After restart	Setup	235, 237

Digit	Meaning
n.□XXX	Allocated Pin Number Speed Pos Trq
001	Allocate the signal to CN1-1.
023	Allocate the signal to CN1-23.
025	Allocate the signal to CN1-25.
Other values	Reserved (Do not use.)
n.X□□□	Polarity Selection Speed Pos Trq
0 Default	The signal is always inactive.
1	Output the above signal.
2	Invert the above signal and output it.

◆ Pn5B3(25B3h): /S-RDY (Servo Ready Output) Signal Allocation

Size	Setting Range	Setting Unit	Default Setting	Applicable Motors	When Enabled	Classification	Reference
2	0000h to 2039h	–	0000h	All	After restart	Setup	235, 238

Digit	Meaning
n.□XXX	Allocated Pin Number Speed Pos Trq
001	Allocate the signal to CN1-1.
023	Allocate the signal to CN1-23.
025	Allocate the signal to CN1-25.
Other values	Reserved (Do not use.)
n.X□□□	Polarity Selection Speed Pos Trq
0 Default	The signal is always inactive.
1	Output the above signal.
2	Invert the above signal and output it.

◆ Pn5B4(25B4h): /CLT (Torque Limit Detection Output) Signal Allocation

Size	Setting Range	Setting Unit	Default Setting	Applicable Motors	When Enabled	Classification	Reference
2	0000h to 2039h	–	0000h	All	After restart	Setup	235, 260

Digit	Meaning
n.□XXX	Allocated Pin Number Speed Pos Trq
001	Allocate the signal to CN1-1.
023	Allocate the signal to CN1-23.
025	Allocate the signal to CN1-25.
Other values	Reserved (Do not use.)
n.X□□□	Polarity Selection Speed Pos Trq
0 Default	The signal is always inactive.
1	Output the above signal.
2	Invert the above signal and output it.

◆ Pn5B5(25B5h): /VLT (Speed Limit Detection Output) Signal Allocation

Size	Setting Range	Setting Unit	Default Setting	Applicable Motors	When Enabled	Classification	Reference
2	0000h to 2039h	–	0000h	All	After restart	Setup	235, 242

Digit	Meaning
n.□XXX	Allocated Pin Number Speed Pos Trq
001	Allocate the signal to CN1-1.
023	Allocate the signal to CN1-23.
025	Allocate the signal to CN1-25.
Other values	Reserved (Do not use.)
n.X□□□	Polarity Selection Speed Pos Trq
0 Default	The signal is always inactive.
1	Output the above signal.
2	Invert the above signal and output it.

◆ Pn5B6(25B6h): /BK (Brake Output) Signal Allocation

Size	Setting Range	Setting Unit	Default Setting	Applicable Motors	When Enabled	Classification	Reference
2	0000h to 2039h	–	1001h	All	After restart	Setup	201, 235

Digit	Meaning
n.□XXX	Allocated Pin Number Speed Pos Trq
001 Default	Allocate the signal to CN1-1.
023	Allocate the signal to CN1-23.
025	Allocate the signal to CN1-25.
Other values	Reserved (Do not use.)
n.X□□□	Polarity Selection Speed Pos Trq
0	The signal is always inactive.
1 Default	Output the above signal.
2	Invert the above signal and output it.

◆ Pn5B7(25B7h): /WARN (Warning Output) Signal Allocation

Size	Setting Range	Setting Unit	Default Setting	Applicable Motors	When Enabled	Classification	Reference
2	0000h to 2039h	–	0000h	All	After restart	Setup	235, 237

Digit	Meaning
n.□XXX	Allocated Pin Number Speed Pos Trq
001	Allocate the signal to CN1-1.
023	Allocate the signal to CN1-23.
025	Allocate the signal to CN1-25.
Other values	Reserved (Do not use.)
n.X□□□	Polarity Selection Speed Pos Trq
0 Default	The signal is always inactive.
1	Output the above signal.
2	Invert the above signal and output it.

◆ Pn5B8(25B8h): /NEAR (Near Output) Signal Allocation

Size	Setting Range	Setting Unit	Default Setting	Applicable Motors	When Enabled	Classification	Reference
2	0000h to 2039h	–	0000h	All	After restart	Setup	235, 241

Digit	Meaning
n.□XXX	Allocated Pin Number Speed Pos Trq
001	Allocate the signal to CN1-1.
023	Allocate the signal to CN1-23.
025	Allocate the signal to CN1-25.
Other values	Reserved (Do not use.)
n.X□□□	Polarity Selection Speed Pos Trq
0 Default	The signal is always inactive.
1	Output the above signal.
2	Invert the above signal and output it.

◆ Pn5BC(25BCh): /PM (Preventative Maintenance Output) Signal Allocation

Size	Setting Range	Setting Unit	Default Setting	Applicable Motors	When Enabled	Classification	Reference
2	0000h to 2039h	–	0000h	All	After restart	Setup	516

Digit	Meaning
n.□XXX	Allocated Pin Number Speed Pos Trq
001	Allocate the signal to CN1-1.
023	Allocate the signal to CN1-23.
025	Allocate the signal to CN1-25.
Other values	Reserved (Do not use.)
n.X□□□	Polarity Selection Speed Pos Trq
0 Default	The signal is always inactive.
1	Output the above signal.
2	Invert the above signal and output it.

◆ Pn5C3(25C3h): Error Detection Setting

Size	Setting Range	Setting Unit	Default Setting	Applicable Motors	When Enabled	Classification	Reference
2	0000h to 0011h	–	0000h	All	After restart	Setup	523

Digit	Meaning
n.□□□X	Error Detection Selections Speed Pos Trq
0 Default	Disable error detection.
1	Enable error detection.
n.□□X□	Execution Selection when Error Detection Warning Speed Pos Trq
0 Default	Stop error detection when A.905 (Error Detection Warning) occurs.
1	Do not stop error detection when A.905 (Error Detection Warning) occurs.
n.□X□□	Reserved (Do not change.)
n.X□□□	Reserved (Do not change.)

◆ Pn5C4(25C4h): Error Detection Sample Data Set 1 Warning Level 1 Speed Pos Trq

Size	Setting Range	Setting Unit	Default Setting	Applicable Motors	When Enabled	Classification	Reference
2	0 to 10000	0.01%	2000	All	Immediately	Setup	523

◆ Pn5C5(25C5h): Error Detection Sample Data Set 1 Judgment Level 1 Speed Pos Trq

Size	Setting Range	Setting Unit	Default Setting	Applicable Motors	When Enabled	Classification	Reference
2	0 to 10000	–	1520	All	Immediately	Setup	523

◆ Pn5C6(25C6h): Error Detection Sample Data Set 1 Warning Level 2 Speed Pos Trq

Size	Setting Range	Setting Unit	Default Setting	Applicable Motors	When Enabled	Classification	Reference
2	0 to 10000	0.01%	2000	All	Immediately	Setup	523

◆ Pn5C7(25C7h): Error Detection Sample Data Set 1 Judgment Level 2 Speed Pos Trq

Size	Setting Range	Setting Unit	Default Setting	Applicable Motors	When Enabled	Classification	Reference
2	0 to 10000	–	1520	All	Immediately	Setup	523

◆ Pn5C8(25C8h): Error Detection Sample Data Set 2 Warning Level 1 Speed Pos Trq

Size	Setting Range	Setting Unit	Default Setting	Applicable Motors	When Enabled	Classification	Reference
2	0 to 10000	0.01%	2000	All	Immediately	Setup	523

◆ Pn5C9(25C9h): Error Detection Sample Data Set 2 Judgment Level 1 Speed Pos Trq

Size	Setting Range	Setting Unit	Default Setting	Applicable Motors	When Enabled	Classification	Reference
2	0 to 10000	–	1520	All	Immediately	Setup	523

◆ Pn5CA(25CAh): Error Detection Sample Data Set 2 Warning Level 2 Speed Pos Trq

Size	Setting Range	Setting Unit	Default Setting	Applicable Motors	When Enabled	Classification	Reference
2	0 to 10000	0.01%	2000	All	Immediately	Setup	523

◆ Pn5CB(25CBh): Error Detection Sample Data Set 2 Judgment Level 2 Speed Pos Trq

Size	Setting Range	Setting Unit	Default Setting	Applicable Motors	When Enabled	Classification	Reference
2	0 to 10000	–	1520	All	Immediately	Setup	523

◆ Pn5D7(25D7h): Output Signal Inversion for Triggers at Preset Positions

Size	Setting Range	Setting Unit	Default Setting	Applicable Motors	When Enabled	Classification	Reference
2	0000H to 01F7h	–	0000h	All	After restart	Setup	–

Digit	Meaning
n.□□□X	High-Speed Output Signal Inverse Settings for Triggers at Preset Positions Speed Pos Trq
0 Default	The signal is not inverted.
1	Invert CN1-17, -18 (PAO) and output it.
2	Invert CN1-19, -20 (PBO) and output it.
3	Invert CN1-17, -18 (PAO) and CN1-19, -20 (PBO) and output them.
4	Invert CN1-21, -22 (PCO) and output it.
5	Invert CN1-17, -18 (PAO) and CN1-21, -22 (PCO) and output them.
6	Invert CN1-19, -20 (PBO) and CN1-21, -22 (PCO) and output them.
7	Invert CN1-17, -18 (PAO), CN1-19, -20 (PBO), and CN1-21, -22 (PCO) and output them.
n.□□X□	Normal Output Signal Inverse Settings for Triggers at Preset Positions 1 Speed Pos Trq
0 Default	The signal is not inverted.
1	Invert CN1-1, -2 (SO1) and output it.
2	Invert CN1-23, -24 (SO2) and output it.
3	Invert CN1-1, -2 (SO1) and CN1-23, -24 (SO2) and output them.
4	Invert CN1-25, -26 (SO3) and output it.
5	Invert CN1-1, -2 (SO1) and CN1-25, -26 (SO3) and output them.
6	Invert CN1-23, -24 (SO2) and CN1-25, -26 (SO3) and output them.
7	Invert CN1-1, -2 (SO1), CN1-23, -24 (SO2), and CN1-25, -26 (SO3) and output them.
n.□X□□	Reserved (Do not change.)
n.X□□□	Reserved (Do not change.)

◆ Pn600(2600h): Regenerative Resistor Capacity Speed Pos Trq

Size	Setting Range	Setting Unit	Default Setting	Applicable Motors	When Enabled	Classification	Reference
2	0 to SERVOPACK's maximum applicable motor capacity	10 W	0	All	Immediately	Setup	223

◆ Pn601(2601h): Dynamic Brake Resistor Allowable Energy Consumption Speed Pos Trq

Size	Setting Range	Setting Unit	Default Setting	Applicable Motors	When Enabled	Classification	Reference
2	0 to 65535	10 J	0	All	After restart	Setup	–

◆ Pn603(2603h): Regenerative Resistance

Speed Pos Trq

Size	Setting Range	Setting Unit	Default Setting	Applicable Motors	When Enabled	Classification	Reference
2	0 to 65535	10 mΩ	0	All	Immediately	Setup	223

◆ Pn604(2604h): Dynamic Brake Resistance

Speed Pos Trq

Size	Setting Range	Setting Unit	Default Setting	Applicable Motors	When Enabled	Classification	Reference
2	0 to 65535	10 mΩ	0	All	After restart	Setup	–

◆ Pn61A(261Ah): Overheat Protection Selections

Size	Setting Range	Setting Unit	Default Setting	Applicable Motors	When Enabled	Classification	Reference
2	0000h to 0003h	–	0000h	Linear	After restart	Setup	286

Digit	Meaning
n.□□□X	Overheat Protection Selections Speed Pos Trq
0 Default	Disable overheat protection.
1	Use overheat protection in the Yaskawa linear servomotor.
2	Monitor a negative voltage input from a sensor attached to the machine and use overheat protection.
3	Monitor a positive voltage input from a sensor attached to the machine and use overheat protection.
n.□□X□	Reserved (Do not change.)
n.□X□□	Reserved (Do not change.)
n.X□□□	Reserved (Do not change.)

◆ Pn61B(261Bh): Overheat Alarm Level

Speed Pos Trq

Size	Setting Range	Setting Unit	Default Setting	Applicable Motors	When Enabled	Classification	Reference
2	0 to 500	0.01 V	250	All	Immediately	Setup	288

Note:

Valid only when Pn61A is set to n.□□□2 or n.□□□3 (enable overheat protection).

◆ Pn61C(261Ch): Overheat Warning Level

Speed Pos Trq

Size	Setting Range	Setting Unit	Default Setting	Applicable Motors	When Enabled	Classification	Reference
2	0 to 100	1%	100	All	Immediately	Setup	288

Note:

Valid only when Pn61A is set to n.□□□2 or n.□□□3 (enable overheat protection).

◆ Pn61D(261Dh): Overheat Alarm Filter Time

Speed Pos Trq

Size	Setting Range	Setting Unit	Default Setting	Applicable Motors	When Enabled	Classification	Reference
2	0 to 65535	1 s	0	All	Immediately	Setup	288

Note:

Valid only when Pn61A is set to n.□□□2 or n.□□□3 (enable overheat protection).

◆ Pn621(2621h): Reserved (Do not change.)

Speed Pos Trq

Size	Setting Range	Setting Unit	Default Setting	Applicable Motors	When Enabled	Classification	Reference
–	–	–	–	All	–	–	–

◆ Pn622(2622h): Reserved (Do not change.)

Speed Pos Trq

Size	Setting Range	Setting Unit	Default Setting	Applicable Motors	When Enabled	Classification	Reference
–	–	–	–	All	–	–	–

◆ Pn623(2623h): Reserved (Do not change.)

Speed Pos Trq

Size	Setting Range	Setting Unit	Default Setting	Applicable Motors	When Enabled	Classification	Reference
–	–	–	–	All	–	–	–

◆ Pn624(2624h): Reserved (Do not change.)

Speed Pos Trq

Size	Setting Range	Setting Unit	Default Setting	Applicable Motors	When Enabled	Classification	Reference
–	–	–	–	All	–	–	–

◆ Pn625(2625h): Reserved (Do not change.)

Speed Pos Trq

Size	Setting Range	Setting Unit	Default Setting	Applicable Motors	When Enabled	Classification	Reference
–	–	–	–	All	–	–	–

◆ Pn626(2626h): Reserved (Do not change.)

Speed Pos Trq

Size	Setting Range	Setting Unit	Default Setting	Applicable Motors	When Enabled	Classification	Reference
–	–	–	–	All	–	–	–

◆ Pn628(2628h): Reserved (Do not change.)

Speed Pos Trq

Size	Setting Range	Setting Unit	Default Setting	Applicable Motors	When Enabled	Classification	Reference
–	–	–	–	All	–	–	–

◆ Pn629(2629h): Slot Selections for Safety Module Monitors

Size	Setting Range	Setting Unit	Default Setting	Applicable Motors	When Enabled	Classification	Reference
2	0000h to 110Ah	–	0001h	All	–	Setup	–

Digit	Meaning	When Enabled
n.□□XX	Selection of Safety Function Slot to Monitor Speed Pos Trq	–
01 Default	Monitor safety function slot 1.	Immediately
02	Monitor safety function slot 2.	Immediately
03	Monitor safety function slot 3.	Immediately
04	Monitor safety function slot 4.	Immediately
05	Monitor safety function slot 5.	Immediately
06	Monitor safety function slot 6.	Immediately
07	Monitor safety function slot 7.	Immediately
08	Monitor safety function slot 8.	Immediately
09	Monitor safety function slot 9.	Immediately
0A	Monitor safety function slot A.	Immediately
n.□X□□	Reserved (Do not change.)	–
n.X□□□	Selection of Safety Module Warning Detection Speed Pos Trq	–
0 Default	Detect A.9C□ warnings.	After restart
1	Do not detect A.9C□ warnings.	After restart

Note:

This parameter is used when the advanced safety module is connected to the SERVOPACK. For details, refer to the following manual.

Σ-X-Series Advanced Safety Module with Safety over EtherCAT (FSoE) Communications References Product Manual (Manual No.: SIEP C710812 25)

Σ-X-Series AC Servo Drive Advanced Safety Module Digital I/O Product Manual (Manual No.: SIEP C710812 26)

◆ Pn660(2660h): Triggers at Preset Positions Switch

Size	Setting Range	Setting Unit	Default Setting	Applicable Motors	When Enabled	Classification	Reference
2	0000h to 2011h	–	0000h	All	After restart	Setup	–

Digit	Meaning
n.□□□X	Output Unit Setting Speed Pos Trq
0 Default	Set the signal output width as a time [μs].
1	Set the signal output width as a distance [reference units].
n.□□X□	Reserved (Do not change.)
n.□X□□	Reserved (Do not change.)
n.X□□□	Triggers at Preset Positions Selections Speed Pos Trq
0 Default	Disable triggers at preset positions.
1	Enable triggers at preset positions.
2	Reserved (Do not use.)

17.2 Object List

The following table lists the objects.

Information
- Save the parameter data to object 1010h to save all of the current parameter data to EEPROM.
  If the objects are modified by the digital operator or SigmaWin+, the data will be directly saved in EEPROM.
- The parameter numbers given in the table are the parameter numbers that are used with the digital operator and SigmaWin+.
- Refer to the following section for details on Pn000 to Pn6FF.
  ☞ *17.1.2 List of Parameters on page 755*
  Only the parameters listed in this section are displayed in SigmaWin+ and the digital operator.

Index	Subindex	Name	Data Type	Access	PDO Mapping	Saving to EEPROM	Default Value	Lower Limit	Upper Limit	Unit	Parameter No.
1000h	0	Device Type	UDINT	RO	No	No	0x00020192	–	–	–	–
1001h	0	Error Register	USINT	RO	No	No	–	–	–	–	–
1008h	0	Manufacturer Device Name	STRING	RO	No	No	–	–	–	–	–
100Ah	0	Manufacturer Software Version	STRING	RO	No	No	–	–	–	–	–
1010h	Store Parameters										
	0	Largest subindex supported	USINT	RO	No	No	4	–	–	–	–
	1	Save all parameters	UDINT	RW	No	No	0x00000001	0x00000000	0xFFFFFFFF	–	PnC00
	2	Reserved	UDINT	RW	No	No	0x00000001	–	–	–	–
	3	Reserved	UDINT	RW	No	No	0x00000001	–	–	–	–
	4	Reserved	UDINT	RW	No	No	0x00000001	–	–	–	–
1011h	Restore Default Parameters										
	0	Largest subindex supported	USINT	RO	No	No	4	–	–	–	–
	1	Restore all default parameters	UDINT	RW	No	No	0x00000001	0x00000000	0xFFFFFFFF	–	PnC08
	2	Reserved	UDINT	RW	No	No	0x00000001	–	–	–	–
	3	Reserved	UDINT	RW	No	No	0x00000001	–	–	–	–
	4	Reserved	UDINT	RW	No	No	0x00000001	–	–	–	–
1018h	Identity Object										
	0	Number of entries	USINT	RO	No	No	4	–	–	–	–
	1	Vendor ID	UDINT	RO	No	No	0x00000539	–	–	–	–
	2	Product code	UDINT	RO	No	No	0x02200901	–	–	–	–
	3	Revision number	UDINT	RO	No	No	–	–	–	–	–
	4	Serial number	UDINT	RO	No	No	0x00000000	–	–	–	–
10F1h	Sync Error Settings										
	0	Number of entries	USINT	RO	No	No	2	–	–	–	–
	1	Reserved (Local Error Reaction)	UDINT	RW	No	No	0	–	–	–	–
	2	Sync error count limit	UINT	RW	No	Yes	9	0	15	–	PnCCC

Continued on next page.

Continued from previous page.

Index	Subin-dex	Name	Data Type	Acc-ess	PDO Map-ping	Saving to EEPRO-M	Default Value	Lower Limit	Upper Limit	Unit	Parame-ter No.
1600h	1st Receive PDO Mapping										
	0	Number of objects in this PDO	USINT	RW	No	Yes	8	0	16	–	PnCA0
	1	Mapping entry 1	UDINT	RW	No	Yes	0x60400010	0	0xFFFFFFFF	–	PnC20
	2	Mapping entry 2	UDINT	RW	No	Yes	0x607A0020	0	0xFFFFFFFF	–	PnC22
	3	Mapping entry 3	UDINT	RW	No	Yes	0x60FF0020	0	0xFFFFFFFF	–	PnC24
	4	Mapping entry 4	UDINT	RW	No	Yes	0x60710010	0	0xFFFFFFFF	–	PnC26
	5	Mapping entry 5	UDINT	RW	No	Yes	0x60720010	0	0xFFFFFFFF	–	PnC28
	6	Mapping entry 6	UDINT	RW	No	Yes	0x60600008	0	0xFFFFFFFF	–	PnC2A
	7	Mapping entry 7	UDINT	RW	No	Yes	0x00000008	0	0xFFFFFFFF	–	PnC2C
	8	Mapping entry 8	UDINT	RW	No	Yes	0x60B80010	0	0xFFFFFFFF	–	PnC2E
	9	Mapping entry 9	UDINT	RW	No	Yes	0	0	0xFFFFFFFF	–	PnC30
	10	Mapping entry 10	UDINT	RW	No	Yes	0	0	0xFFFFFFFF	–	PnC32
	11	Mapping entry 11	UDINT	RW	No	Yes	0	0	0xFFFFFFFF	–	PnC34
	12	Mapping entry 12	UDINT	RW	No	Yes	0	0	0xFFFFFFFF	–	PnC36
	13	Mapping entry 13	UDINT	RW	No	Yes	0	0	0xFFFFFFFF	–	PnC38
	14	Mapping entry 14	UDINT	RW	No	Yes	0	0	0xFFFFFFFF	–	PnC3A
	15	Mapping entry 15	UDINT	RW	No	Yes	0	0	0xFFFFFFFF	–	PnC3C
	16	Mapping entry 16	UDINT	RW	No	Yes	0	0	0xFFFFFFFF	–	PnC3E
1601h	2nd Receive PDO Mapping										
	0	Number of objects in this PDO	USINT	RW	No	Yes	2	0	16	–	PnCA1
	1	Mapping entry 1	UDINT	RW	No	Yes	0x60400010	0	0xFFFFFFFF	–	PnC40
	2	Mapping entry 2	UDINT	RW	No	Yes	0x607A0020	0	0xFFFFFFFF	–	PnC42
	3	Mapping entry 3	UDINT	RW	No	Yes	0	0	0xFFFFFFFF	–	PnC44
	4	Mapping entry 4	UDINT	RW	No	Yes	0	0	0xFFFFFFFF	–	PnC46
	5	Mapping entry 5	UDINT	RW	No	Yes	0	0	0xFFFFFFFF	–	PnC48
	6	Mapping entry 6	UDINT	RW	No	Yes	0	0	0xFFFFFFFF	–	PnC4A
	7	Mapping entry 7	UDINT	RW	No	Yes	0	0	0xFFFFFFFF	–	PnC4C
	8	Mapping entry 8	UDINT	RW	No	Yes	0	0	0xFFFFFFFF	–	PnC4E
	9	Mapping entry 9	UDINT	RW	No	Yes	0	0	0xFFFFFFFF	–	PnC50
	10	Mapping entry 10	UDINT	RW	No	Yes	0	0	0xFFFFFFFF	–	PnC52
	11	Mapping entry 11	UDINT	RW	No	Yes	0	0	0xFFFFFFFF	–	PnC54
	12	Mapping entry 12	UDINT	RW	No	Yes	0	0	0xFFFFFFFF	–	PnC56
	13	Mapping entry 13	UDINT	RW	No	Yes	0	0	0xFFFFFFFF	–	PnC58
	14	Mapping entry 14	UDINT	RW	No	Yes	0	0	0xFFFFFFFF	–	PnC5A
	15	Mapping entry 15	UDINT	RW	No	Yes	0	0	0xFFFFFFFF	–	PnC5C
	16	Mapping entry 16	UDINT	RW	No	Yes	0	0	0xFFFFFFFF	–	PnC5E

Continued on next page.

Continued from previous page.

Index	Subin-dex	Name	Data Type	Acc-ess	PDO Map-ping	Saving to EEPRO-M	Default Value	Lower Limit	Upper Limit	Unit	Parame-ter No.
1602h	3rd Receive PDO Mapping										
	0	Number of objects in this PDO	USINT	RW	No	No	2	0	16	–	–
	1	Mapping entry 1	UDINT	RW	No	No	0x60400010	0	0xFFFFFFFF	–	–
	2	Mapping entry 2	UDINT	RW	No	No	0x60FF0020	0	0xFFFFFFFF	–	–
	3	Mapping entry 3	UDINT	RW	No	No	0	0	0xFFFFFFFF	–	–
	4	Mapping entry 4	UDINT	RW	No	No	0	0	0xFFFFFFFF	–	–
	5	Mapping entry 5	UDINT	RW	No	No	0	0	0xFFFFFFFF	–	–
	6	Mapping entry 6	UDINT	RW	No	No	0	0	0xFFFFFFFF	–	–
	7	Mapping entry 7	UDINT	RW	No	No	0	0	0xFFFFFFFF	–	–
	8	Mapping entry 8	UDINT	RW	No	No	0	0	0xFFFFFFFF	–	–
	9	Mapping entry 9	UDINT	RW	No	No	0	0	0xFFFFFFFF	–	–
	10	Mapping entry 10	UDINT	RW	No	No	0	0	0xFFFFFFFF	–	–
	11	Mapping entry 11	UDINT	RW	No	No	0	0	0xFFFFFFFF	–	–
	12	Mapping entry 12	UDINT	RW	No	No	0	0	0xFFFFFFFF	–	–
	13	Mapping entry 13	UDINT	RW	No	No	0	0	0xFFFFFFFF	–	–
	14	Mapping entry 14	UDINT	RW	No	No	0	0	0xFFFFFFFF	–	–
	15	Mapping entry 15	UDINT	RW	No	No	0	0	0xFFFFFFFF	–	–
	16	Mapping entry 16	UDINT	RW	No	No	0	0	0xFFFFFFFF	–	–
1603h	4th Receive PDO Mapping										
	0	Number of objects in this PDO	USINT	RW	No	No	2	0	16	–	–
	1	Mapping entry 1	UDINT	RW	No	No	0x60400010	0	0xFFFFFFFF	–	–
	2	Mapping entry 2	UDINT	RW	No	No	0x60710010	0	0xFFFFFFFF	–	–
	3	Mapping entry 3	UDINT	RW	No	No	0	0	0xFFFFFFFF	–	–
	4	Mapping entry 4	UDINT	RW	No	No	0	0	0xFFFFFFFF	–	–
	5	Mapping entry 5	UDINT	RW	No	No	0	0	0xFFFFFFFF	–	–
	6	Mapping entry 6	UDINT	RW	No	No	0	0	0xFFFFFFFF	–	–
	7	Mapping entry 7	UDINT	RW	No	No	0	0	0xFFFFFFFF	–	–
	8	Mapping entry 8	UDINT	RW	No	No	0	0	0xFFFFFFFF	–	–
	9	Mapping entry 9	UDINT	RW	No	No	0	0	0xFFFFFFFF	–	–
	10	Mapping entry 10	UDINT	RW	No	No	0	0	0xFFFFFFFF	–	–
	11	Mapping entry 11	UDINT	RW	No	No	0	0	0xFFFFFFFF	–	–
	12	Mapping entry 12	UDINT	RW	No	No	0	0	0xFFFFFFFF	–	–
	13	Mapping entry 13	UDINT	RW	No	No	0	0	0xFFFFFFFF	–	–
	14	Mapping entry 14	UDINT	RW	No	No	0	0	0xFFFFFFFF	–	–
	15	Mapping entry 15	UDINT	RW	No	No	0	0	0xFFFFFFFF	–	–
	16	Mapping entry 16	UDINT	RW	No	No	0	0	0xFFFFFFFF	–	–

Continued on next page.

Continued from previous page.

Index	Subin-dex	Name	Data Type	Acc-ess	PDO Map-ping	Saving to EEPRO-M	Default Value	Lower Limit	Upper Limit	Unit	Parame-ter No.
1A00h	1st Transmit PDO Mapping										
	0	Number of objects in this PDO	USINT	RW	No	Yes	8	0	16	–	PnCA4
	1	Mapping entry 1	UDINT	RW	No	Yes	0x60410010	0	0xFFFFFFFF	–	PnC60
	2	Mapping entry 2	UDINT	RW	No	Yes	0x60640020	0	0xFFFFFFFF	–	PnC62
	3	Mapping entry 3	UDINT	RW	No	Yes	0x60770010	0	0xFFFFFFFF	–	PnC64
	4	Mapping entry 4	UDINT	RW	No	Yes	0x60F40020	0	0xFFFFFFFF	–	PnC66
	5	Mapping entry 5	UDINT	RW	No	Yes	0x60610008	0	0xFFFFFFFF	–	PnC68
	6	Mapping entry 6	UDINT	RW	No	Yes	0x00000008	0	0xFFFFFFFF	–	PnC6A
	7	Mapping entry 7	UDINT	RW	No	Yes	0x60B90010	0	0xFFFFFFFF	–	PnC6C
	8	Mapping entry 8	UDINT	RW	No	Yes	0x60BA0020	0	0xFFFFFFFF	–	PnC6E
	9	Mapping entry 9	UDINT	RW	No	Yes	0	0	0xFFFFFFFF	–	PnC70
	10	Mapping entry 10	UDINT	RW	No	Yes	0	0	0xFFFFFFFF	–	PnC72
	11	Mapping entry 11	UDINT	RW	No	Yes	0	0	0xFFFFFFFF	–	PnC74
	12	Mapping entry 12	UDINT	RW	No	Yes	0	0	0xFFFFFFFF	–	PnC76
	13	Mapping entry 13	UDINT	RW	No	Yes	0	0	0xFFFFFFFF	–	PnC78
	14	Mapping entry 14	UDINT	RW	No	Yes	0	0	0xFFFFFFFF	–	PnC7A
	15	Mapping entry 15	UDINT	RW	No	Yes	0	0	0xFFFFFFFF	–	PnC7C
	16	Mapping entry 16	UDINT	RW	No	Yes	0	0	0xFFFFFFFF	–	PnC7E
1A01h	2nd Transmit PDO Mapping										
	0	Number of objects in this PDO	USINT	RW	No	Yes	2	0	16	–	PnCA5
	1	Mapping entry 1	UDINT	RW	No	Yes	0x60410010	0	0xFFFFFFFF	–	PnC80
	2	Mapping entry 2	UDINT	RW	No	Yes	0x60640020	0	0xFFFFFFFF	–	PnC82
	3	Mapping entry 3	UDINT	RW	No	Yes	0	0	0xFFFFFFFF	–	PnC84
	4	Mapping entry 4	UDINT	RW	No	Yes	0	0	0xFFFFFFFF	–	PnC86
	5	Mapping entry 5	UDINT	RW	No	Yes	0	0	0xFFFFFFFF	–	PnC88
	6	Mapping entry 6	UDINT	RW	No	Yes	0	0	0xFFFFFFFF	–	PnC8A
	7	Mapping entry 7	UDINT	RW	No	Yes	0	0	0xFFFFFFFF	–	PnC8C
	8	Mapping entry 8	UDINT	RW	No	Yes	0	0	0xFFFFFFFF	–	PnC8E
	9	Mapping entry 9	UDINT	RW	No	Yes	0	0	0xFFFFFFFF	–	PnC90
	10	Mapping entry 10	UDINT	RW	No	Yes	0	0	0xFFFFFFFF	–	PnC92
	11	Mapping entry 11	UDINT	RW	No	Yes	0	0	0xFFFFFFFF	–	PnC94
	12	Mapping entry 12	UDINT	RW	No	Yes	0	0	0xFFFFFFFF	–	PnC96
	13	Mapping entry 13	UDINT	RW	No	Yes	0	0	0xFFFFFFFF	–	PnC98
	14	Mapping entry 14	UDINT	RW	No	Yes	0	0	0xFFFFFFFF	–	PnC9A
	15	Mapping entry 15	UDINT	RW	No	Yes	0	0	0xFFFFFFFF	–	PnC9C
	16	Mapping entry 16	UDINT	RW	No	Yes	0	0	0xFFFFFFFF	–	PnC9E

Continued on next page.

Continued from previous page.

Index	Subin-dex	Name	Data Type	Acc-ess	PDO Map-ping	Saving to EEPRO-M	Default Value	Lower Limit	Upper Limit	Unit	Parame-ter No.
1A02h	3rd Transmit PDO Mapping										
	0	Number of objects in this PDO	USINT	RW	No	No	2	0	16	–	–
	1	Mapping entry 1	UDINT	RW	No	No	0x60410010	0	0xFFFFFFFF	–	–
	2	Mapping entry 2	UDINT	RW	No	No	0x60640020	0	0xFFFFFFFF	–	–
	3	Mapping entry 3	UDINT	RW	No	No	0	0	0xFFFFFFFF	–	–
	4	Mapping entry 4	UDINT	RW	No	No	0	0	0xFFFFFFFF	–	–
	5	Mapping entry 5	UDINT	RW	No	No	0	0	0xFFFFFFFF	–	–
	6	Mapping entry 6	UDINT	RW	No	No	0	0	0xFFFFFFFF	–	–
	7	Mapping entry 7	UDINT	RW	No	No	0	0	0xFFFFFFFF	–	–
	8	Mapping entry 8	UDINT	RW	No	No	0	0	0xFFFFFFFF	–	–
	9	Mapping entry 9	UDINT	RW	No	No	0	0	0xFFFFFFFF	–	–
	10	Mapping entry 10	UDINT	RW	No	No	0	0	0xFFFFFFFF	–	–
	11	Mapping entry 11	UDINT	RW	No	No	0	0	0xFFFFFFFF	–	–
	12	Mapping entry 12	UDINT	RW	No	No	0	0	0xFFFFFFFF	–	–
	13	Mapping entry 13	UDINT	RW	No	No	0	0	0xFFFFFFFF	–	–
	14	Mapping entry 14	UDINT	RW	No	No	0	0	0xFFFFFFFF	–	–
	15	Mapping entry 15	UDINT	RW	No	No	0	0	0xFFFFFFFF	–	–
	16	Mapping entry 16	UDINT	RW	No	No	0	0	0xFFFFFFFF	–	–
1A03h	4th Transmit PDO Mapping										
	0	Number of objects in this PDO	USINT	RW	No	No	3	0	16	–	–
	1	Mapping entry 1	UDINT	RW	No	No	0x60410010	0	0xFFFFFFFF	–	–
	2	Mapping entry 2	UDINT	RW	No	No	0x60640020	0	0xFFFFFFFF	–	–
	3	Mapping entry 3	UDINT	RW	No	No	0x60770010	0	0xFFFFFFFF	–	–
	4	Mapping entry 4	UDINT	RW	No	No	0	0	0xFFFFFFFF	–	–
	5	Mapping entry 5	UDINT	RW	No	No	0	0	0xFFFFFFFF	–	–
	6	Mapping entry 6	UDINT	RW	No	No	0	0	0xFFFFFFFF	–	–
	7	Mapping entry 7	UDINT	RW	No	No	0	0	0xFFFFFFFF	–	–
	8	Mapping entry 8	UDINT	RW	No	No	0	0	0xFFFFFFFF	–	–
	9	Mapping entry 9	UDINT	RW	No	No	0	0	0xFFFFFFFF	–	–
	10	Mapping entry 10	UDINT	RW	No	No	0	0	0xFFFFFFFF	–	–
	11	Mapping entry 11	UDINT	RW	No	No	0	0	0xFFFFFFFF	–	–
	12	Mapping entry 12	UDINT	RW	No	No	0	0	0xFFFFFFFF	–	–
	13	Mapping entry 13	UDINT	RW	No	No	0	0	0xFFFFFFFF	–	–
	14	Mapping entry 14	UDINT	RW	No	No	0	0	0xFFFFFFFF	–	–
	15	Mapping entry 15	UDINT	RW	No	No	0	0	0xFFFFFFFF	–	–
	16	Mapping entry 16	UDINT	RW	No	No	0	0	0xFFFFFFFF	–	–

Continued on next page.

Continued from previous page.

Index	Subin-dex	Name	Data Type	Acc-ess	PDO Map-ping	Saving to EEPRO-M	Default Value	Lower Limit	Upper Limit	Unit	Parame-ter No.
1C00h	Sync Manager Communication Type										
	0	Number of used Sync Manager channels	USINT	RO	No	No	4	–	–	–	–
	1	Communication type sync manager 0	USINT	RO	No	No	1 (mailbox receive (mas-ter → slave))	–	–	–	PnCB0
	2	Communication type sync manager 1	USINT	RO	No	No	2 (mailbox send (slave → master))	–	–	–	PnCB1
	3	Communication type sync manager 2	USINT	RO	No	No	3 (process data output (master → slave))	–	–	–	PnCB2
	4	Communication type sync manager 3	USINT	RO	No	No	4 (process data input (slave → master))	–	–	–	PnCB3
1C10h	0	Sync Manager PDO Assignment 0	USINT	RO	No	No	0	–	–	–	–
1C11h	0	Sync Manager PDO Assignment 1	USINT	RO	No	No	0	–	–	–	–
1C12h	Sync Manager PDO Assignment 2										
	0	Number of assigned PDOs	USINT	RO	No	Yes	1	0	2	–	PnCB5
	1	Index of assigned RxPDO 1	UINT	RW	No	Yes	0x1601	0x1600	0x1603	–	PnCB6
	2	Index of assigned RxPDO 2	UINT	RW	No	Yes	0x1600	0x1600	0x1603	–	PnCB7
1C13h	Sync Manager PDO Assignment 3										
	0	Number of assigned PDOs	USINT	RO	No	Yes	1	0	2	–	PnCBB
	1	Index of assigned TxPDO 1	UINT	RW	No	Yes	0x1A01	0x1A00	0x1A03	–	PnCBC
	2	Index of assigned TxPDO 2	UINT	RW	No	Yes	0x1A00	0x1A00	0x1A03	–	PnCBD

Continued on next page.

Continued from previous page.

Index	Subin-dex	Name	Data Type	Acc-ess	PDO Map-ping	Saving to EEPRO-M	Default Value	Lower Limit	Upper Limit	Unit	Parame-ter No.
1C32h	Sync Manager 2 (process data output) Synchronization										
	0	Number of Synchroni-zation Parameters	USINT	RO	No	No	32	–	–	–	–
	1	Synchronization type	UINT	RO	No	No	2	–	–	–	PnCC0
	2	Cycle time	UDINT	RO	No	No	–	–	–	ns	PnCC2
	3	Shift time	UDINT	RW	No	Yes	62500	62500	Sync0 event cycle	ns	PnCC4
	4	Synchronization types supported	UINT	RO	No	No	0x0025	–	–	–	–
	5	Minimum cycle time	UDINT	RO	No	No	62500	–	–	ns	–
	6	Calc and copy time	UDINT	RO	No	No	62500	–	–	ns	–
	7	Reserved (Minimum Delay Time)	UDINT	RO	No	No	0	–	–	–	–
	8	Reserved (Get Cycle Time)	UINT	RO	No	No	0	–	–	–	–
	9	Delay time	UDINT	RO	No	No	0	–	–	ns	–
	10	Sync0 cycle time	UDINT	RO	No	No	–	–	–	–	PnCC6
	11	SM event missed counter	UINT	RO	No	No	–	–	–	–	PnCC8
	12	Reserved (Cycle Time Too Small)	UINT	RO	No	No	0	–	–	–	–
	13	Reserved (Shift Time Too Short)	UINT	RO	No	No	0	–	–	–	–
	14	Reserved (RxPDO Tog-gle Failed)	UINT	RO	No	No	0	–	–	–	–
	15	Reserved (Minimum Cycle Distance)	UDINT	RO	No	No	0	–	–	–	–
	16	Reserved (Maximum Cycle Distance)	UDINT	RO	No	No	0	–	–	–	–
	17	Minimum SM SYNC distance	UDINT	RO	No	No	–	–	–	–	PnCD8
	18	Maximum SM SYNC distance	UDINT	RO	No	No	–	–	–	–	PnCD6
	32	Sync Error	BOOL	RO	No	No	0	–	–	–	–

Continued on next page.

Continued from previous page.

Index	Subin-dex	Name	Data Type	Acc-ess	PDO Map-ping	Saving to EEPRO-M	Default Value	Lower Limit	Upper Limit	Unit	Parame-ter No.
1C33h	Sync Manager 3 (process data input) Synchronization										
	0	Number of Synchroni-zation Parameters	USINT	RO	No	No	32	–	–	–	–
	1	Synchronization type	UINT	RO	No	No	–	–	–	–	–
	2	Cycle time	UDINT	RO	No	No	–	–	–	–	–
	3	Shift time	UDINT	RW	No	Yes	0	0	Sync0 event cycle - 62500	ns	PnCCA
	4	Synchronization types supported	UINT	RO	No	No	0x0025	–	–	–	–
	5	Minimum cycle time	UDINT	RO	No	No	62500	–	–	ns	–
	6	Calc and copy time	UDINT	RO	No	No	62500	–	–	ns	–
	7	Reserved (Minimum Delay Time)	UDINT	RO	No	No	0	–	–	–	–
	8	Reserved (Get Cycle Time)	UINT	RO	No	No	0	–	–	–	–
	9	Delay time	UDINT	RO	No	No	0	–	–	–	–
	10	Sync0 cycle time	UDINT	RO	No	No	–	–	–	–	–
	11	SM event missed counter	UINT	RO	No	No	–	–	–	–	–
	12	Reserved (Cycle Time Too Small)	UINT	RO	No	No	0	–	–	–	–
	13	Reserved (Shift Time Too Short)	UINT	RO	No	No	0	–	–	–	–
	14	Reserved (RxPDO Tog-gle Failed)	UINT	RO	No	No	0	–	–	–	–
	15	Reserved (Minimum Cycle Distance)	UDINT	RO	No	No	0	–	–	–	–
	16	Reserved (Maximum Cycle Distance)	UDINT	RO	No	No	0	–	–	–	–
	17	Minimum SM SYNC distance	UDINT	RO	No	No	–	–	–	–	PnCD8
	18	Maximum SM SYNC distance	UDINT	RO	No	No	–	–	–	–	PnCD6
	32	Sync Error	BOOL	RO	No	No	0	–	–	–	–
2000h to 26FFh	0	SERVOPACK Parame-ter (Pn000 (2000h) - Pn6FF (26FFh))	–	–	–	–	–	–	–	–	Pn000-Pn6FF
2700h	0	User Parameter Configuration	UDINT	RW	No	No	0	0	0xFFFFFFFF	–	PnB00
2701h	Position User Unit										
	0	Number of entries	USINT	RO	No	No	2	–	–	–	–
	1	Numerator	UDINT	RW	No	Yes	64	1	1073741824	–	Pn20E
	2	Denominator	UDINT	RW	No	Yes	1	1	1073741824	–	Pn210

Continued on next page.

Continued from previous page.

Index	Subin-dex	Name	Data Type	Acc-ess	PDO Map-ping	Saving to EEPRO-M	Default Value	Lower Limit	Upper Limit	Unit	Parame-ter No.
2702h	Velocity User Unit										
	0	Number of entries	USINT	RO	No	No	2	–	–	–	–
	1	Numerator	UDINT	RW	No	Yes	64	1	1073741823	–	PnB06
	2	Denominator	UDINT	RW	No	Yes	1	1	1073741823	–	PnB08
2703h	Acceleration User Unit										
	0	Number of entries	USINT	RO	No	No	2	–	–	–	–
	1	Numerator	UDINT	RW	No	Yes	64	1	1073741823	–	PnB0A
	2	Denominator	UDINT	RW	No	Yes	1	1	1073741823	–	PnB0C
2704h	Torque User Unit										
	0	Number of entries	USINT	RO	No	No	2	–	–	–	–
	1	Numerator	UDINT	RW	No	Yes	1	1	1073741823	–	PnB94
	2	Denominator	UDINT	RW	No	Yes	10	1	1073741823	–	PnB96
2710h	SERVOPACK Adjusting Command										
	0	Number of entries	USINT	RO	No	No	3	–	–	–	–
	1	Command	STRIN-G	RW	No	No	–	–	–	–	–
	2	Status	USINT	RO	No	No	–	–	–	–	–
	3	Reply	STRIN-G	RO	No	No	–	–	–	–	–
2730h	Interpolation Data Configuration for 1st Profile										
	0	Number of entries	USINT	RO	No	No	9	–	–	–	–
	1	Maximum buffer size	UDINT	RO	No	No	254	–	–	–	–
	2	Actual buffer size	UDINT	RW	No	No	254	–	–	–	–
	3	Buffer organization	USINT	RW	No	No	0	0	1	–	PnCEC
	4	Buffer position	UINT	RW	Yes	No	1	1	254	–	PnCED
	5	Size of data record	USINT	WO	No	No	1	1	1	–	–
	6	Buffer clear	USINT	WO	No	No	0	0	1	–	–
	7	Position data definition	USINT	RW	Yes	No	1	0	1	–	PnCEE
	8	Position data polarity	USINT	RW	Yes	No	0	0	1	–	PnCEF
	9	Behavior after reaching buffer position	USINT	RW	Yes	No	0	0	1	–	PnCF0

Continued on next page.

Continued from previous page.

Index	Subin-dex	Name	Data Type	Acc-ess	PDO Map-ping	Saving to EEPRO-M	Default Value	Lower Limit	Upper Limit	Unit	Parame-ter No.
2731h	Interpolation Data Configuration for 2nd Profile										
	0	Number of entries	USINT	RO	No	No	9	–	–	–	–
	1	Maximum buffer size	UDINT	RO	No	No	254	–	–	–	–
	2	Actual buffer size	UDINT	RW	No	No	254	–	–	–	–
	3	Buffer organization	USINT	RW	No	No	0	0	1	–	PnCF1
	4	Buffer position	UINT	RW	Yes	No	1	1	254	–	PnCF2
	5	Size of data record	USINT	WO	No	No	1	1	1	–	–
	6	Buffer clear	USINT	WO	No	No	0	0	1	–	–
	7	Position data definition	USINT	RW	Yes	No	1	0	1	–	PnCF3
	8	Position data polarity	USINT	RW	Yes	No	0	0	1	–	PnCF4
	9	Behavior after reaching buffer position	USINT	RW	Yes	No	0	0	1	–	PnCF5
2732h	0	Interpolation Profile Select	USINT	RW	Yes	No	0	0	1	–	PnCF6
2741h	Interpolation Data Read/Write Pointer Position Monitor										
	0	Number of entries	USINT	RO	No	No	2	–	–	–	–
	1	Interpolation data read pointer Position	UINT	RO	Yes	No	–	1	254	–	PnCF7
	2	Interpolation data write pointer Position	UINT	RO	Yes	No	–	1	254	–	PnCF8

Continued on next page.

Continued from previous page.

Index	Subin-dex	Name	Data Type	Acc-ess	PDO Map-ping	Saving to EEPRO-M	Default Value	Lower Limit	Upper Limit	Unit	Parame-ter No.
2770h	Sensing Data Monitor										
	0	Number of entries	USINT	RO	No	No	21	–	–	–	–
	1	Estimated vibration	DINT	RO	Yes	No	–	–	–	Over-speed dete-ction spee-d/ 100-000-0h	–
	2	Estimated external dis-turbance torque	DINT	RO	Yes	No	–	–	–	Max-imu-m tor-que/ 100-000-0h	–
	3	Main circuit DC voltage	INT	RO	Yes	No	–	–	–	V	–
	4	Un009: Accumulated Load Ratio	UINT	RO	No	No	–	–	–	%	–
	5	Un00A: Regenerative Load Ratio	UINT	RO	No	No	–	–	–	%	–
	6	Un078: Maximum Value of Amplitude of Estimated Vibration	INT	RO	No	No	–	–	–	min^{-1}	–
	7	Un07A: Maximum Value of Estimated External Disturbance Torque	INT	RO	No	No	–	–	–	%	–
	8	Un07B: Minimum Value of Estimated External Disturbance Torque	INT	RO	No	No	–	–	–	%	–
	9	Un07C: Identified Moment of Inertia Ratio	UDINT	RO	Yes	No	–	–	–	–	–
	10	Un104: Number of Serial Encoder Commu-nications Errors	UINT	RO	No	No	–	–	–	Time	–

Continued on next page.

Continued from previous page.

Index	Subin-dex	Name	Data Type	Acc-ess	PDO Map-ping	Saving to EEPRO-M	Default Value	Lower Limit	Upper Limit	Unit	Parame-ter No.
2770h	Sensing Data Monitor										
	11	Un105: Settling Time	UINT	RO	No	No	–	–	–	0.1 ms	–
	12	Un106: Amount of Overshoot	UDINT	RO	No	No	–	–	–	Pos. unit	–
	13	Un107: Residual Vibra-tion Frequency	UINT	RO	No	No	–	–	–	0.1 Hz	–
	14	Un108: Maximum Set-tling Time	UINT	RO	No	No	–	–	–	0.1 ms	–
	15	Un109: Maximum Amount of Overshoot	UDINT	RO	No	No	–	–	–	Pos. unit	–
	16	Un145: Maximum Value of Accumulated Load Ratio	UINT	RO	No	No	–	–	–	%	–
	17	Un14E: Margin until Overload	INT	RO	Yes	No	–	–	–	0.01-%	–
	18	Reserved	UDINT	RO	Yes	No	–	–	–	–	–
	19	Reserved	UDINT	RO	Yes	No	–	–	–	–	–
	20	Error detection trace counter	UDINT	RO	No	No	–	–	–	–	–
	21	Error detection trace error rate	UDINT	RO	No	No	–	–	–	–	–
	22	Un13C: Margin until Regenerative Overload	INT	RO	No	No	–	–	–	0.01-%	–
	23	Un13E: Margin until Undervoltage	INT	RO	No	No	–	–	–	V	–
	24	Un13F: Margin until Overvoltage	INT	RO	Yes	No	–	–	–	V	–
	25	Un173: Temperature Margin until SERVO-PACK Overheats	INT	RO	No	No	–	–	–	°C	–
	26	Reserved	UDINT	RO	Yes	No	–	–	–	–	–

Continued on next page.

Continued from previous page.

Index	Subin-dex	Name	Data Type	Acc-ess	PDO Map-ping	Saving to EEPRO-M	Default Value	Lower Limit	Upper Limit	Unit	Parame-ter No.
2771h	Sensing Data Monitor (Motor)										
	0	Number of entries	USINT	RO	No	No	13	–	–	–	–
	1	Un174: Temperature Margin until Servomotor Overheats	INT	RO	No	No	–	–	–	°C	–
	2	Un177: Encoder Power Supplied Time	UDINT	RO	No	No	–	–	–	100 ms	–
	3	Reserved	UINT	RO	No	No	–	–	–	–	–
	4	Un17A: Encoder Power Supply Voltage	INT	RO	No	No	–	–	–	0.1 V	–
	5	Un17B: Encoder Battery Voltage	UINT	RO	No	No	–	–	–	0.1 V	–
	6	Un181: Motor Total Number of Rotations	UDINT	RO	No	No	–	–	–	100 rev	–
	7	Un183: Maintenance Prediction Monitor - Bearings	UINT	RO	No	No	–	–	–	0.01-%	–
	8	Un184: Maintenance Prediction Monitor - Oil Seal	UINT	RO	No	No	–	–	–	0.01-%	–
	9	Un190: Motor Vibration in X-Axis Direction	DINT	RO	Yes	No	–	–	–	0.00-01 G	–
	10	Un191: Motor Vibration in Y-Axis Direction	DINT	RO	Yes	No	–	–	–	0.00-01 G	–
	11	Un192: Motor Vibration in Z-Axis Direction	DINT	RO	Yes	No	–	–	–	0.00-01 G	–
	12	Un193: Motor Vibration XYZ Composite Value	UDINT	RO	Yes	No	–	–	–	0.00-01 G	–
	13	Un194: Maximum Motor Vibration	UDINT	RO	No	No	–	–	–	0.00-01 G	–
	14	Linear Motor Overheat Protection Input	INT	RO	No	No	–	–	–	0.01 V	–

Continued on next page.

Continued from previous page.

Index	Subin-dex	Name	Data Type	Acc-ess	PDO Map-ping	Saving to EEPRO-M	Default Value	Lower Limit	Upper Limit	Unit	Parame-ter No.
2772h	Operation Status Monitor										
	0	Number of entries	USINT	RO	No	No	9	–	–	–	–
	1	Un025: SERVOPACK Installation Environ-ment Monitor	INT	RO	No	No	–	–	–	%	–
	2	Un026: Servomotor Installation Environ-ment Monitor	INT	RO	No	No	–	–	–	%	–
	3	Un027: Built-in Fan Remaining Life Ratio	UINT	RO	No	No	–	–	–	0.01-%	–
	4	Un028: Capacitor Remaining Life Ratio	UINT	RO	No	No	–	–	–	0.01-%	–
	5	Un029: Surge Preven-tion Circuit Remaining Life Ratio	UINT	RO	No	No	–	–	–	0.01-%	–
	6	Un02A: Dynamic Brake Circuit Remaining Life Ratio	UINT	RO	No	No	–	–	–	0.01-%	–
	7	Un032: Instantaneous Power	INT	RO	No	No	–	–	–	W	–
	8	Un033: Power Consumption	DINT	RO	No	No	–	–	–	0.001 Wh	–
	9	Un034: Cumulative Power Consumption	DINT	RO	No	No	–	–	–	Wh	–
2773h	Σ-LINK II Response Data										
	0	Number of entries	USINT	RO	No	No	11	–	–	–	–
	1	Σ-LINK II response data 1	UDINT	RO	Yes	No	–	–	–	–	–
	2	Σ-LINK II response data 2	UDINT	RO	Yes	No	–	–	–	–	–
	3	Σ-LINK II response data 3	UDINT	RO	Yes	No	–	–	–	–	–
	4	Σ-LINK II response data 4	UDINT	RO	Yes	No	–	–	–	–	–
	5	Σ-LINK II response data 5	UDINT	RO	Yes	No	–	–	–	–	–
	6	Σ-LINK II response data 6	UDINT	RO	Yes	No	–	–	–	–	–
	7	Σ-LINK II response data 7	UDINT	RO	Yes	No	–	–	–	–	–
	8	Σ-LINK II response data 8	UDINT	RO	Yes	No	–	–	–	–	–
	9	Σ-LINK II data status information	UDINT	RO	Yes	No	–	–	–	–	–
	10	Reserved	UDINT	RO	Yes	No	–	–	–	–	–
	11	Reserved	UDINT	RO	Yes	No	–	–	–	–	–

Continued on next page.

Continued from previous page.

Index	Subin-dex	Name	Data Type	Acc-ess	PDO Map-ping	Saving to EEPRO-M	Default Value	Lower Limit	Upper Limit	Unit	Parame-ter No.
2774h	Σ-LINK II Command Data										
	0	Number of entries	USINT	RO	No	No	4	–	–	–	–
	1	Σ-LINK II command data 1	UDINT	RW	Yes	No	–	0h	FFFFFFFFh	–	–
	2	Σ-LINK II command data 2	UDINT	RW	Yes	No	–	0h	FFFFFFFFh	–	–
	3	Σ-LINK II command data 3	UDINT	RW	Yes	No	–	0h	FFFFFFFFh	–	–
	4	Σ-LINK II command data 4	UDINT	RW	Yes	No	–	0h	FFFFFFFFh	–	–
2775h	Position Reference Filter										
	0	Number of entries	USINT	RO	No	No	2	–	–	–	–
	1	Movement Average Time	UINT	RW	No	Yes	0	0	5100	0.1 ms	PnBC4
	2	Reserved	UINT	RW	No	Yes	–	–	–	–	–
2776h	0	Controlword_VenderS	UINT	RW	Yes	No	–	0	0xFFFF	–	–
2778h	Output Position Setting										
	0	Number of entries	USINT	RO	No	No	32	–	–	–	–
	1 to 6	Output Position1 to Output Position6	DINT	RW	Yes	No	0	-2147483648	2147483647	Pos. unit	–
	7 to 32	Output Position7 to Output Position32	DINT	RW	No	No	0	-2147483648	2147483647	Pos. unit	–
2779h	Output Function Setting										
	0	Number of entries	USINT	RO	No	No	32	–	–	–	–
	1 to 32	Output Function1 to Output Function32	UDINT	RW	No	No	0	0x00000000	0x00001282	–	–
277Ah	Output Time Setting										
	0	Number of entries	USINT	RO	No	No	32	–	–	–	–
	1 to 32	Output Time1 to Output Time32	UDINT	RW	No	No	0	0	32767000	μs	-
277Bh	Output Distance Setting										
	0	Number of entries	USINT	RO	No	No	32	–	–	–	–
	1 to 32	Output Distance1 to Output Distance32	UDINT	RW	No	No	0	0	0x7FFFFFFF	Pos. unit	–
277Ch	Output Position Correction Setting										
	0	Number of entries	USINT	RO	No	No	32	–	–	–	–
	1 to 32	Output Position Compensation1 to Output Position Compensation32	DINT	RW	No	No	0	-2147483648	2147483647	Pos. unit	–
27C0h	Interpolation Data Record for 1st Profile										
	0	Number of entries	USINT	RO	No	No	254	–	–	–	–
	1 to 254	1st set-point to 254 set-point	DINT	RW	No	No	0	-2147483648	2147483647	–	–

Continued on next page.

Continued from previous page.

Index	Subin-dex	Name	Data Type	Acc-ess	PDO Map-ping	Saving to EEPRO-M	Default Value	Lower Limit	Upper Limit	Unit	Parame-ter No.
27C1h	Interpolation Data Record for 2nd Profile										
	0	Number of entries	USINT	RO	No	No	254	–	–	–	–
	1 to 254	1st set-point to 254 set-point	DINT	RW	No	No	0	-2147483648	2147483647	–	–
27E0h	–	Diag.Mode	UINT	RW	No	No	0	0	0xFFFF	–	PnCFE
27E4h	–	Absolute Encoder Origin Offset	DINT	RW	No	Yes	0	-2147483648	2147483647	–	PnB76
603Fh	0	Error Code	UINT	RO	Yes	No	–	–	–	–	PnB10
6040h	0	Controlword	UINT	RW	Yes	No	0	0	0xFFFF	–	PnB11
6041h	0	Statusword	UINT	RO	Yes	No	–	–	–	–	PnB12
605Ah	0	Quick Stop Option Code	INT	RW	No	Yes	2	0	4	–	PnB13
605Bh	0	Shutdown Option Code	INT	RW	No	Yes	0	0	1	–	PnB14
605Ch	0	Disable Operation Option Code	INT	RW	No	Yes	1	0	1	–	PnB15
605Dh	0	Halt Option Code	INT	RW	No	Yes	1	-3	3	–	PnB16
605Eh	0	Fault Reaction Option Code	INT	RW	No	Yes	0	0	0	–	PnB17
6060h	0	Modes of Operation	SINT	RW	Yes	Yes	0	0	10	–	PnB18
6061h	0	Modes of Operation Display	SINT	RO	Yes	No	0	–	–	–	PnB19
6062h	0	Position Demand Value	DINT	RO	Yes	No	–	–	–	Pos. unit	PnB20
6063h	0	Position Actual Internal Value	DINT	RO	Yes	No	–	–	–	Inc	PnB22
6064h	0	Position Actual Value	DINT	RO	Yes	No	–	–	–	Pos. unit	PnB24
6065h	0	Following Error Window	UDINT	RW	No	Yes	5242880	0	1073741823	Pos. unit	PnB26
6066h	0	Following Error Time Out	UINT	RW	No	Yes	0	0	65535	ms	PnB28
6067h	0	Position Window	UDINT	RW	No	Yes	30	0	1073741823	Pos. unit	PnB2A
6068h	0	Position Window Time	UINT	RW	No	Yes	0	0	65535	ms	PnB2C
606Bh	0	Velocity Demand Value	DINT	RO	Yes	No	–	–	–	Vel. unit	PnB2E
606Ch	0	Velocity Actual Value	DINT	RO	Yes	No	–	–	–	Vel. unit	PnB30
606Dh	0	Velocity Window	UINT	RW	No	Yes	20000	0	65535	Vel. unit	PnB32
606Eh	0	Velocity Window Time	UINT	RW	No	Yes	0	0	65535	ms	PnB34
6071h	0	Target Torque	INT	RW	Yes	No	0	-32768	32767	Trq. unit	PnB36
6072h	0	Max Torque	UINT	RW	Yes	No	Motor max torque	0	65535	Trq. unit	PnB38
6074h	0	Torque Demand Value	INT	RO	Yes	No	–	–	–	Trq. unit	PnB3A

Continued on next page.

Continued from previous page.

Index	Subin-dex	Name	Data Type	Acc-ess	PDO Map-ping	Saving to EEPRO-M	Default Value	Lower Limit	Upper Limit	Unit	Parame-ter No.
6076h	0	Motor Rated Torque	UDINT	RO	No	No	–	–	–	mN·-m, mN	PnB3C
6077h	0	Torque Actual Value	INT	RO	Yes	No	–	–	–	Trq. unit	PnB3E
6078h	0	Current Actual Value	INT	RO	Yes	No	–	–	–	1/1000 of rated cur-rent	–
607Ah	0	Target Position	DINT	RW	Yes	No	0	-2147483648	2147483647	Pos. unit	PnB40
607Bh	Position Range Limit										
	0	Number of entries	USINT	RO	No	No	2	–	–	–	–
	1	Min position range limit	DINT	RW	Yes	Yes	0	-2147483648	0	Pos. unit	PnBBE
	2	Max position range limit	DINT	RW	Yes	Yes	0	0	2147483647	Pos. unit	PnBC0
607Ch	–	Home Offset	DINT	RW	No	Yes	0	-536870912	536870911	Pos. unit	PnB46
607Dh	Software Position Limit										
	0	Number of entries	USINT	RO	No	No	2	–	–	–	–
	1	Min position limit	DINT	RW	No	Yes	0	-1073741823	1073741823	Pos. unit	PnB48
	2	Max position limit	DINT	RW	No	Yes	0	-1073741823	1073741823	Pos. unit	PnB4A
607Fh	0	Max Profile Velocity	UDINT	RW	Yes	Yes	2147483647	0	4294967295	Vel. unit	PnB4C
6081h	0	Profile Velocity	UDINT	RW	Yes	Yes	0	0	4294967295	Vel. unit	PnB4E
6082h	0	End Velocity	UDINT	RW	Yes	No	0	0	4294967295	Vel. unit	–
6083h	0	Profile Acceleration	UDINT	RW	Yes	Yes	1000	0	4294967295	Acc. unit	PnB50
6084h	0	Profile Deceleration	UDINT	RW	Yes	Yes	1000	0	4294967295	Acc. unit	PnB52
6085h	0	Quick Stop Deceleration	UDINT	RW	Yes	Yes	1000	0	4294967295	Acc. unit	PnB54
6086h	0	Motion Profile Type	INT	RW	Yes	Yes	0	-32768	32767	–	PnB98
6087h	0	Torque Slope	UDINT	RW	Yes	Yes	1000	0	4294967295	Trq. unit/s	PnB56
6098h	0	Homing Method	SINT	RW	Yes	No	37	0	37	–	PnB58
6099h	Homing Speeds										
	0	Number of entries	USINT	RO	No	No	2	–	–	–	–
	1	Speed during search for switch	UDINT	RW	Yes	Yes	500000	0	4294967295	Vel. unit	PnB5A
	2	Speed during search for zero	UDINT	RW	Yes	Yes	100000	0	4294967295	Vel. unit	PnB5C

Continued on next page.

Continued from previous page.

Index	Subin-dex	Name	Data Type	Acc-ess	PDO Map-ping	Saving to EEPRO-M	Default Value	Lower Limit	Upper Limit	Unit	Parame-ter No.
609Ah	0	Homing Acceleration	UDINT	RW	Yes	Yes	1000	0	4294967295	Acc. unit	PnB5E
60A4h	Profile Jerk										
	0	Number of entries	USINT	RO	No	No	1	–	–	–	–
	1	Profile jerk1	UDINT	RW	No	Yes	25	0	50	%	PnB9A
60B0h	0	Position Offset	DINT	RW	Yes	No	0	-2147483648	2147483647	Pos. Unit	–
60B1h	0	Velocity Offset	DINT	RW	Yes	No	0	-2147483648	2147483647	Vel. unit	PnB60
60B2h	0	Torque Offset	INT	RW	Yes	No	0	-32768	32767	Trq. unit	PnB62
60B8h	0	Touch probe function	UINT	RW	Yes	No	0	0	0xFFFF	–	PnB64
60B9h	0	Touch Probe Status	UINT	RO	Yes	No	–	–	–	–	PnB66
60BAh	0	Touch probe 1 positive edge	DINT	RO	Yes	No	–	–	–	Pos. unit	PnB68
60BBh	0	Touch probe 1 negative edge	DINT	RO	Yes	No	–	–	–	Pos. unit	PnB72
60BCh	0	Touch probe 2 positive edge	DINT	RO	Yes	No	–	–	–	Pos. unit	PnB6A
60BDh	0	Touch probe 2 negative edge	DINT	RO	Yes	No	–	–	–	Pos. unit	PnB74
60C0h	0	Interpolation Sub Mode Select	INT	RW	No	No	0	-3	0	–	PnB92
60C1h	Interpolation Data Record										
	0	Number of entries	USINT	RO	No	No	1	–	–	–	–
	1	Interpolation data record	DINT	RW	Yes	No	0	-2147483648	2147483647	Pos. unit	PnB70
60C2h	Interpolation Time Period										
	0	Number of entries	USINT	RO	No	No	2	–	–	–	–
	1	Interpolation time period value	USINT	RW	No	No	125	1	250	–	PnB6E
	2	Interpolation time index	SINT	RW	No	No	-6	-6	-3	–	PnB6F
60E0h	0	Positive Torque Limit Value	UINT	RW	Yes	Yes	8000	0	65535	Trq. unit	PnB80
60E1h	0	Negative Torque Limit Value	UINT	RW	Yes	Yes	8000	0	65535	Trq. unit	PnB82
60E4h	Additional Position Actual Value										
	0	Number of entries	USINT	RO	No	No	1	–	–	–	–
	1	External encoder position	DINT	RO	Yes	Yes	0	–	–	inc	–
60F2h	0	Position option code	UINT	RW	Yes	No	0	0	0xFFFF	–	PnBC2
60F4h	0	Following Error Actual Value	DINT	RO	Yes	No	–	–	–	Pos. unit	PnB84
60FCh	0	Position Demand Inter-nal Value	DINT	RO	Yes	No	–	–	–	Inc	PnB86
60FDh	0	Digital Inputs	UDINT	RO	Yes	No	–	–	–	–	PnB88

Continued on next page.

Continued from previous page.

Index	Subin-dex	Name	Data Type	Acc-ess	PDO Map-ping	Saving to EEPRO-M	Default Value	Lower Limit	Upper Limit	Unit	Parame-ter No.
60FEh	Digital Outputs										
	0	Number of entries	USINT	RO	No	No	2	–	–	–	–
	1	Physical outputs	UDINT	RW	Yes	Yes	0	0	0xFFFFFFFF	–	PnB8A
	2	Bit mask	UDINT	RW	No	Yes	0x000C0000	0	0xFFFFFFFF	–	PnB8C
60FFh	0	Target Velocity	DINT	RW	Yes	No	0	-2147483648	2147483647	Vel. unit	PnB8E
6403h	0	Motor Catalogue Number	STRIN-G	RO	No	No	–	–	–	–	–
6502h	0	Supported Drive Modes	UDINT	RO	No	No	0x03ED	–	–	–	PnB90
F9F0h	0	Manufacturer Serial Number	STRIN-G	RO	No	No	–	–	–	–	–

17.3 SDO Abort Code List

The following table gives the SDO abort codes for SDO communications errors.

Value	Description
0x05 03 00 00	Toggle bit did not change.
0x05 04 00 00	SDO protocol timeout
0x05 04 00 01	Client/server command specifier is not valid or is unknown.
0x05 04 00 05	Out of memory
0x06 01 00 00	Unsupported access to an object
0x06 01 00 01	Attempt to read to a write-only object
0x06 01 00 02	Attempt to write to a read-only object
0x06 01 00 03	The entry was not written because the subindex was a value other than 0
0x06 01 00 04	The object cannot be accessed through complete access
0x06 02 00 00	The object does not exist in the object directory.
0x06 04 00 41	The object cannot be mapped to the PDO.
0x06 04 00 42	The number and length of the objects to be mapped would exceed the PDO length.
0x06 04 00 43	General parameter incompatibility
0x06 04 00 47	General internal incompatibility in the device
0x06 06 00 00	Access failed due to a hardware error.
0x06 07 00 10	Data type does not match: length of service parameter does not match.
0x06 07 00 12	Data type does not match: service parameter too long.
0x06 07 00 13	Data type does not match: service parameter too short.
0x06 09 00 11	Subindex does not exist.
0x06 09 00 30	Value range of parameter was exceeded (only for write access).
0x06 09 00 31	Value of parameter that was written is too high.
0x06 09 00 32	Value of parameter that was written is too low.
0x06 09 00 36	The maximum value is less than the minimum value.
0x08 00 00 00	General error
0x08 00 00 20	Data cannot be transferred or stored to the application.
0x08 00 00 21	Data cannot be transferred or stored to the application because of local control.
0x08 00 00 22	Data cannot be transferred or stored to the application because of the present device state.
0x08 00 00 23	The object does not exist in the object directory.

17.4 Parameter Recording Table

Use the following table to record the settings of the parameters.

Parameter No.	Default Setting						Name	When Enabled
Pn000 (2000h)	0000h						Basic Function Selections 0	After restart
Pn001 (2001h)	0000h						Application Function Selections 1	After restart
Pn002 (2002h)	0011h						Application Function Selections 2	After restart
Pn006 (2006h)	0002h						Application Function Selections 6	Immediately
Pn007 (2007h)	0000h						Application Function Selections 7	Immediately
Pn008 (2008h)	4000h						Application Function Selections 8	After restart
Pn009 (2009h)	0040h						Application Function Selections 9	After restart
Pn00A (200Ah)	0001h						Application Function Selections A	After restart
Pn00B (200Bh)	0000h						Application Function Selections B	After restart
Pn00C (200Ch)	0040h						Application Function Selections C	After restart
Pn00D (200Dh)	0000h						Application Function Selections D	Immediately
Pn00E (200Eh)	0000h						Application Function Selections E	After restart
Pn00F (200Fh)	0000h						Application Function Selections F	After restart
Pn021 (2021h)	0000h						Reserved (Do not change.)	–
Pn022 (2022h)	0000h						Application Function Selections 22	After restart
Pn02F (202Fh)	0000h						Application Function Selections 2F	After restart
Pn040 (2040h)	0000h						Reserved (Do not change.)	–
Pn050 (2050h)	00000000h						SigmaLINK II Response Data Selection 1	After restart
Pn052 (2052h)	00000000h						SigmaLINK II Response Data Selection 2	After restart
Pn054 (2054h)	00000000h						SigmaLINK II Response Data Selection 3	After restart
Pn056 (2056h)	00000000h						SigmaLINK II Response Data Selection 4	After restart
Pn058 (2058h)	00000000h						SigmaLINK II Response Data Selection 5	After restart
Pn05A (205Ah)	00000000h						SigmaLINK II Response Data Selection 6	After restart
Pn05C (205Ch)	00000000h						SigmaLINK II Response Data Selection 7	After restart

Continued on next page.

Continued from previous page.

Parameter No.	Default Setting						Name	When Enabled
Pn05E (205Eh)	00000000h						SigmaLINK II Response Data Selection 8	After restart
Pn080 (2080h)	0000h						Application Function Selections 80	After restart
Pn081 (2081h)	0000h						Application Function Selections 81	After restart
Pn090 (2090h)	00000000h						SigmaLINK II Command Data Selection 1	After restart
Pn092 (2092h)	00000000h						SigmaLINK II Command Data Selection 2	After restart
Pn094 (2094h)	00000000h						SigmaLINK II Command Data Selection 3	After restart
Pn096 (2096h)	00000000h						SigmaLINK II Command Data Selection 4	After restart
Pn0B1 (20B1h)	0000h						SigmaLINK II Sequence Input Allocation 1	After restart
Pn0B2 (20B2h)	0000h						SigmaLINK II Sequence Input Allocation 2	After restart
Pn0B5 (20B5h)	0000h						SigmaLINK II Sequence Output Allocation 1	After restart
Pn0D6 (20D6h)	0000h						Reserved (Do not change.)	–
Pn0DA (20DAh)	0000h						SigmaLINK II Semi-closed Encoder Selection	After restart
Pn0DB (20DBh)	0101h						SigmaLINK II Fully-closed Encoder Selection	After restart
Pn0DC (20DCh)	0000h						SigmaLINK II Node Change Detection Condition Selection	After restart
Pn0DD (20DDh)	0130h						SigmaLINK II I/O Device Error Detection Selection	After restart
Pn100 (2100h)	400						Speed Loop Gain	Immediately
Pn101 (2101h)	2000						Speed Loop Integral Time Constant	Immediately
Pn102 (2102h)	400						Position Loop Gain	Immediately
Pn103 (2103h)	100						Moment of Inertia Ratio	Immediately
Pn104 (2104h)	400						Second Speed Loop Gain	Immediately
Pn105 (2105h)	2000						Second Speed Loop Integral Time Constant	Immediately
Pn106 (2106h)	400						Second Position Loop Gain	Immediately
Pn109 (2109h)	0						Feedforward	Immediately
Pn10A (210Ah)	0						Feedforward Filter Time Constant	Immediately
Pn10B (210Bh)	0000h						Gain Application Selections	–

Continued on next page.

Continued from previous page.

Parameter No.	Default Setting						Name	When Enabled
Pn10C (210Ch)	200						Mode Switching Level for Torque Reference	Immediately
Pn10D (210Dh)	0						Mode Switching Level for Speed Reference	Immediately
Pn10E (210Eh)	0						Mode Switching Level for Acceleration	Immediately
Pn10F (210Fh)	0						Mode Switching Level for Position Deviation	Immediately
Pn11F (211Fh)	0						Position Integral Time Constant	Immediately
Pn121 (2121h)	100						Friction Compensation Gain	Immediately
Pn122 (2122h)	100						Second Friction Compensation Gain	Immediately
Pn123 (2123h)	0						Friction Compensation Coefficient	Immediately
Pn124 (2124h)	0						Friction Compensation Frequency Correction	Immediately
Pn125 (2125h)	100						Friction Compensation Gain Correction	Immediately
Pn129 (2129h)	100						Third Friction Compensation Gain	Immediately
Pn12A (212Ah)	100						Fourth Friction Compensation Gain	Immediately
Pn12B (212Bh)	400						Third Speed Loop Gain	Immediately
Pn12C (212Ch)	2000						Third Speed Loop Integral Time Constant	Immediately
Pn12D (212Dh)	400						Third Position Loop Gain	Immediately
Pn12E (212Eh)	400						Fourth Speed Loop Gain	Immediately
Pn12F (212Fh)	2000						Fourth Speed Loop Integral Time Constant	Immediately
Pn130 (2130h)	400						Fourth Position Loop Gain	Immediately
Pn131 (2131h)	0						Gain Switching Time 1	Immediately
Pn132 (2132h)	0						Gain Switching Time 2	Immediately
Pn135 (2135h)	0						Gain Switching Waiting Time 1	Immediately
Pn136 (2136h)	0						Gain Switching Waiting Time 2	Immediately
Pn139 (2139h)	0000h						Automatic Gain Switching Selections 1	Immediately
Pn13D (213Dh)	2000						Current Gain Level	Immediately
Pn13F (213Fh)	0						Less-Deviation Control Second Pos. Integral Time Constant	Immediately

Continued on next page.

Continued from previous page.

Parameter No.	Default Setting						Name	When Enabled
Pn140 (2140h)	0100h						Model Following Control-Related Selections	Immediately
Pn141 (2141h)	500						Model Following Control Gain	Immediately
Pn142 (2142h)	1000						Model Following Control Gain Correction	Immediately
Pn143 (2143h)	1000						Model Following Control Bias in the Forward Direction	Immediately
Pn144 (2144h)	1000						Model Following Control Bias in the Reverse Direction	Immediately
Pn145 (2145h)	500						Vibration Suppression 1 Frequency A	Immediately
Pn146 (2146h)	700						Vibration Suppression 1 Frequency B	Immediately
Pn147 (2147h)	1000						Model Following Control Speed Feedforward Compensation	Immediately
Pn148 (2148h)	500						Second Model Following Control Gain	Immediately
Pn149 (2149h)	1000						Second Model Following Control Gain Correction	Immediately
Pn14A (214Ah)	800						Vibration Suppression 2 Frequency	Immediately
Pn14B (214Bh)	100						Vibration Suppression 2 Correction	Immediately
Pn14F (214Fh)	0030h						Control-Related Selections	After restart
Pn15B (215Bh)	500						Third Model Following Control Gain	Immediately
Pn15C (215Ch)	1000						Third Model Following Control Gain Correction	Immediately
Pn15D (215Dh)	500						Fourth Model Following Control Gain	Immediately
Pn15E (215Eh)	1000						Fourth Model Following Control Gain Correction	Immediately
Pn160 (2160h)	0010h						Anti-Resonance Control-Related Selections	Immediately
Pn161 (2161h)	1000						Anti-Resonance Frequency	Immediately
Pn162 (2162h)	100						Anti-Resonance Gain Correction	Immediately
Pn163 (2163h)	0						Anti-Resonance Damping Gain	Immediately
Pn164 (2164h)	0						Anti-Resonance Filter Time Constant 1 Correction	Immediately
Pn165 (2165h)	0						Anti-Resonance Filter Time Constant 2 Correction	Immediately
Pn166 (2166h)	0						Anti-Resonance Damping Gain 2	Immediately
Pn170 (2170h)	1401h						Tuning-less Function-Related Selections	–

Continued on next page.

Continued from previous page.

Parameter No.	Default Setting						Name	When Enabled
Pn173 (2173h)	0000h						Load Fluctuation Compensation Control-Related Selections	Immediately
Pn174 (2174h)	400						Load Fluctuation Compensation Control Response Level	Immediately
Pn181 (2181h)	0						Mode Switching Level for Speed Reference	Immediately
Pn182 (2182h)	0						Mode Switching Level for Acceleration	Immediately
Pn183 (2183h)	0010h						Low-Frequency Control Selections	–
Pn184 (2184h)	10.0						Low-Frequency Control Frequency	Immediately
Pn185 (2185h)	0.0						Low-Frequency Control Gain	Immediately
Pn186 (2186h)	0						Low-Frequency Control Filter Correction	Immediately
Pn190 (2190h)	0100h						Less-Deviation Control-Related Selections	–
Pn191 (2191h)	1000						Less-Deviation Control Speed Feedforward Gain	Immediately
Pn192 (2192h)	1000						Less-Deviation Control Forward Torque Feedforward Gain	Immediately
Pn193 (2193h)	1000						Less-Deviation Control Reverse Torque Feedforward Gain	Immediately
Pn195 (2195h)	50						Less-Deviation Control Feedforward Filter Time Constant	Immediately
Pn196 (2196h)	0						Less-Dev. Ctrl. Trq. FF Average Movement Time	Immediately
Pn197 (2197h)	10000						Less-Deviation Control Incomplete Integration Rate	Immediately
Pn198 (2198h)	0						Less-Dev. Ctrl. Rot. Servomotor Viscous Fric. Comp. Coeff.	Immediately
Pn199 (2199h)	0						Less-Dev. Ctrl. Lin. Servomotor Viscous Fric. Comp. Coeff.	Immediately
Pn19A (219Ah)	0						Model Follow. Ctrl. Less-Dev. Ctrl. Trq. FF Comp. App. Rate	Immediately
Pn205 (2205h)	65535						Multiturn Limit	After restart
Pn207 (2207h)	0010h						Position Control Function Selections	After restart
Pn20A (220Ah)	32768						Number of External Encoder Scale Pitches	After restart
Pn20E (220Eh)	64						Electronic Gear Ratio (Numerator)	After restart
Pn210 (2210h)	1						Electronic Gear Ratio (Denominator)	After restart
Pn212 (2212h)	2048						Number of Encoder Output Pulses	After restart
Pn21D (221Dh)	0080h						Encoder Resolution Setting	After restart

Continued on next page.

Continued from previous page.

Parameter No.	Default Setting						Name	When Enabled
Pn22A (222Ah)	0000h						Fully-closed Control Selections	After restart
Pn230 (2230h)	0000h						Position Control Expansion Function Selections	After restart
Pn231 (2231h)	0						Backlash Compensation Value	Immediately
Pn233 (2233h)	0						Backlash Compensation Time Constant	Immediately
Pn281 (2281h)	20						Encoder Output Resolution	After restart
Pn282 (2282h)	0						Linear Encoder Scale Pitch	After restart
Pn304 (2304h)	500						Jogging Speed	Immediately
Pn305 (2305h)	0						Soft Start Acceleration Time	Immediately
Pn306 (2306h)	0						Soft Start Deceleration Time	Immediately
Pn307 (2307h)	0						Speed Reference Filter Time Constant	Immediately
Pn308 (2308h)	0						Speed Feedback Filter Time Constant	Immediately
Pn30A (230Ah)	0						Deceleration Time for Servo OFF and Forced Stops	Immediately
Pn30C (230Ch)	0						Speed Feedforward Average Movement Time	Immediately
Pn310 (2310h)	0000h						Vibration Detection Selections	Immediately
Pn311 (2311h)	100						Vibration Detection Sensitivity	Immediately
Pn312 (2312h)	50						Vibration Detection Level	Immediately
Pn316 (2316h)	10000						Maximum Motor Speed	After restart
Pn324 (2324h)	300						Moment of Inertia Calculation Starting Level	Immediately
Pn383 (2383h)	50						Jogging Speed	Immediately
Pn384 (2384h)	10						Vibration Detection Level	Immediately
Pn385 (2385h)	50						Maximum Motor Speed	After restart
Pn401 (2401h)	100						First Stage First Torque Reference Filter Time Constant	Immediately
Pn402 (2402h)	800						Forward Torque Limit	Immediately
Pn403 (2403h)	800						Reverse Torque Limit	Immediately
Pn404 (2404h)	100						Forward External Torque Limit	Immediately

Continued on next page.

Continued from previous page.

Parameter No.	Default Setting						Name	When Enabled
Pn405 (2405h)	100						Reverse External Torque Limit	Immediately
Pn406 (2406h)	800						Emergency Stop Torque	Immediately
Pn407 (2407h)	10000						Speed Limit during Torque Control	Immediately
Pn408 (2408h)	0000h						Torque-Related Function Selections	–
Pn409 (2409h)	5000						First Stage Notch Filter Frequency	Immediately
Pn40A (240Ah)	70						First Stage Notch Filter Q Value	Immediately
Pn40B (240Bh)	0						First Stage Notch Filter Depth	Immediately
Pn40C (240Ch)	5000						Second Stage Notch Filter Frequency	Immediately
Pn40D (240Dh)	70						Second Stage Notch Filter Q Value	Immediately
Pn40E (240Eh)	0						Second Stage Notch Filter Depth	Immediately
Pn40F (240Fh)	5000						Second Stage Second Torque Reference Filter Frequency	Immediately
Pn410 (2410h)	50						Second Stage Second Torque Reference Filter Q Value	Immediately
Pn412 (2412h)	100						First Stage Second Torque Reference Filter Time Constant	Immediately
Pn413 (2413h)	100						First Stage Third Torque Reference Filter Time Constant	Immediately
Pn414 (2414h)	100						First Stage Fourth Torque Reference Filter Time Constant	Immediately
Pn416 (2416h)	0000h						Torque-Related Function Selections 2	Immediately
Pn417 (2417h)	5000						Third Stage Notch Filter Frequency	Immediately
Pn418 (2418h)	70						Third Stage Notch Filter Q Value	Immediately
Pn419 (2419h)	0						Third Stage Notch Filter Depth	Immediately
Pn41A (241Ah)	5000						Fourth Stage Notch Filter Frequency	Immediately
Pn41B (241Bh)	70						Fourth Stage Notch Filter Q Value	Immediately
Pn41C (241Ch)	0						Fourth Stage Notch Filter Depth	Immediately
Pn41D (241Dh)	5000						Fifth Stage Notch Filter Frequency	Immediately
Pn41E (241Eh)	70						Fifth Stage Notch Filter Q Value	Immediately
Pn41F (241Fh)	0						Fifth Stage Notch Filter Depth	Immediately

Continued on next page.

Continued from previous page.

Parameter No.	Default Setting						Name	When Enabled
Pn423 (2423h)	0002h						Speed Ripple Compensation Selections	–
Pn424 (2424h)	50						Torque Limit at Main Circuit Voltage Drop	Immediately
Pn425 (2425h)	100						Release Time for Torque Limit at Main Circuit Voltage Drop	Immediately
Pn426 (2426h)	0						Torque Feedforward Average Movement Time	Immediately
Pn427 (2427h)	0						Speed Ripple Compensation Enable Speed	Immediately
Pn428 (2428h)	0001h						Output Torque Compensation Selections	After restart
Pn456 (2456h)	15						Sweep Torque Reference Amplitude	Immediately
Pn460 (2460h)	0101h						Notch Filter Adjustment Selections 1	Immediately
Pn475 (2475h)	0000h						Gravity Compensation-Related Selections	After restart
Pn476 (2476h)	0						Gravity Compensation Torque	Immediately
Pn480 (2480h)	10000						Speed Limit during Force Control	Immediately
Pn481 (2481h)	400						Polarity Detection Speed Loop Gain	Immediately
Pn482 (2482h)	3000						Polarity Detection Speed Loop Integral Time	Immediately
Pn483 (2483h)	30						Forward Force Limit	Immediately
Pn484 (2484h)	30						Reverse Force Limit	Immediately
Pn485 (2485h)	20						Polarity Detection Reference Speed	Immediately
Pn486 (2486h)	25						Polarity Detection Reference Acceleration/Deceleration Time	Immediately
Pn487 (2487h)	0						Polarity Detection Constant Speed Time	Immediately
Pn488 (2488h)	100						Polarity Detection Reference Waiting Time	Immediately
Pn48E (248Eh)	10						Polarity Detection Range	Immediately
Pn490 (2490h)	100						Polarity Detection Load Level	Immediately
Pn495 (2495h)	100						Polarity Detection Confirmation Force Reference	Immediately
Pn498 (2498h)	10						Polarity Detection Allowable Error Range	Immediately
Pn49F (249Fh)	0						Speed Ripple Compensation Enable Speed (Linear)	Immediately
Pn501 (2501h)	10						Zero Clamping Level	Immediately

Continued on next page.

Continued from previous page.

Parameter No.	Default Setting						Name	When Enabled
Pn502 (2502h)	20						Rotation Detection Level	Immediately
Pn503 (2503h)	10						Speed Coincidence Detection Signal Output Width	Immediately
Pn506 (2506h)	0						Brake Reference-Servo OFF Delay Time	Immediately
Pn507 (2507h)	100						Brake Reference Output Speed Level	Immediately
Pn508 (2508h)	50						Servo OFF-Brake Command Waiting Time	Immediately
Pn509 (2509h)	20						Momentary Power Interruption Hold Time	Immediately
Pn50A (250Ah)	1881h						Input Signal Selections 1	After restart
Pn50B (250Bh)	8882h						Input Signal Selections 2	After restart
Pn50E (250Eh)	0000h						Output Signal Selections 1	After restart
Pn50F (250Fh)	0100h						Output Signal Selections 2	After restart
Pn510 (2510h)	0000h						Output Signal Selections 3	After restart
Pn511 (2511h)	6543h						Input Signal Selections 5	After restart
Pn512 (2512h)	0000h						Output Signal Inverse Settings	After restart
Pn514 (2514h)	0000h						Output Signal Selections 4	After restart
Pn516 (2516h)	8888h						Input Signal Selections 7	After restart
Pn518 (2518h)	–						Reserved (Do not change.)	–
Pn51B (251Bh)	1000						Motor-Load Position Deviation Overflow Detection Level	Immediately
Pn51E (251Eh)	100						Position Deviation Overflow Warning Level	Immediately
Pn520 (2520h)	6116694						Position Deviation Overflow Alarm Level	Immediately
Pn522 (2522h)	7						In-position Range	Immediately
Pn524 (2524h)	10737418-24						Near Signal Width	Immediately
Pn526 (2526h)	6116694						Position Deviation Overflow Alarm Level at Servo ON	Immediately
Pn528 (2528h)	100						Position Deviation Overflow Warning Level at Servo ON	Immediately
Pn529 (2529h)	10000						Speed Limit Level at Servo ON	Immediately
Pn52A (252Ah)	20						Multiplier per Fully-closed Rotation	Immediately

Continued on next page.

Continued from previous page.

Parameter No.	Default Setting						Name	When Enabled
Pn52B (252Bh)	20						Overload Warning Level	Immediately
Pn52C (252Ch)	100						Base Current Derating at Motor Overload Detection	After restart
Pn530 (2530h)	0000h						Program Jogging-Related Selections	Immediately
Pn531 (2531h)	32768						Program Jogging Travel Distance	Immediately
Pn533 (2533h)	500						Program Jogging Movement Speed	Immediately
Pn534 (2534h)	100						Program Jogging Acceleration/Decel-eration Time	Immediately
Pn535 (2535h)	100						Program Jogging Waiting Time	Immediately
Pn536 (2536h)	1						Program Jogging Number of Movements	Immediately
Pn540 (2540h)	3000						Maximum Search Gain	Immediately
Pn550 (2550h)	0						Analog Monitor 1 Offset Voltage	Immediately
Pn551 (2551h)	0						Analog Monitor 2 Offset Voltage	Immediately
Pn552 (2552h)	100						Analog Monitor 1 Magnification	Immediately
Pn553 (2553h)	100						Analog Monitor 2 Magnification	Immediately
Pn55A (255Ah)	1						Power Consumption Monitor Unit Time	Immediately
Pn55C (255Ch)	0001h						Specifying Output Status At a Host Comms Error Switch	After restart
Pn55D (255Dh)	0000h						Specifying Output Status When a Host Comms Error Occurs	After restart
Pn560 (2560h)	400						Residual Vibration Detection Width	Immediately
Pn561 (2561h)	100						Overshoot Detection Level	Immediately
Pn562 (2562h)	80						Setting Gain Ratio	Immediately
Pn580 (2580h)	10						Zero Clamping Level	Immediately
Pn581 (2581h)	20						Zero Speed Level	Immediately
Pn582 (2582h)	10						Speed Coincidence Detection Signal Output Width	Immediately
Pn583 (2583h)	10						Brake Reference Output Speed Level	Immediately
Pn584 (2584h)	10000						Speed Limit Level at Servo ON	Immediately
Pn585 (2585h)	50						Program Jogging Movement Speed	Immediately

Continued on next page.

Continued from previous page.

Parameter No.	Default Setting						Name	When Enabled
Pn586 (2586h)	0						Motor Running Cooling Ratio	Immediately
Pn587 (2587h)	0000h						Polarity Detection Selection for Absolute Linear Encoder	Immediately
Pn589 (2589h)	1500						SigmaLINK II Node Detection Time	After restart
Pn590 (2590h)	1007h						P-OT (Forward Drive Prohibit Input) Signal Allocation	After restart
Pn591 (2591h)	1008h						N-OT (Reverse Drive Prohibit Input) Signal Allocation	After restart
Pn593 (2593h)	1010h						/Probe1 (Probe 1 Latch Input) Signal Allocation	After restart
Pn594 (2594h)	1011h						/Probe2 (Probe 2 Latch Input) Signal Allocation	After restart
Pn595 (2595h)	1012h						/Home (Home Switch Input) Signal Allocation	After restart
Pn597 (2597h)	0000h						FSTP (Forced Stop Input) Signal Allocation	After restart
Pn598 (2598h)	0000h						/P-CL (Forward External Torque Limit Input) Signal Allocation	After restart
Pn599 (2599h)	0000h						/N-CL (Reverse External Torque Limit Input) Signal Allocation	After restart
Pn5B0 (25B0h)	0000h						/COIN (Positioning Completion Output) Signal Allocation	After restart
Pn5B1 (25B1h)	0000h						/V-CMP (Speed Coincidence Detection Output) Signal Allocation	After restart
Pn5B2 (25B2h)	0000h						/TGON (Rotation Detection Output) Signal Allocation	After restart
Pn5B3 (25B3h)	0000h						/S-RDY (Servo Ready Output) Signal Allocation	After restart
Pn5B4 (25B4h)	0000h						/CLT (Torque Limit Detection Output) Signal Allocation	After restart
Pn5B5 (25B5h)	0000h						/VLT (Speed Limit Detection Output) Signal Allocation	After restart
Pn5B6 (25B6h)	1001h						/BK (Brake Output) Signal Allocation	After restart
Pn5B7 (25B7h)	0000h						/WARN (Warning Output) Signal Allocation	After restart
Pn5B8 (25B8h)	0000h						/NEAR (Near Output) Signal Allocation	After restart
Pn5BC (25BCh)	0000h						/PM (Preventative Maintenance Output) Signal Allocation	After restart
Pn5C3 (25C3h)	0000h						Error Detection Setting	After restart
Pn5C4 (25C4h)	2000						Error Detection Sample Data Set 1 Warning Level 1	Immediately
Pn5C5 (25C5h)	1520						Error Detection Sample Data Set 1 Judgment Level 1	Immediately
Pn5C6 (25C6h)	2000						Error Detection Sample Data Set 1 Warning Level 2	Immediately

Continued on next page.

Continued from previous page.

Parameter No.	Default Setting						Name	When Enabled
Pn5C7 (25C7h)	1520						Error Detection Sample Data Set 1 Judgment Level 2	Immediately
Pn5C8 (25C8h)	2000						Error Detection Sample Data Set 2 Warning Level 1	Immediately
Pn5C9 (25C9h)	1520						Error Detection Sample Data Set 2 Judgment Level 1	Immediately
Pn5CA (25CAh)	2000						Error Detection Sample Data Set 2 Warning Level 2	Immediately
Pn5CB (25CBh)	1520						Error Detection Sample Data Set 2 Judgment Level 2	Immediately
Pn5D7 (25D7h)	0000h						Output Signal Inversion for Triggers at Preset Positions	After restart
Pn600 (2600h)	0						Regenerative Resistor Capacity	Immediately
Pn601 (2601h)	0						Dynamic Brake Resistor Allowable Energy Consumption	After restart
Pn603 (2603h)	0						Regenerative Resistance	Immediately
Pn604 (2604h)	0						Dynamic Brake Resistance	After restart
Pn61A (261Ah)	0000h						Overheat Protection Selections	After restart
Pn61B (261Bh)	250						Overheat Alarm Level	Immediately
Pn61C (261Ch)	100						Overheat Warning Level	Immediately
Pn61D (261Dh)	0						Overheat Alarm Filter Time	Immediately
Pn621 (2621h)	–						Reserved (Do not change.)	–
Pn622 (2622h)	–						Reserved (Do not change.)	–
Pn623 (2623h)	–						Reserved (Do not change.)	–
Pn624 (2624h)	–						Reserved (Do not change.)	–
Pn625 (2625h)	–						Reserved (Do not change.)	–
Pn626 (2626h)	–						Reserved (Do not change.)	–
Pn628 (2628h)	–						Reserved (Do not change.)	–
Pn629 (2629h)	0001h						Slot Selections for Safety Module Monitors	–
Pn660 (2660h)	0000h						Triggers at Preset Positions Switch	After restart

18

Appendices

Provides information on interpreting LED indicators and panel displays and tables of corresponding SERVOPACK and SigmaWin+ function names.

18.1 Interpreting LED Displays 858

18.1.1 RUN 858

18.1.2 ERR 858

18.1.3 L/A A, L/A B 859

18.2 Interpreting Panel Displays 860

18.2.1 Interpreting Status Displays 860

18.2.2 Alarm and Warning Displays 860

18.2.3 Hard Wire Base Block Active Display 860

18.2.4 Overtravel Display 860

18.2.5 Forced Stop Display 861

18.3 Corresponding SERVOPACK and SigmaWin+ Function Names 862

18.3.1 Corresponding SERVOPACK Utility Function Names 862

18.3.2 Corresponding SERVOPACK Monitor Display Function Names 863

18.1 Interpreting LED Displays

This diagram shows details of the EtherCAT communications LED indicators. The illumination patterns conform to the indicator specifications published by ETG.

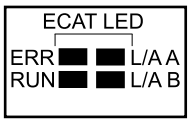

18.1.1 RUN

The RUN indicator shows the status of EtherCAT communications.

LED Indicator		Description
Status	Pattern	
Off	Constantly off.	EtherCAT communications are in INIT state.
Blinking	On / Off 200 ms 200 ms	EtherCAT communications are in PRE-OPERATIONAL state.
Single flash	On / Off 1000 ms 200 ms	EtherCAT communications are in SAFE-OPERATIONAL state.
On	Constantly on.	EtherCAT communications are in OPERATIONAL state.
Flickering	50 ms On / Off	EtherCAT communications have been started but are not yet in INIT state.

18.1.2 ERR

The ERR indicator shows the error status of EtherCAT communications.

LED Indicator		Description
Status	Pattern	
Off	Constantly off.	The EtherCAT communications are in working condition.
Flickering	50 ms On / Off	Booting error was detected.
Blinking	On / Off 200 ms 200 ms	State change commanded by master is impossible due to register or object settings.
Single flash	On / Off 1000 ms 200 ms	Synchronization error, the EtherCAT network module enters SAFE-OPERATIONAL state automatically.

Continued on next page.

Continued from previous page.

LED Indicator		Description
Status	Pattern	
Double flash	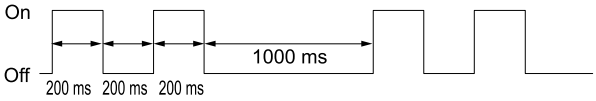	An application (Sync Manager) watchdog timeout has occurred.
On	Constantly on.	A PDI watchdog timeout has occurred.

18.1.3 L/A A, L/A B

The L/A A and L/A B indicators show whether communications cables are connected to the CN6A and CN6B connectors and whether communications are active. The L/A A indicator shows the status of the CN6A connector, and the L/A B indicator shows the status of the CN6B connector.

LED Indicator		Description
Status	Pattern	
Off	Constantly off.	A communications cable is not physically connected. An EtherCAT controller is not started up.
Flickering	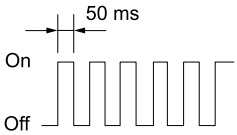	Data are being exchanged.
On	Constantly on.	A communications cable is physically connected, but no data being exchanged.

18.2 Interpreting Panel Displays

You can check the Servo Drive status on the panel display of the SERVOPACK.

Also, if an alarm or warning occurs, the alarm or warning number will be displayed.

> **Important**
>
> If the displayed characters cannot be recognized, turn the SERVOPACK power OFF and ON again.
>
> If this does not resolve the problem, check the items shown below.
>
> • Check the input signals on the [Status] monitor of the SigmaWin+.
> Refer to the following section for details.
> ☞ *(1) Operating Procedure on page 498*
>
> • Check if anything around the SERVOPACK is generating noise.
>
> If the problem is still not resolved after checking the above items, the SERVOPACK may be faulty.

18.2.1 Interpreting Status Displays

The status is displayed as described below.

Display	Description	Display	Description
	/TGON (Rotation Detection Output) Signal Display Lit if the servomotor speed is higher than the setting of Pn502 or Pn581 and not lit if the speed is lower than the setting. (The default setting is 20 min^{-1} or 20 mm/s.)		**Reference Input Display** Lit while a reference is being input.
	Base Block Display Lit during the base block state (servo OFF). Not lit while the servo is ON.		**Control Power Supply ON Display** Lit while the control power is being supplied.

18.2.2 Alarm and Warning Displays

If there is an alarm or warning, the display will change in the following order.

Example: Alarm A.020

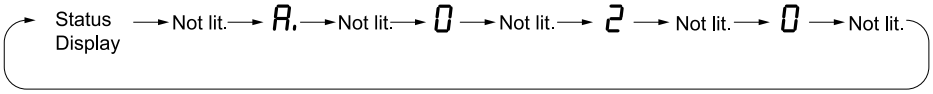

18.2.3 Hard Wire Base Block Active Display

If a hard wire base block (HWBB) is active, the display will change in the following order.

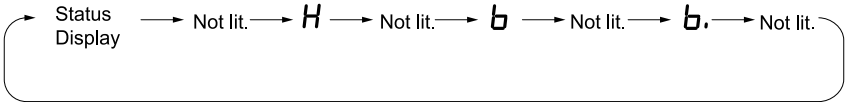

18.2.4 Overtravel Display

If overtravel has occurred, the display will change in the following order.

① Forward Overtravel (P-OT)

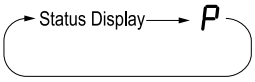

② Reverse Overtravel (N-OT)

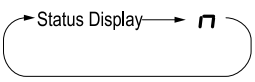

③ Forward and Reverse Overtravel

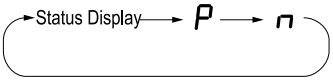

18.2.5 Forced Stop Display

During a forced stop, the following display will appear.

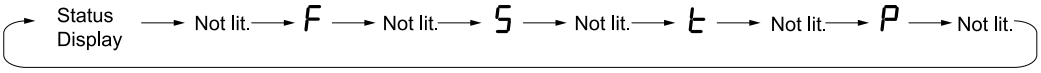

18.3 Corresponding SERVOPACK and SigmaWin+ Function Names

This section gives the names and numbers of the utility functions and monitor display functions used by the SERVOPACKs and the names used by the SigmaWin+.

18.3.1 Corresponding SERVOPACK Utility Function Names

SigmaWin+		SERVOPACK	
Button in [Menu] Window	Function Name	Fn No.	Function Name
Basic Functions	Initialize	Fn005	Initialize Parameters
	Software Reset	Fn030	Software Reset
	Setup Wizard	–	–
	I/O Signal Allocation	–	–
	Product Information	Fn011	Display Servomotor Model
		Fn012	Display Software Version
		Fn01E	Display SERVOPACK and Servomotor IDs
		Fn01F	Display Servomotor ID from Feedback Option Module
Encoder Setting	Reset Absolute Encoder	Fn008	Reset Absolute Encoder
	Multi-turn Limit Setup	Fn013	Multiturn Limit Setting after A.CC0 (Multiturn Limit Disagreement) Alarm
	Search Origin	Fn003	Origin Search
	Zero Point Position Setting	Fn020	Set Absolute Linear Encoder Origin
	Polarity Detection	Fn080	Polarity Detection
	Motor Parameter Scale Write	–	–
Troubleshooting	Display Alarm	Fn000	Display Alarm History
		Fn006	Clear Alarm History
		Fn014	Reset Option Module Configuration Error
	Alarm Trace	–	–
	Reset Motor Type Alarm	Fn021	Reset Motor Type Alarm
Operation	Jog	Fn002	Jog
	Program JOG Operation	Fn004	Jog Program
Monitor	Trace	–	–
	Real Time Trace	–	–
	Monitor	–	–
	Life Monitor	–	–

Continued on next page.

Continued from previous page.

SigmaWin+		SERVOPACK	
Button in [Menu] Window	Function Name	Fn No.	Function Name
Tuning	Tuning - Autotuning without Host Reference	Fn201	Advanced Autotuning without Reference
	Tuning - Autotuning with Host Reference	Fn202	Advanced Autotuning with Reference
	Tuning - Custom Tuning	Fn203	One-Parameter Tuning
	Tuning - Custom Tuning - Adjust Anti-resonance Control	Fn204	Adjust Anti-resonance Control
	Tuning - Custom Tuning - Vibration Suppression	Fn205	Vibration Suppression
	System Tuning	–	–
	Response Level Setting	Fn200	Tuning-less Level Setting
	Edit Online Parameters	–	–
Diagnostic	Mechanical Analysis	–	–
	Easy FFT	Fn206	Easy FFT
	Ripple Compensation	–	–
	Online Vibration Monitor	–	–
Others	Adjust the Analog Monitor Output	Fn00C	Adjust Analog Monitor Output Offset
		Fn00D	Adjust Analog Monitor Output Gain
	Adjust the Motor Current Detection Signal Offsets	Fn00E	Autotune Motor Current Detection Signal Offset
		Fn00F	Manually Adjust Motor Current Detection Signal Offset
	Initialize Vibration Detection Level	Fn01B	Initialize Vibration Detection Level
	Parameter Converter	–	–
	SERVOPACK Axis Name Setting	–	–
	Write Prohibited Setting	Fn010	Write Prohibition Setting
	Motor Parameter SERVOPACK Write	–	–

18.3.2 Corresponding SERVOPACK Monitor Display Function Names

SigmaWin+ Button in [Menu] Window: [Monitor] - [Operation]	SERVOPACK	
Name [Unit]	Un No.	Name [Unit]
Motor Speed [min^{-1}]	Un000	Motor Speed [min^{-1}]
Speed Reference [min^{-1}]	Un001	Speed Reference [min^{-1}]
Torque Reference [%]	Un002	Torque Reference [%] (percentage of rated torque)
• Rotary servomotors: Rotational Angle 1 [encoder pulses] (number of encoder pulses from encoder phase C) • Linear servomotors: Electrical Angle 1 [linear encoder pulses] (linear encoder pulses from the polarity origin)	Un003	• Rotary servomotors: Rotational Angle 1 [encoder pulses] (number of encoder pulses from encoder phase C displayed in decimal) • Linear servomotors: Electrical Angle 1 [linear encoder pulses] (linear encoder pulses from the polarity origin displayed in decimal)

Continued on next page.

Continued from previous page.

SigmaWin+ Button in [Menu] Window: [Monitor] - [Operation]	SERVOPACK	
Name [Unit]	**Un No.**	**Name [Unit]**
• Rotary servomotors: Rotational Angle 2 [deg] (electrical angle from polarity origin) • Linear servomotors: Electrical Angle 2 [deg] (electrical angle from polarity origin)	Un004	• Rotary servomotors: Rotational Angle 2 [deg] (electrical angle from polarity origin) • Linear servomotors: Electrical Angle 2 [deg] (electrical angle from polarity origin)
Input Reference Pulse Speed [min^{-1}]	Un007	Input Reference Pulse Speed [min^{-1}] (displayed only during position control)
Position Deviation [reference units]	Un008	Position Deviation [reference units] (displayed only during position control)
Accumulated Load Ratio [%]	Un009	Accumulated Load Ratio [%] (percentage of rated torque: effective torque in cycles of 10 seconds)
Regenerative Load Ratio [%]	Un00A	Regenerative Load Ratio [%] (percentage of processable regenerative power: regenerative power consumption in cycles of 10 seconds)
Dynamic Brake Resistor Power Consumption [%]	Un00B	Dynamic Brake Resistor Power Consumption [%] (percentage of processable power at DB activation: displayed in cycles of 10 seconds)
Input Reference Pulse Counter [reference units]	Un00C	Input Reference Pulse Counter [reference units]
Feedback Pulse Counter [encoder pulses]	Un00D	Feedback Pulse Counter [encoder pulses]
Fully-closed Loop Feedback Pulse Counter [external encoder resolution]	Un00E	Fully-closed Loop Feedback Pulse Counter [external encoder resolution]
Upper Limit Setting of Motor Maximum Speed/Upper Limit Setting of Encoder Output Resolution	Un010 *1	Upper Limit Setting of Motor Maximum Speed/Upper Limit Setting of Encoder Output Resolution
Total Operation Time [100 ms]	Un012	Total Operation Time [100 ms]
Feedback Pulse Counter [reference units]	Un013	Feedback Pulse Counter [reference units]
Overheat Protection Input [0.01 V]	Un02F	Overheat Protection Input [0.01 V]
Current Backlash Compensation Value [0.1 reference units]	Un030	Current Backlash Compensation Value [0.1 reference units]
Backlash Compensation Value Setting Limit [0.1 reference units]	Un031	Backlash Compensation Value Setting Limit [0.1 reference units]
Power Consumption [W]	Un032	Power Consumption [W]
Consumed Power [0.001 Wh]	Un033	Consumed Power [0.001 Wh]
Cumulative Power Consumption [Wh]	Un034	Cumulative Power Consumption [Wh]
Absolute Encoder Multiturn Data	Un040	Absolute Encoder Multiturn Data
Position within One Rotation of Absolute Encoder [encoder pulses]	Un041	Position within One Rotation of Absolute Encoder [encoder pulses]
Lower Bits of Absolute Encoder Position [encoder pulses]	Un042	Lower Bits of Absolute Encoder Position [encoder pulses]
Upper Bits of Absolute Encoder Position [encoder pulses]	Un043	Upper Bits of Absolute Encoder Position [encoder pulses]
Lower Bits of External Absolute Encoder Position [encoder pulses]	Un054	Lower Bits of External Absolute Encoder Position [encoder pulses]
Upper Bits of External Absolute Encoder Position [encoder pulses]	Un055	Upper Bits of External Absolute Encoder Position [encoder pulses]
Maximum Value of Amplitude of Estimated Vibration [min^{-1}]	Un078	Maximum Value of Amplitude of Estimated Vibration [min^{-1}]
Estimated External Disturbance Torque [%]	Un079	Estimated External Disturbance Torque [%]

Continued on next page.

Continued from previous page.

SigmaWin+ Button in [Menu] Window: [Monitor] - [Operation]	SERVOPACK	
Name [Unit]	**Un No.**	**Name [Unit]**
Maximum Value of Estimated External Disturbance Torque [%]	Un07A	Maximum Value of Estimated External Disturbance Torque [%]
Minimum Value of Estimated External Disturbance Torque [%]	Un07B	Minimum Value of Estimated External Disturbance Torque [%]
Identified Moment of Inertia Ratio [%]	Un07C	Identified Moment of Inertia Ratio [%]
Maximum Identified Moment of Inertia Ratio [%]	Un088	Maximum Identified Moment of Inertia Ratio [%]
Minimum Identified Moment of Inertia Ratio [%]	Un089	Minimum Identified Moment of Inertia Ratio [%]
Number of Serial Encoder Communications Errors [times]	Un104	Number of Serial Encoder Communications Errors [times]
Settling Time [0.1 ms]	Un105	Settling Time [0.1 ms]
Amount of Overshoot [reference units]	Un106	Amount of Overshoot [reference units]
Residual Vibration Frequency [0.1 Hz]	Un107	Residual Vibration Frequency [0.1 Hz]
Maximum Settling Time [0.1 ms]	Un108	Maximum Settling Time [0.1 ms]
Maximum Amount of Overshoot [reference units]	Un109	Maximum Amount of Overshoot [reference units]
Estimated Vibration [min^{-1}]	Un10C	Estimated Vibration [min^{-1}]
Margin until Regenerative Overload [0.01%]	Un13C	Margin until Regenerative Overload [0.01%]
Margin until Undervoltage [V]	Un13E	Margin until Undervoltage [V]
Margin until Overvoltage [V]	Un13F	Margin until Overvoltage [V]
Maximum Value of Accumulated Load Ratio [%]	Un145	Maximum Value of Accumulated Load Ratio [%]
Margin until Overload [0.01 %]	Un14E	Margin until Overload [0.01 %]
Temperature Margin until SERVOPACK Overheats [°C]	Un173	Temperature Margin until SERVOPACK Overheats [°C]
Temperature Margin until Servomotor Overheats [°C]	Un174	Temperature Margin until Servomotor Overheats [°C]
Encoder Power Supplied Time [100 ms]	Un177	Encoder Power Supplied Time [100 ms]
Encoder Power Supply Voltage [0.1 V]	Un17A	Encoder Power Supply Voltage [0.1 V]
Encoder Battery Voltage [0.1 V]	Un17B	Encoder Battery Voltage [0.1 V]
Motor Total Number of Rotations [100 rev]	Un181	Motor Total Number of Rotations [100 rev]
Maintenance Prediction Monitor - Bearings	Un183	Maintenance Prediction Monitor - Bearings
Maintenance Prediction Monitor - Oil Seal	Un184	Maintenance Prediction Monitor - Oil Seal
Motor Vibration in X-Axis Direction [0.0001 G]	Un190	Motor Vibration in X-Axis Direction [0.0001 G]
Motor Vibration in Y-Axis Direction [0.0001 G]	Un191	Motor Vibration in Y-Axis Direction [0.0001 G]
Motor Vibration in Z-Axis Direction [0.0001 G]	Un192	Motor Vibration in Z-Axis Direction [0.0001 G]
Motor Vibration XYZ Composite Value [0.0001 G]	Un193	Motor Vibration XYZ Composite Value [0.0001 G]
Maximum Motor Vibration [0.0001 G]	Un194	Maximum Motor Vibration [0.0001 G]
SigmaLINK II Response Data 1	Un1A0	Σ-LINK II Response Data 1
SigmaLINK II Response Data 2	Un1A1	Σ-LINK II Response Data 2
SigmaLINK II Response Data 3	Un1A2	Σ-LINK II Response Data 3
SigmaLINK II Response Data 4	Un1A3	Σ-LINK II Response Data 4
SigmaLINK II Response Data 5	Un1A4	Σ-LINK II Response Data 5
SigmaLINK II Response Data 6	Un1A5	Σ-LINK II Response Data 6
SigmaLINK II Response Data 7	Un1A6	Σ-LINK II Response Data 7

Continued on next page.

Continued from previous page.

SigmaWin+ Button in [Menu] Window: [Monitor] - [Operation]	SERVOPACK	
Name [Unit]	**Un No.**	**Name [Unit]**
SigmaLINK II Response Data 8	Un1A7	Σ-LINK II Response Data 8
SigmaLINK II Command Data 1	Un1C0	Σ-LINK II Command Data 1
SigmaLINK II Command Data 2	Un1C1	Σ-LINK II Command Data 2
SigmaLINK II Command Data 3	Un1C2	Σ-LINK II Command Data 3
SigmaLINK II Command Data 4	Un1C3	Σ-LINK II Command Data 4
SigmaLINK II Data Status	Un1CC	Σ-LINK II Data Status
SigmaLINK II Data Status	Un1CD	Σ-LINK II Data Status
SigmaLINK II Data Status	Un1CE	Σ-LINK II Data Status
SigmaLINK II Data Status	Un1CF	Σ-LINK II Data Status

*1 You can use Un010 to monitor the upper limit setting for the maximum motor speed or the upper limit setting for the encoder output resolution.
You can monitor the upper limit of Pn281 (Encoder Output Resolution) for the current Pn385 (Maximum Motor Speed), or you can monitor the upper limit of the maximum motor speed setting for the current encoder output resolution setting.
Select which signal to monitor with Pn080 = n.X□□□ (Calculation Method for Maximum Speed or Encoder Output Pulses).

- If Pn080 = n.0□□□, Pn281 (Encoder Output Resolution) that can be set is displayed.
- If Pn080 = n.1□□□, Pn385 (Maximum Motor Speed) that can be set is displayed in mm/s.

SigmaWin+ Button in [Menu] Window: [Monitor] - [Status]	SERVOPACK	
Name [Unit]	**Un No.**	**Name [Unit]**
Active Gain Monitor	Un014	Active Gain Monitor (gain settings 1 = 1, gain settings 2 = 2, gain settings 3 = 3, gain settings 4 = 4)
Safety I/O Signal Monitor	Un015	Safety I/O Signal Monitor

SigmaWin+ Button in [Menu] Window: [Monitor] - [I/O]	SERVOPACK	
Name [Unit]	**Un No.**	**Name [Unit]**
Input Signal Monitor	Un005	Input Signal Monitor
Output Signal Monitor	Un006	Output Signal Monitor
SigmaLINK II Sequence Input Signal Monitor	Un1C8	Σ-LINK II Sequence Input Signal Monitor
SigmaLINK II Sequence Output Signal Monitor	Un1CA	Σ-LINK II Sequence Output Signal Monitor

SigmaWin+ Button in [Menu] Window: [Service Life]	SERVOPACK	
Name [Unit]	**Un No.**	**Name [Unit]**
Installation Environment Monitor − SERVOPACK	Un025	SERVOPACK Installation Environment Monitor [%]
Installation Environment Monitor − Servomotor *1	Un026	Servomotor Installation Environment Monitor [%]
Service Life Prediction Monitor − Built-in Fan	Un027	Built-in Fan Remaining Life Ratio [%]
Service Life Prediction Monitor − Capacitor	Un028	Capacitor Remaining Life Ratio [%]
Service Life Prediction Monitor − Surge Prevention Circuit	Un029	Surge Prevention Circuit Remaining Life Ratio [%]
Service Life Prediction Monitor − Dynamic Brake Circuit	Un02A	Dynamic Brake Circuit Remaining Life Ratio [%]
Maintenance Prediction Monitor - Bearings	Un183	Maintenance Prediction Monitor - Bearings
Maintenance Prediction Monitor - Oil Seal	Un184	Maintenance Prediction Monitor - Oil Seal

*1 This applies to the following motors. The display will show 0 for all other models.

- SGMXJ, SGMXA, SGMXP, SGMXG, SGM7M, SGM7D, SGM7E, SGM7F

SigmaWin+ Button in [Menu] Window: [Product Information]	SERVOPACK	
Name [Unit]	**Un No.**	**Name [Unit]**
Motor − Resolution	Un084	Linear Encoder Pitch (Scale pitch = Un084 × 10^{Un085} [pm])
	Un085	Linear Encoder Pitch Exponent (Scale pitch = Un084 × 10^{Un085} [pm])

SigmaWin+ Button in [Menu] Window: [Trace]	SERVOPACK	
Name [Unit]	**Un No.**	**Name [Unit]**
Main Circuit DC Voltage	Un023	Main Circuit DC Voltage

The following Un numbers are not displayed as monitors in SigmaWin+.

SERVOPACK	
Un No.	**Name [Unit]**
Un011	Polarity Sensor Signal Monitor
Un020	Motor Rated Speed [min^{-1}]
Un021	Maximum Motor Speed [min^{-1}]

Index

Σ-LINK II Data Monitor (2773h, 2774h) 657

Numerics

270-VDC power supply input 129
    wiring example..... 134–135
540-VDC power supply input 129
    wiring example..... 137

A

absolute encoder..... 261
    connection 144
    origin offset..... 220
    setup (initialization) 217
A.CC0..... 266
AC power supply input
    setting 178
acceleration rate reference unit 648
Acceleration User Unit (2703h) 648
additional adjustment functions 455
Additional Position Actual Value (60E4h)..... 676
alarm reset methods 730
alarm reset possibility..... 698
alarm tracing 517
ALM 236
ALM (Servo Alarm Output) signal 236
analog monitor connector 165
analog monitor factor 510
anti-resonance control adjustment 411
applicable communications standards 76
automatic detection of connected motor 180
Automatic Gain Switching..... 456
automatic notch filters 384
autotuning with host reference..... 388
autotuning without host reference..... 369

B

backlash compensation 465
base block (BB)..... 32
battery
    replacing the battery..... 695
/BK 201
/BK (Brake Output) signal 201
brake operation delay time 200
brake release delay time 200

C

CCW 181
CiA402 drive profile 76
clearing alarm history..... 732
/CLT..... 260
/CLT (Speed Limit Detection Output) signal..... 260
CN1 153
CN2 143
CN5 165
CN6A 162
CN6B 162
CN7 163–164
CN8 160
coasting 204
coasting to a stop 204
/COIN..... 240
/COIN (Positioning Completion Output) signal..... 240
communications connectors..... 76
compatible adjustment function 485
computer connector 163–164
connecting a safety function device..... 579
Controlword (6040h)..... 661
countermeasures against noise..... 119
Current Actual Value (6078h) 683
Current Control Mode Selection 464
current gain level setting 464
custom tuning 402
CW 181
Cyclic Sync Torque Mode..... 615
Cyclic Synchronous Position Mode..... 607, 679
Cyclic Synchronous Velocity Mode 613, 680

D

DC mode..... 591–592
DC power supply input
    setting 178
DC reactor
    connection terminal 127, 129
    wiring..... 141
decelerating to a stop..... 204
detecting errors in HWBB signal..... 572
detection timing for overload alarms (A.720) 207
detection timing for overload warnings (A.910) 207
device control 596
Diagnostic Output Circuits..... 161
diagnostic tool 489
digital inputs/outputs..... 617, 688
digital I/O signals..... 617, 688
Digital Inputs (60FDh) 688
Digital Outputs (60FEh)..... 688
DINT 584
Disable Operation Option Code (605Ch) 667
displaying the alarm history..... 731
Distributed Clocks..... 76
drive profile 76, 596
dynamic brake applied..... 204

E

Easy FFT 490
EDM1 575
EDM1 (external device monitor)..... 575
electronic gear 209
emergency message 594
encoder divided pulse output 248, 531
    setting 252
    signal 248
encoder resolution..... 210, 252
End Velocity (6082h) 680
Error Code (603Fh) 661
EtherCAT commands 76
EtherCAT communications..... 76
EtherCAT state machine 586
event
    event cycle..... 643
    reception event 645
    SYNC0 event..... 591
    synchronization event 591
    trigger event 618
event cycle..... 645
example of PDO data exchange timing in DC mode 592
exceeded interpolation speed 664
external regenerative resistor 223
external torque limits 257

F

Fault Reaction Option Code (605Eh)..... 667
feedback pulse counter 188

feedforward 485
Feedforward 386
feedforward compensation 485
FG 122, 153
first rotational coordinate 299
FMMU 76
Following Error Actual Value (60F4h) 675
Following Error Time Out (6066h) 675
Following Error Window (6065h) 674
forcing the motor to stop 283
forward direction 181, 530
free-run mode 591
friction compensation 385, 460
fully-closed system 526

G

G-SEL 456
gain switching 455
Gr.1 alarm 205
Gr.2 alarm 205
gravity compensation 462
grounding 122

H

Halt Option Code (605Dh) 667
hard wire base block (HWBB) 569–570
  detecting errors in HWBB signal 572
  HWBB signal specifications 572
  recovery method 570
holding brake 200
Home Offset (607Ch) 672
homing 609, 672
Homing Acceleration (609Ah) 673
Homing Method (6098h) 609, 672
homing mode 672
Homing Speeds (6099h) 673
HWBB 569
HWBB signal specifications 572
HWBB state 570
  recovery method 570
/HWBB1 161
/HWBB2 161

I

I-P control 477
input signal
  allocation 232
internal block diagram 79
internal torque limits 256
interpolation 607
interpolation position reference 677
interpolation position reference cycle 677
I/O signals 498
I/O signal
  allocation 230
I/O signals
  function 153
  monitor 504
  name 153
  Wiring example 156
INT 584
Interpolated Position Mode 603–604, 677
Interpolation data read/write pointer position monitor
  (2741h) 655
Interpolation Data Record (60C1h) 677
Interpolation data record for 1st profile (27C0h) 660
Interpolation data record for 2nd profile (27C1h) 660
Interpolation profile select (2732h) 654
Interpolation Submode Select (60C0h) 677
Interpolation Time Period (60C2h) 677

J

jogging operation 313

L

last rotational coordinate 299
LED indicator 76
less-deviation control function 446
line driver output circuit 158
linear encoder
  connection example 144
  feedback resolution 211
  setting scale pitch 183
linear servomotor 32
list of alarms 698
list of parameters 755
list of warnings 737
load level 344
low-frequency control function
  amplitude reduction type 483
  convergence high speed type 483

M

mailbox 76
main circuit cable 32
manual gain switching 456
manual tuning 471
Manufacturer interpolation data configuration for 1st profile
  (2730h) 652
Manufacturer Interpolation Data Configuration for 2nd Profile
  (2731h) 653
Manufacturer Serial Number (F9F0h) 691
Max Profile Velocity (607Fh) 670
Max. Torque (6072h) 684
maximum motor speed 247
mechanical analysis 489
mode switching (changing between P and PI control) 486
modes of operation 599, 668
Modes of Operation (6060h) 668
Modes of Operation Display (6061h) 668
moment of inertia estimation with a host reference 365
moment of inertia estimation without a host reference 348
momentary power interruption hold time 244
monitor factor 510
Motor Catalogue Number (6403h) 690
motor current detection signal
  automatic adjustment 279
  manual adjustment 281
  offset adjustment 279
motor direction setting 181
motor overload detection level 207
Motor Rated Torque (6076h) 682
multiturn limit 265, 299
multiturn limit disagreement 266

N

/N-CL 257
/N-CL (Reverse External Torque Limit Input) signal 257
N-OT 194
N-OT (Reverse Drive Prohibit Input) signal 194
/NEAR 241
/NEAR (Near Output) signal 241
Negative Torque Limit Value (60E1h) 684
noise filter wiring and connection precautions 120
noise filters 120
notch filters 474

O

object directory 589
object directory list 625
object list 824
operation for momentary power interruptions 244
operation monitor 498
origin search 324
Output distance setting (277Bh) 659
output function 295
Output function setting (2779h) 659
output phase form 249
output position 295
Output position correction setting (277Ch) 659
Output position setting (2778h) 659
output signal
    allocation 234
Output time setting (277Ah) 659
overheat protection 286
overheat protection input 153
overload alarm 207
overload detection level
    motor 207
overload warnings 207
overtravel 194
    alarm 196
    behavior selection after overtravel release 198
    warning 197

P

P control 477
/P-CL 257
/P-CL (Forward External Torque Limit Input) signal 257
P-OT 194
P-OT (Forward Drive Prohibit Input) signal 194
PAO 248, 531
parameter
    classification 170
    initialize settings 176
    parameters for numeric settings 33, 170
    parameters for selecting functions 33, 170
    setting procedure 172
    write prohibition setting 173
parameter recording table 844
PBO 248, 531
PCO 248, 531
PDO mapping 589, 633
    default setting 590
    object directory list 625
    setting procedure 589
PDO mapping objects 633
photocoupler input circuits 157
photocoupler output circuit 158
physical layer 76
PI control 477
polarity detection 191
polarity sensor 190
Position Actual Internal Value (6063h) 674
Position Actual Value (6064h) 674
Position Demand Internal Value (60FCh) 674
Position Demand Value (6062h) 674
position integral 488
position loop gain 472
Position Offset (60B0h) 675
Position Option Code (60F2h) 676
Position Range Limit (607Bh) 676
position reference unit 647
Position User Unit (2701h) 647
Position Window (6067h) 675
Position Window Time (6068h) 675
positioning completion width 240
Positive Torque Limit Value (60E0h) 684
Precautions for Safety Functions 568
preventative maintenance items 516
process data 76
Profile Acceleration (6083h) 671
Profile Deceleration (6084h) 671
profile position mode 600, 670
Profile Torque Mode 614
Profile Velocity (6081h) 671
Profile Velocity Mode 612, 680
program jogging 319
    operation pattern 319

Q

Quick Stop command 671
Quick Stop Deceleration (6085h) 671
quick stop function 666
Quick Stop Option Code (605Ah) 666

R

reactor
    DC reactor connection terminal 127, 129
    wiring DC reactors 141
Receive PDO Mapping 634
reception event 645
reference unit 209
regenerative resistor 223
    connected 140
regenerative resistor capacity 223
resetting the option module configuration error 733
reverse direction 530
risk assessment 569
rotary servomotor 32
rotational coordinate system 297
    block diagram 298

S

/S-RDY 238
/S-RDY (Servo Ready Output) signal 238
safety function
    connection example 576
    monitor 504
    safety functions 578
safety function input circuits 160
safety function signal 160
Safety Functions 567
scale pitch 183
selecting the phase sequence for a linear servomotor 188
selecting torque limits 256
self-configuration 542
SEMI F47 function 245
Sensing Data Monitor (2770h, 2771h, 2772h) 655
serial converter unit 183
servo drive 32
servo gains 471
servo lock 32
servo OFF 32
servo ON 32
servo system 32
servomotor 32
servomotor stopping method for alarms 205
servomotor stopping method for servo OFF 204
SERVOPACK 32
    inspections and part replacement 695
    part name 54

ratings 70
specification 75
status display 860
setting the origin 220
setting the position deviation overflow alarm level 339
setting the position deviation overflow alarm level at servo ON 341
setup parameter 170
SG 153
Shutdown Option Code (605Bh) 666
SigmaWin+ 32
signal allocation 230
single-phase, 200-VAC power supply input
setting 179
wiring example 134
sink circuits 157
SINT 584
Slave Information IF 76
SLO1 to SLO4 560
SO1 to SO3 560
soft start 304
software limit 255
Software Position Limit (607Dh) 670
software resetsoftware reset 274
source circuits 157
speed detection method selection 464
speed limit during torque control 242
speed loop gain 473
speed loop integral time constant 473
speed reference
filter 305
speed reference unit 648
spring opener 130
state machine control commands 597
status monitor 498
Statusword (6041h) 663
stopping by applying the dynamic brake 204
storage humidity 75
storage temperature 75
STRING 584
Supported Drive Modes (6502h) 668
surrounding air humidity 75
surrounding air temperature 75
Switching Condition A 456
Sync Error Settings (10F1h) 645
sync manager communication objects 642
Sync Manager Communication Type (1C00h) 642
Sync Manager PDO Assignment (1C10h to 1C13h) 642
Sync Manager Synchronization (1C32h, 1C33h) 643
SYNC0 event 591
synchronization event 591
synchronization with distributed clocks 591
SyncManager 76

T

Target Position (607Ah) 670
Target Torque (6071h) 682
Target Velocity (60FFh) 681
test without a motor 326
/TGON 237
/TGON (Rotation Detection Output) signal 237
TH 153
three-phase, 200-VAC power supply input 127
setting 179
wiring example 133
three-phase, 400-VAC power supply input 129
wiring example 136
Torque Actual Value (6077h) 682
Torque Demand Value (6074h) 682
torque limit 256
torque limit function 684
torque limits 616, 684
Torque Offset (60B2h) 679
torque reference filter 473
torque reference unit 648
Torque Slope (6087h) 682
Torque User Unit (2704h) 648
touch probe 618, 685
touch probetouch probetouch probe 618
touch probe
example of execution procedure 618
Touch Probe 1 Negative Edge (60BBh) 687
Touch Probe 1 Position Edge (60BAh) 686
Touch Probe 2 Negative Edge (60BDh) 687
Touch Probe 2 Position Edge (60BCh) 687
Touch Probe Function (60B8h) 685
Touch Probe Status (60B9h) 686
Transmit PDO Mapping 638
trial operation
trial operation with EtherCAT (CoE) communications 316
trigger event 618
triggers at preset positions
outline 289
troubleshooting alarms 703
troubleshooting warnings 738
tuning parameter 170
Tuning-less Function 343
tuning-less function
load level 346
response level 345

U

UDINT 584
UINT 584
USINT 584

V

/V-CMP 239
/V-CMP (Speed Coincidence Detection Output) signal 239
Velocity Actual Value (606Ch) 680
Velocity Demand Value (606Bh) 680
Velocity Offset (60B1h) 679
Velocity User Unit (2702h) 648
Velocity Window (606Dh) 680
Velocity Window Time (606Eh) 680
vibration detection level iInitialization 276
vibration detection level setting 341
vibration suppression 417
/VLT 242
/VLT (Speed Limit Detection Output) signal 242

W

/WARN 237
/WARN (Warning Output) signal 237
writing parameters 184

Z

zero clamping 204
zero-speed stopping 204

Revision History

The date of publication, revision code, revision number, and web revision number are given at the bottom right of the back cover. Refer to the following example.

Revision number

Revision code — Web revision number

MANUAL NO. SIEP C710812 02A <0>-0

Published in Japan August 2021

Date of publication

Date of Publication	Rev. Code	Rev. No.	Web Rev. No.	Section	Revised Contents
March 2025	G	<6>	0	All chapters	• Partly revised. • Addition: Information on the SGDXS-□□□D • Addition: Information on the advanced safety module • Addition: Information on gain 3 and gain 4 in gain switching • Addition: Information on the function to specify the output status when a host communications error occurs • Addition: Information on monitors related to brake control and sensing data
April 2024	F	<5>	0	All chapters	• Partly revised. • Addition: Information on Load Fluctuation Priority • Addition: Low-Frequency Control Function, Less-Deviation Control
March 2024	E	<4>	0	All chapters	Partly revised.
February 2023	D	<3>	0	8.8.5	Deletion: Operating procedure for multi-axis simultaneous tuning
				Chapters 14, 15, 17	Revision: Information on the touch probe
				All chapters	Partly revised.
				Back cover	Revision: Address
April 2022	C	<2>	0	All chapters	Addition: Information on SGDXS-590A, and -780A
					Addition: Information on SGMXA-15 to -70, SGMXP, SGMXG-03, -05, -1A, -1E, and SGM7M
					Partly revised.
				6.15, 15.5.7, 15.5.10 to 15.5.14	Addition: Triggers at preset positions
December 2021	B	<1>	0	5.10.4	Addition: Overtravel alarms
				6.15	Addition: Rotational coordinate system
				8.5.4	Addition: When the travel distance is less than 0.25 rotations (2.5 mm for a linear servomotor)
				8.8.5	Addition: Operating procedure for multi-axis simultaneous tuning
				8.12	Addition: Speed ripple compensation
				11.8	Addition: Changing detection conditions of alarms related to Σ-LINK II
				All chapters	Partly revised.
August 2021	A	<0>	0	–	First edition

Σ-X-Series AC Servo Drive

Σ-XS SERVOPACK with EtherCAT Communications References

Product Manual

IRUMA BUSINESS CENTER (SOLUTION CENTER)
480, Kamifujisawa, Iruma, Saitama, 358-8555, Japan
Phone: +81-4-2962-5151 Fax: +81-4-2962-6138
www.yaskawa.co.jp

YASKAWA AMERICA, INC.
2121, Norman Drive South, Waukegan, IL 60085, U.S.A.
Phone: +1-800-YASKAWA (927-5292) or +1-847-887-7000 Fax: +1-847-887-7310
www.yaskawa.com

YASKAWA ELÉTRICO DO BRASIL LTDA.
777, Avenida Piraporinha, Diadema, São Paulo, 09950-000, Brasil
Phone: +55-11-3585-1100 Fax: +55-11-3585-1187
www.yaskawa.com.br

YASKAWA EUROPE GmbH
Philipp-Reis-Str. 6, 65795 Hattersheim am Main, Germany
Phone: +49-6196-569-300 Fax: +49-6196-569-398
www.yaskawa.eu.com E-mail: info@yaskawa.eu.com

YASKAWA ELECTRIC KOREA CORPORATION
6F, 112, LS-ro, Dongan-gu, Anyang-si, Gyeonggi-do, Korea
Phone: +82-31-8015-4224 Fax: +82-31-8015-5034
www.yaskawa.co.kr

YASKAWA ASIA PACIFIC PTE. LTD.
30A, Kallang Place, #06-01, 339213, Singapore
Phone: +65-6282-3003 Fax: +65-6289-3003
www.yaskawa.com.sg

YASKAWA ELECTRIC (THAILAND) CO., LTD.
59, 1F-5F, Flourish Building, Soi Ratchadapisek 18, Ratchadapisek Road, Huaykwang, Bangkok, 10310, Thailand
Phone: +66-2-017-0099 Fax: +66-2-017-0799
www.yaskawa.co.th

YASKAWA ELECTRIC (CHINA) CO., LTD.
22F, Link Square 1, No.222, Hubin Road, Shanghai, 200021, China
Phone: +86-21-5385-2200 Fax: +86-21-5385-3299
www.yaskawa.com.cn

YASKAWA ELECTRIC (CHINA) CO., LTD. BEIJING OFFICE
Room 1011, Tower W3 Oriental Plaza, No.1, East Chang An Avenue,
Dong Cheng District, Beijing, 100738, China
Phone: +86-10-8518-4086 Fax: +86-10-8518-4082

YASKAWA ELECTRIC TAIWAN CORPORATION
12F, No. 207, Section 3, Beishin Road, Shindian District, New Taipei City 23143, Taiwan
Phone: +886-2-8913-1333 Fax: +886-2-8913-1513 or +886-2-8913-1519
www.yaskawa.com.tw

YASKAWA

YASKAWA ELECTRIC CORPORATION

In the event that the end user of this product is to be the military and said product is to be employed in any weapons systems or the manufacture thereof, the export will fall under the relevant regulations as stipulated in the Foreign Exchange and Foreign Trade Act. Therefore, be sure to follow all procedures and submit all relevant documentation according to any and all rules, regulations and laws that may apply.

Specifications are subject to change without notice for ongoing product modifications and improvements.

© 2021 YASKAWA Electric Corporation

MANUAL NO. SIEP C710812 02G <6>-0
Published in Japan March 2025
24-10-20
Original instructions